Oct. 9, 1962 G. H. ALPING 3,057,163

HYDRAULIC PRESSURE-MULTIPLIERS

Filed March 24, 1961

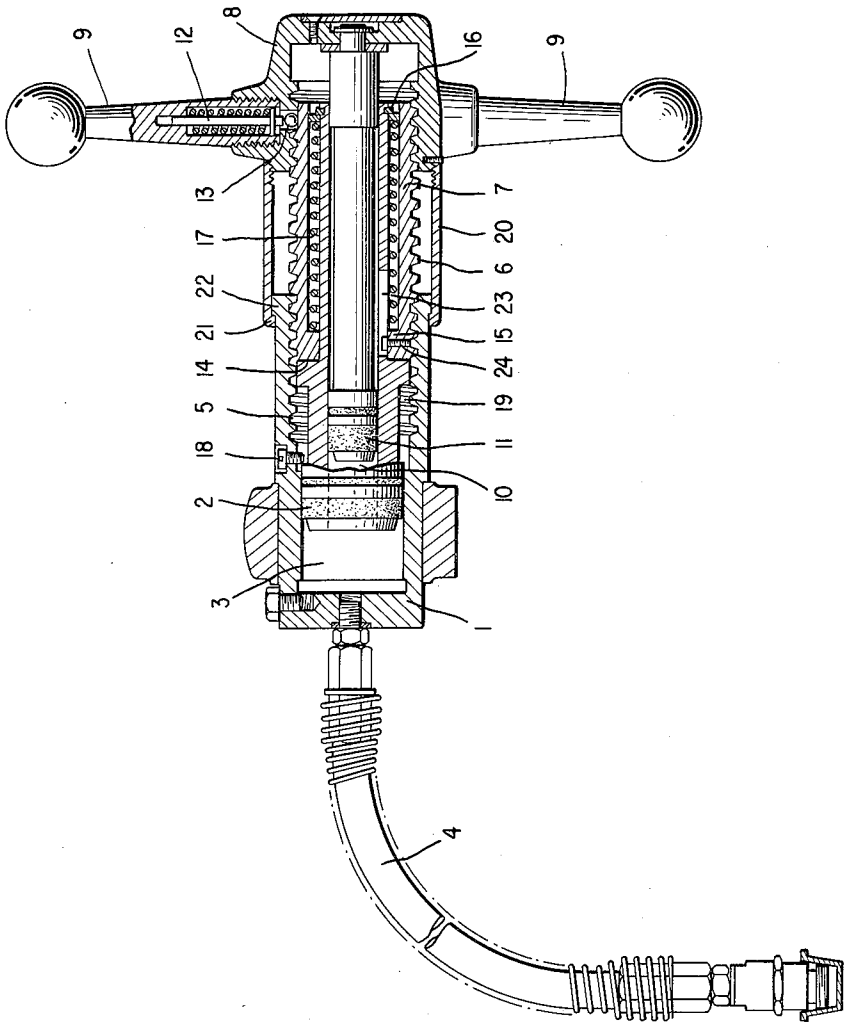

INVENTOR.
GUSTAV HENRY ALPING
BY
Imirie and Smiley
ATTORNEY

United States Patent Office 3,057,163 Patented Oct. 9, 1962

3,057,163

HYDRAULIC PRESSURE-MULTIPLIERS

Gustav Henry Alping, Enkoping, Sweden, assignor to Aktiebolaget Bahco, Stockholm, Sweden, a corporation of Sweden

Filed Mar. 24, 1961, Ser. No. 98,113
6 Claims. (Cl. 60—54.6)

The present invention relates to a hydraulic pressure-multiplier having two stages, a low-pressure stage and a high-pressure stage, of the kind comprising a low-pressure piston movable in a cylinder and provided with a central axial bore serving as a cylinder for a reciprocating high-pressure piston. The invention is especially adapted to be used for actuating the work-fastening jaws in machine tools and the like.

The object of this invention is to provide a two-stage hydraulic pressure-multiplier wherein the transition from one stage to the other takes place automatically at a predetermined pressure level.

This is achieved according to the present invention in that the low-pressure piston is actuated by a sleeve-like member provided with outer threads cooperating with inner threads in the rear end of the cylinder and with inner threads in a handle, to which the high-pressure piston is connected, said handle being provided with a locking device which normally connects the handle to the sleeve-like member, but when the pressure produced by the low-pressure piston has reached a predetermined value, releases the handle so that this can be screwed onto the sleeve-like member together with the high-pressure piston.

The invention will be further described in connection with the embodiment shown on the attached drawing, which shows a hydraulic pressure-multiplier in axial section.

In the embodiment illustrated, the hydraulic pressure-multiplier comprises a main cylinder **1** in which a low-pressure piston **2** is movable between which and the end wall of the cylinder the working chamber **3** of the pressure-multiplier is formed. This working chamber is by means of a hose **4** or the like connected to for instance a fastening device of a type known per se in machine tools, (not shown). A sleeve-like member **7** provided with outer threads **6** cooperates with inner threads **5** at the rear end of the cylinder **1**. A hand-wheel consisting of a hub **8** and arms **9** projecting therefrom is screwed onto the rear end of the sleeve-like member **7**. The piston **2** is provided with an axial bore **10** forming a cylinder for a high-pressure piston **11** cooperating therewith. This high-pressure piston **11** is with its rear end connected to the hub **8** of the hand-wheel so as to be rotatable but not axially movable with respect thereto. In one of the arms **9** of the hand-wheel a spring-loaded rod **12** is provided which acts on a locking ball **13** cooperating with an aperture in the thread at the rear end of the sleeve-like member **7**. The spring pressure acting on the ball **13** is suitably adjustable. The front end of the sleeve-like member **7** bears on an annular abutment edge **14** on the low-pressure piston **2** and a helical spring **17** is provided between an abutment edge **15** at the forward end of the member **7** and an abutment ring **16** at the rear end of the low-pressure piston **2**. In order to limit the rearward movement of the low-pressure piston **2** a stop-screw **18** is screwed through the cylinder wall and projects into an annular recess **19** in the low-pressure piston. The rearward movement of the hand-wheel **8, 9** is determined by the locking device **12, 13** and by a sleeve member **20** fixed to the hand-wheel and provided with a flange **21** which in the rear position cooperates with an annular abutment edge **22** at the rear end of the cylinder.

The mode of operation of the now described hydraulic pressure-multiplier is as follows.

When for instance a fastening device cooperating with the hydraulic pressure-multiplier shall fasten a workpiece or the like the hand-wheel **8, 9** is turned from the position shown on the drawing where the locking ball **13** is received in the recess provided therefor in the thread **6**, in such a direction that the sleeve-like member **7** is screwed into the cylinder **1** and thus moves the low-pressure piston **2** inwards. When thereby the pressure in the working chamber **3** and in the hose **4** has reached a certain value the resistance becomes so high that the locking ball **13** moves out of the recess against the action of the spring loaded rod **12**, so that on continued turning of the hand-wheel this is screwed forwards on the sleeve-like member **7**. This results in also the high-pressure piston **11** moving forward and carrying out its working stroke, the length of which is determined by the pressure desired in the hose **4**.

When later on the pressure shall be permitted to decrease, i.e. when the fastening device shall be loosened the hand-wheel is turned in the opposite direction, whereby firstly the hand-wheel returns to its rear end position together with the high-pressure piston **11** where the locking ball **13** enters into the recess in the thread **6**.

On continued turning of the hand-wheel the sleeve-like member **7** is screwed out of the cylinder so that the low-pressure piston **2** is permitted to move rearwards in the working chamber. The rearward movement of the member **7** is limited by the flange on the sleeve member **20** cooperating with the abutment edge **22**.

If for some reason the low-pressure piston **2** has got stuck in its forward position the hand-wheel can be turned in spite of this to such an extent in the rearward direction that the flange **21** will come into contact with the abutment edge **22**. This is possible on account of the fact that the sleeve-like member **7** is allowed to move in the axial direction relatively to the piston **2** against the action of the spring **17** but in this case the piston is turned together with the sleeve-like member by means of a pin **24** projecting into a groove **23** in the rear end of the piston. Thus the extra spring load as well as the turning of the piston **2** will assist in loosening the same. If furthermore the fastening device gets stuck this device is also of a very great importance as the piston already at a relatively small vacuum can stop in spite of continued turning of the hand-wheel, and this effectively prevents the occurrence of too great a vacuum which could result in air being sucked into the system.

The invention is not limited to the now shown and described embodiment but it can be changed in various ways within the scope of the invention.

I claim:

1. In a hydraulic pressure-multiplier having a low pressure stage and a high pressure stage of the type including a low pressure piston movable in an outer cylinder and provided with a central axial bore serving as an inner cylinder for a reciprocating high pressure piston, the improvement comprising a sleeve-like member provided with outer threads cooperating with inner threads in the rear end of said outer cylinder to move the low pressure piston, a handle having inner threads meshing with the threads of said member and connected with said high pressure piston, a locking device on said handle which normally connects the handle to the sleeve-like member but when the pressure produced by the low pressure piston has reached a predetermined value releases the handle to screw onto the sleeve-like member and move the high pressure piston with respect to the member and inner cylinder.

2. In a hydraulic pressure-multiplier the improvement

according to claim 1 wherein the locking device comprises a spring loaded locking ball cooperating with a recess in the sleeve-like member.

3. In a hydraulic pressure-multiplier the improvement according to claim 2 wherein the spring load acting on the locking ball is adjustable.

4. In a hydraulic pressure-multiplier the improvement according to claim 1 wherein the handle is provided with a sleeve projecting towards and surrounding the outer cylinder, said sleeve being provided with an annular flange which in the rear position of the handle cooperates with an abutment on the cylinder.

5. In a hydraulic pressure-multiplier the improvement according to claim 1 wherein the sleeve-like member is rotatably connected to the low pressure piston by a pin and slot connection rendering the low pressure piston movable axially relatively to the member only to a limited extent.

6. In a hydraulic pressure-multiplier the improvement according to claim 1 wherein the outer cylinder is provided with an abutment which limits the rearward movement of the low pressure piston.

References Cited in the file of this patent

UNITED STATES PATENTS

2,185,264	Mistral	Jan. 2, 1940
2,803,157	Seitter	Aug. 20, 1957

FOREIGN PATENTS

231,829	Switzerland	July 17, 1944