(12) INTERNATIONAL APPLICATION PUBLISHED UNDER THE PATENT COOPERATION TREATY (PCT)

(19) World Intellectual Property Organization
International Bureau

(43) International Publication Date
26 February 2004 (26.02.2004)

PCT

(10) International Publication Number
WO 2004/016180 A2

(51) International Patent Classification[7]: A61B 17/04

(21) International Application Number:
PCT/US2003/025377

(22) International Filing Date: 14 August 2003 (14.08.2003)

(25) Filing Language: English

(26) Publication Language: English

(30) Priority Data:
60/403,555 14 August 2002 (14.08.2002) US
60/449,465 24 February 2003 (24.02.2003) US

(71) Applicant: **SCIMED LIFE SYSTEMS, INC.** [US/US]; One Scimed Place, Maple Grove, MN 55311-1566 (US).

(72) Inventors: **CHU, Michael, S., H.**; 121 Browne Street, Brookline, MA 02446 (US). **INTOCCIA, Alfred**; 8 Conifer Lane, Amherst, NH 03031 (US). **MCGRATH, Michael, G.**; 19 Ostego Drive, Hudson, MA 01749 (US). **SLANDA, Jozef**; 24 Claudette Drive, Milford, MA 01757 (US).

(74) Agent: **MOORE, Ronda, P.**; Testa, Hurwitz & Thibeault, LLP, High Street Tower, 125 High Street, Boston, MA 02110 (US).

(81) Designated States *(national)*: AE, AG, AL, AM, AT, AU, AZ, BA, BB, BG, BR, BY, BZ, CA, CH, CN, CO, CR, CU, CZ, DE, DK, DM, DZ, EC, EE, ES, FI, GB, GD, GE, GH, GM, HR, HU, ID, IL, IN, IS, JP, KE, KG, KP, KR, KZ, LC, LK, LR, LS, LT, LU, LV, MA, MD, MG, MK, MN, MW, MX, MZ, NI, NO, NZ, OM, PG, PH, PL, PT, RO, RU, SC, SD, SE, SG, SK, SL, SY, TJ, TM, TN, TR, TT, TZ, UA, UG, UZ, VC, VN, YU, ZA, ZM, ZW.

(84) Designated States *(regional)*: ARIPO patent (GH, GM, KE, LS, MW, MZ, SD, SL, SZ, TZ, UG, ZM, ZW), Eurasian patent (AM, AZ, BY, KG, KZ, MD, RU, TJ, TM), European patent (AT, BE, BG, CH, CY, CZ, DE, DK, EE, ES, FI, FR, GB, GR, HU, IE, IT, LU, MC, NL, PT, RO, SE, SI, SK, TR), OAPI patent (BF, BJ, CF, CG, CI, CM, GA, GN, GQ, GW, ML, MR, NE, SN, TD, TG).

Published:
— *without international search report and to be republished upon receipt of that report*

For two-letter codes and other abbreviations, refer to the "Guidance Notes on Codes and Abbreviations" appearing at the beginning of each regular issue of the PCT Gazette.

WO 2004/016180 A2

(54) Title: MEDICAL IMPLANT

(57) Abstract: A medical assembly includes an implant and an envelope at least partially enclosing a portion of the implant. The envelope may include a tongue to protect the implant, a scaffold to provide integrity to the envelope, a tab access to ease envelope withdrawal, and/or one or more discontinuities to ease envelope withdrawal.

MEDICAL IMPLANT

Cross-Reference to Related Applications

[0001] This application is based on and claims priority to provisional patent application Serial No. 60/403,555 filed in the United States Patent Office on August 14, 2002 and provisional patent application Serial No. 60/449,465 filed in the United States Patent Office on February 24, 2003. The entire contents of each of these two provisional applications are incorporated by reference herein. This application is a continuation-in-part application of United States patent application Serial Nos. 10/093,371, 10/093,398, 10/093,424, 10/093,450, 10/093,498, and 10/094,352 filed in the United States Patent Office on March 7, 2002, which claim benefit of and priority to provisional patent application Serial No. 60/274,843 filed in the United States Patent Office on March 9, 2001 and provisional patent application Serial No. 60/286,863 filed in the United States Patent Office on April 26, 2001. The entire contents of these six nonprovisional applications are incorporated by reference herein.

Technical Field

[0002] The invention relates generally to implanting a device such as a surgical sling at an anatomical site in the body of a mammal. More particularly, the invention relates to delivering and placing the surgical sling (entirely or partially within an envelope or a sheath) at an anatomical site in the body of a female patient or a male patient.

Background Information

[0003] It is known to use a surgical sling to repair and restore living tissue. For example, surgical slings may be used to support and/or reinforce a damaged or weakened portion in the body of a patient. A sling used for such a purpose generally is made sufficiently porous to allow for growth of tissue through the mesh after implantation. The healing tissue grows through openings in, for example, an implanted synthetic mesh, thereby assimilating the tissue with the mesh and adding structural integrity to the tissue.

[0004] Surgical slings may be produced with yarns including monofilament and multifilament yarns. Multifilament yarns have small void areas or interstitial spaces between the yarn

filaments. The yarns in the surgical sling may be made of materials such as polypropylene and polyesters.

Summary of the Invention

[0005] The crevices and voids of a surgical sling may harbor bacteria or other pathogens that contaminate the surgical sling during implantation. Following implantation of the surgical sling in the patient, the bacteria or other pathogens harbored in the sling are introduced to the anatomical site where the sling is implanted. Typically, the anatomical site being repaired is poorly accessible to antimicrobial drugs applied intraoperatively to combat bacteria or other pathogens that may be picked up and introduced to the anatomical site during the surgery to implant the mesh.

[0006] The invention relates to an implant, such as a surgical sling or mesh, for implantation at an anatomical site in the body of a patient, such as at the mid-urethra. The implant can be disposed within an envelope or a sheath for delivery to and placement at the anatomical site, and such a combination (of an implant and an envelope) is referred to herein as an implant assembly. Implants and implant assemblies according to the invention are relatively inexpensive, provide effective therapy, and require minimal training before use. Implants and implant assemblies according to the invention can be used to treat female urinary incontinence, including stress incontinence, for example. The invention also relates generally to methods of making and using implants and implant assemblies.

[0007] The invention, in one embodiment, addresses deficiencies in the prior art by providing an implant assembly that reduces or prevents contamination of the implant and contamination of the patient's tissue during delivery of the implant assembly to the anatomical site. An operator can adjust and position the implant assembly at the anatomical site in the patient's body and maintain the correct position of the implant at the anatomical site during and after withdrawal of an envelope, which at least partially encloses the implant. Also, the implant or implant assembly can be easily associated with a delivery device. The delivery device can be used to position the implant assembly (such as a sling in an envelope) at the patient's urethra. Transvaginal, transabdominal (e.g., percutaneous), supra-pubic, pre-pubic, or transobturator approaches can be used to install and position the implants and the implant assemblies. Without limitation, exemplary delivery devices and methodologies that may be employed in combination with the implant assemblies of the invention can be found in U.S. patent application serial Nos.

10/093,498, 10/093,398, 10/093,450, 10/093,371, 10/094,352, and 10/093,424 filed in the United States Patent Office on March 7, 2002, U.S. provisional patent application serial No. 60/418,827 filed in the United States Patent Office October 15, 2002, U.S. provisional patent application serial No. 60/418,642 filed in the United States Patent Office October 15, 2002, and U.S. provisional patent application serial No. 60/434,167 filed in the United States Patent Office December 17, 2002, the disclosures of which are incorporated herein by reference.

[0008] The U.S. patent application entitled "Medical Slings" by Rao *et al.* attorney docket number (BSC-265), the U.S. patent applications entitled "Systems, Methods and Devices Relating to Delivery of Medical Implants" by Chu *et al.*, attorney docket numbers (BSC-267-1; BSC-267-2; BSC-267-3; and BSC-267-4), the U.S. patent application entitled "Medical Slings" by Chu, attorney docket number (BSC-276), the U.S. patent application entitled "Spacer for Sling Delivery System" by Chu *et al.*, attorney docket number (BSC-278), and the Provisional patent application entitled "Surgical Slings" by Li *et al.*, attorney docket number (BSC-279PR) are all filed on even date herewith and are incorporated herein by reference in their entirety.

[0009] In one aspect, the invention provides an assembly for delivering an implant to an anatomical location in a body. According to this aspect, the assembly includes an envelope having two sleeves. The two sleeves of the envelope enclose the implant, such as a sling for the treatment of female urinary incontinence. In one embodiment, the assembly further includes a scaffold. The scaffold is sized and shaped to be enclosed within a lumen of the envelope. The scaffold is configured to couple the first sleeve and the second sleeve together. In one embodiment, each of the sleeves of the envelope is about the same length. In another embodiment, the scaffold includes a fold to form a hinge between the first and second sleeves. The scaffold may be manufactured, for example, from rigid or flexible materials.

[0010] In another aspect of the invention, at least one sleeve of the envelope includes a tongue, which overlaps at least a portion of the implant enclosed within the envelope. In one embodiment of this aspect of the invention, the tongue of the first sleeve is positioned within the lumen of the second sleeve. In some configurations, the tongue is an integral part of at least one sleeve.

[0011] In another aspect, the assembly includes a tab joined to the envelope. The tab may be a positioning member for positioning the implant in the body of the patient. In one embodiment of this aspect of the invention, the envelope includes a first sleeve section and a second sleeve

section which interoperate to enclose at least a portion of the implant. A tab on the end of the first sleeve section is passed through the first sleeve section to a first end of the envelope. A tab access for accessing the tab is located at the first end of the envelope. The tab is accessible through the tab access to position the implant in the patient's body. Similarly, a tab on the end of the second sleeve section is passed through the second sleeve section to a second end of the envelope and the tab is accessible through a tab access located at the second end of the envelope. In one embodiment, the tab access is a linear cut through at least one sleeve from the outside of the sleeve, into the lumen of the sleeve. Alternatively, the tab access is a perforation or a series of perforations through the sleeve.

[0012] In another aspect, the assembly includes an envelope with one or more sleeves having a first side and a second side. The envelope encloses at least a portion of an implant, for example, a sling having a length and a width. The first side of the envelope includes at least one discontinuity that exposes the width along a first portion of the sling. In one embodiment, the discontinuity is a gap disposed between the first and second portions of the first side of the envelope. The mid-length portion of the sling is devoid of covering (*e.g.*, not enclosed) by the envelope. This mid-length portion of the sling may be de-tanged. In another embodiment, the first side of the envelope has a first slit-shaped aperture and a second slit-shaped aperture. The first and second slit-shaped apertures may be intermediately located along the length of the sling. The sling that is at least partially enclosed by the envelope threads out of the envelope through the first slit-shaped aperture and threads back into the envelope through the second slit-shaped aperture, which creates a mid-length envelopeless sling loop that is external to the envelope. The mid-length envelopeless sling loop may be de-tanged and is devoid of covering, e.g., external to the envelope.

[0013] Additional embodiments of the assembly according to the invention include at least one loading member included on an end of an envelope. The loading member facilitates interoperability of the envelope with a delivery device. The loading member may be bonded to the implant, the envelope, the scaffold, or some combination. The loading member may be, for example, a guide member, a guide tube, or some other type of male or female structure (such as a hook, loop, etc.) disposed at an end of the envelope for mating with a complementary structure on the delivery device. At least one of the sleeves of the envelope may be manufactured from a composite of two or more materials. In one embodiment, the two sleeves of the invention are

joined by a hinge. The envelope of the delivery device may include a visual indication mark, for example, a spacer, a clamp, a tinted area or other indication mark that provides a visual indication of the placement of the sling delivery device, *i.e.*, the envelope and/or implant. The visual indication may be employed to inform the operator about the orientation of, for example, the sling.

[0014] In another aspect, the invention relates to a method for delivering an implant assembly in a patient's body. In one embodiment, an assembly is provided that includes an envelope having at least two sleeves that enclose at least a portion of the implant. In a further embodiment, the assembly includes a scaffold that is sized and shaped to fit within the lumen of the envelope. In another embodiment of this aspect of the invention, at least one of the sleeves has a tongue portion that overlaps the implant. In yet another embodiment, the assembly includes an envelope having at least one tab passed through a sleeve section to an end of the envelope and at least one tab access for accessing the tab that is located at an end of the envelope.

[0015] In one embodiment, the implant assembly is positioned at the anatomical site in the patient's body. When the operator is satisfied with the position of the implant assembly, the envelope is withdrawn from the patient's body. The envelope may be withdrawn from the patient's body by pulling the tabs and pulling the hinge and the remaining portions of the envelope from the body of the patient. Preferably, the implant assembly is positioned at the mid urethra and a tab on a first sleeve section of an envelope is pulled through the tab access on an end of the envelope. The pulled tab tears a portion of the envelope away from the implant and a hinge section is pulled intravaginally to withdraw the envelope from a patient's body. The envelope may also be withdrawn by cutting the tab accesses, separating the envelope into two sides along the cut tab access, accessing the internal tabs, pulling the internal tabs, and pulling the hinge and remaining portions of the envelope intravaginally from the body of the patient via the vagina. In another embodiment, the envelope may be withdrawn by cutting the hinge section and separating the first sleeve from the second sleeve. Alternatively, the envelope may be withdrawn by cutting the scaffold and separating the first sleeve from the second sleeve. In another embodiment, the envelope may be withdrawn by cutting and separating the external tabs or the loading members, separating the first sleeve from the second sleeve and scaffold, separating the second sleeve from the scaffold, then pulling the scaffold from the body of the patient. After withdrawal of the envelope, the implant remains where it was positioned at the

anatomical site, for example, at the mid-urethra of the patient to treat female urinary incontinence.

[0016] The foregoing and other objects, aspects, features, and advantages of the invention will become more apparent from the following description and from the claims.

Brief Description of the Drawings

[0017] In the drawings, like reference characters generally refer to the same parts throughout the different views. Also, the drawings are not necessarily to scale, emphasis instead generally being placed upon illustrating the principles of the invention.

[0018] FIG. 1A illustrates one embodiment of an assembly for delivering an implant to a body.

[0019] FIG. 1B illustrates an embodiment of one of the sleeves illustrated in FIG. 1A.

[0020] FIG. 1C illustrates a cross section at 1C-1C of the embodiment of the sleeve illustrated in FIG. 1B.

[0021] FIG. 1D illustrates an embodiment of one of the sleeves illustrated in FIG. 1A.

[0022] FIG. 1E illustrates a cross section at 1E-1E of the embodiment of the sleeve illustrated in FIG. 1D.

[0023] FIG. 1F illustrates another embodiment of one of the sleeves illustrated in FIG. 1A.

[0024] FIG. 1G illustrates a cross section at 1G-1G of the embodiment of the sleeve illustrated in FIG. 1F.

[0025] FIG. 1H illustrates one embodiment of a method for making the assembly for delivering an implant to a body illustrated in FIG. 1A.

[0026] FIG. 1I illustrates a top view of one embodiment of an assembly for delivering an implant to a body illustrated in FIG. 1A.

[0027] FIG. 1J illustrates one embodiment of a placement fork according to the invention.

[0028] FIG. 1K illustrates a cross section at 1K-1K of an embodiment of the assembly for delivering an implant to a body illustrated in FIG. 1I.

[0029] FIG. 1L illustrates an embodiment of a portion of the assembly for delivering an implant to a body illustrated in FIG. 1A.

[0030] FIG. 1M illustrates another embodiment of the assembly for delivering an implant to a body illustrated in FIG. 1A.

[0031] FIG. 2A illustrates another embodiment of an assembly for delivering an implant to a body.

[0032] FIG. 2B illustrates another embodiment of a portion of the assembly for delivering an implant to a body illustrated in FIG. 2A.

[0033] FIG. 2C illustrates another embodiment of an assembly for delivering an implant to a body illustrated in FIG. 2A.

[0034] FIG. 3A illustrates one embodiment of an assembly for delivering an implant to a body.

[0035] FIGS. 3B-3G illustrate one embodiment of a method of making an assembly for delivering an implant to a body illustrated in FIG. 3A.

[0036] FIG. 3H illustrates a top view of one embodiment of the assembly for delivering an implant to a body illustrated in FIG. 3A.

[0037] FIG. 3I illustrates a cross-section at 3I–3I of one embodiment of the assembly for delivering an implant to a body illustrated in FIG. 3H.

[0038] FIG. 4 illustrates another embodiment of an assembly for delivering an implant to a body.

[0039] FIG. 5A illustrates one embodiment of an assembly for delivering an implant to a body.

[0040] FIG. 5B illustrates a top view of one embodiment of a scaffold for use in the assembly illustrated in FIG. 5A for delivering an implant to a body.

[0041] FIG. 5C illustrates a side view of the scaffold illustrated in FIG. 5B.

[0042] FIG. 5D illustrates another embodiment of the scaffold for use in the assembly illustrated in FIG. 5A.

[0043] FIG. 5E illustrates another embodiment of one of the sleeves illustrated in FIG. 5A.

[0044] FIG. 5F illustrates another one of the sleeves for use in the assembly illustrated in FIG. 5A for delivering an implant to a body.

[0045] FIG. 5G illustrates one embodiment of a method of making the assembly for delivering an implant to a body illustrated in FIG. 5A.

[0046] FIG. 5H illustrates a top view of one embodiment of the assembly for delivering an implant to a body illustrated in FIG. 5A.

[0047] FIG. 5I illustrates a cross-section at 5I-5I of one embodiment of the assembly for delivering an implant to a body illustrated in FIG. 5H.

[0048] FIG. 6 illustrates a fragmented plan view of another embodiment of an assembly for delivering an implant to a body.

[0049] FIG. 7 illustrates a fragmented plan view of another embodiment of an assembly for delivering an implant to a body.

Description

[0050] In general, the invention described herein is an assembly for implanting an implant into the body of a patient. Referring to FIGS. 1A, 2A, 3A, 4, 5A, 6, and 7 in one aspect, the assembly 120 includes an envelope 20 enclosing an implant for example a sling 10. In accordance with the assembly 120 of the invention, an implant (for example, a surgical sling 10 formed from a mesh or other suitable material) can be entirely surrounded by or enclosed within the envelope 20, or only partially covered by the envelope 20.

[0051] In one embodiment according to the invention, the implant is a surgical mesh. The surgical sling 10 may be fabricated from one or more yarns and the yarns may be made from one or more materials. Materials that may be employed include polypropylene, polyesters, polyolefins, polytetrafluoroethylene, polyethylene, polyurethanes, nylons, and co-polymers, without limitation such as those described in U.S. Patent No. 6,042,592, the entirety of which is incorporated by reference herein. The sling 10 may also be a hybrid of synthetic materials and tissues. The sling 10 may also be made from absorbable materials, such as, polyglycolic acid, polylactic acid and other suitable absorbable materials. Exemplary slings 10 that may be employed with the invention are described in, for example, United States Patent Application Serial No. 09/916,983 filed July 27, 2001, provisional patent application Serial No. 60/388,109 filed June 12, 2002, United States Patent Application Serial No. 10/460,112 filed June 12, 2003, United States Patent Application Serial No. 10/092,872 filed March 7, 2002, provisional patent application Serial No. 60/449,465 filed February 24, 2003, and provisional patent application Serial No. 60/465,722 filed April 25, 2003 the entirety of all of which are incorporated by reference herein. Other exemplary slings 10 that may be employed with the invention are described in the U.S. patent application entitled "Medical Slings" by Rao *et al.* attorney docket

number (BSC-265), and U.S. patent application entitled "Medical Slings" by Chu, attorney docket number (BSC-276) filed on even date herewith, the entirety of both of which are incorporated herein by reference.

[0052] The assembly 120 of the invention, which includes the envelope 20 and the sling 10, may further include one ore more spacers (not shown). Exemplary spacers that may be employed with the invention are described, for example, in provisional patent application Serial No. 60/434,167 filed December 17, 2002, provisional patent application Serial No. 60/449,465 filed February 24, 2003 and in the U.S. patent application entitled "Spacer for Sling Delivery System" by Chu *et al.* attorney docket number (BSC-278) filed on even date herewith, the entirety of all of which are incorporated herein by reference.

[0053] Each of the one or more yarns used to make the sling 10 may include a plurality of filaments. Alternatively, a monofilament yarn may be employed. In one embodiment, the sling 10 is formed from a mesh and the mesh may be a polypropylene monofilament tricot mesh for use in surgical applications. Within the mesh, each yarn may have void areas between yarn filaments. The process used to fabricate the mesh may create crevices in the mesh. Multifilament yarns have multiple voids or interstitial spaces between the yarn filaments. Mesh, according to the invention, may be produced according to a variety of fabrication processes known to the skilled artisan including, but not limited to, knitting, weaving, or braiding. Meshes fabricated using multifilament yarns may have both crevices and interstitial voids. According to the illustrative embodiment of the invention, the surgical mesh is enclosed within the envelope 20 that entirely or partially surrounds the surgical mesh. The envelope 20 surrounding the mesh reduces the likelihood that the mesh will become contaminated with foreign matter, such as bacteria, during mesh placement at an anatomical site in the body of the patient.

[0054] The illustrative envelopes 20 may be of varying construction, for example, the envelope 20 may be used to assist in handling the sling 10 and/or to assist in adjusting the sling 10 during surgical placement. The envelope 20 also aids in preventing the sling 10 from stretching or becoming misshapen due to handling prior to placement at the anatomical site. The envelope 20 may be likened to a pouch or a sleeve that partially or entirely surrounds the sling 10. The thickness of the material used to make the envelope 20 may range from about 0.0001 inch to about 0.01 inch, preferably being about 0.0003 inch thick. In the illustrative embodiment, the envelope 20 defines a lumen 185 through which at least a portion of the sling 10 can pass.

[0055] The material used to make the envelope 20 may be selected from the group including polypropylene, polyethylene, polyester, polytetrafluoroethylene (e.g., TEFLON®), TYVEK®, MYLAR®, and co-polymers, thereof. In one embodiment according to the invention, the material used to make the envelope 20 is an absorbent material, such as, for example, a sponge-like material. The envelope 20 may be pre-soaked in a solution containing a drug such as an antibiotic prior to surgical implantation of the implant 10 in a patient's body.

[0056] In some configurations sling 10 is made of a non-wettable material such as a polypropylene, polyethylene, polyester, polytetrafluoroethylene, TYVEK available from DuPont, PA, MYLAR available from DuPont, PA, or co-polymers thereof. Polytetrafluoroethylene, which is suitable for use in accordance with the present invention, is available from DuPont (Wilmington, Delaware, under the trade designation TEFLON). Such non-wettable materials do not take up any liquids, for example, therapeutic agents in solution.

[0057] To permit therapeutic agents to bond or absorb to these non-wettable material sides, the sling 10 may be treated with a substance that is wettable such as, for example, a wettable coating composition. The wettable coating composition may be a synthetic coating (e.g., polyvinylpyrrlidone or PVP), a natural coating (e.g., collagen) or a physically absorbent material (e.g., sponge comprising cellulose or open celled polyurethane). The wettable coating composition may be hydrophilic. Suitable hydrophilic coatings may be water soluble and include, for example, such coatings available under the trade designations Hydroplus and Hydropass. Similarly, a hydrophobic coating may be employed on one or more surfaces of the sling 10. Suitable hydrophobic coatings that may be employed in accordance with the invention include but are not limited to polytetrafluoroethylene, silicon, and Pyrelene.

[0058] Therapeutic agents may also be employed with sling 10. For example, the hydrophilic coating and the therapeutic agent are mixed to form a single coating. Alternatively, the therapeutic agents may be compressed into the material of the sling 10, rather than being applied as a coating.

[0059] The therapeutic agents can be, for example, hydrophilic or hydrophobic. Hydrophilic drugs that may be employed in accordance with the invention include oxybutynin chloride, lidocaine, ketorolac, ketorolac tromethamine, which is available under the trade designation Toradol from Roche Pharmaceuticals (Nutley, NJ) and hyoscyamine sulfate which is available under the trade designation CYTOSPAZ from Polymedica (Woburn, MA), for example.

Suitable hydrophobic drugs include but are not limited to ibuprofen, ketoprofen, and diclofenac. The drug can be mixed with the coating and applied with the coating. Where the bonding between the coatings and drugs is weak, the drug that is absorbed will readily release to be delivered to the sides it contacts. Alternatively, a stronger bonding affinity may provide a slower timed release of the drug.

[0060] Where the coating applied to the surface of the sling 10 has an ionic charge, drugs comprising a complementary charge will bond to the coating when the coating and the drug are exposed to one another. The strength of any bonding will impact how readily the drug is released from the sling 10. Where the ionic bonding between the coating and the drug is weak, the drug will release more readily. In embodiments where rapid drug release is desirable, covalent bonding between the side coating and the drug should be avoided.

[0061] In general, the therapeutic agent for use in connection with the present invention can be any pharmaceutically acceptable therapeutic agent. Preferred therapeutic agents include anti-inflammatory agents, analgesic agents, local anesthetic agents, antispasmodic agents, and combinations thereof.

[0062] Anti-inflammatory agents include steroidal and non-steroidal anti-inflammatory agents. Examples of non-steroidal anti-inflammatory drugs, include aminoarylcarboxylic acid derivatives such as enfenamic acid, etofenamate, flufenamic acid, isonixin, meclofenamic acid, mefanamic acid, niflumic acid, talniflumate, terofenamate and tolfenamic acid; arylacetic acid derivatives such as acemetacin, alclofenac, amfenac, bufexamac, cinmetacin, clopirac, diclofenac sodium, etodolac, felbinac, fenclofenac, fenclorac, fenclozic acid, fentiazac, glucametacin, ibufenac, indomethacin, isofezolac, isoxepac, lonazolac, metiazinic acid, oxametacine, proglumetacin, sulindac, tiaramide, tolmetin and zomepirac; arylbutyric acid derivatives such as bumadizon, butibufen, fenbufen and xenbucin; arylcarboxylic acids such as clidanac, ketorolac and tinoridine; arylpropionic acid derivatives such as alminoprofen, benoxaprofen, bucloxic acid, carprofen, fenoprofen, flunoxaprofen, flurbiprofen, ibuprofen, ibuproxam, indoprofen, ketoprofen, loxoprofen, miroprofen, naproxen, oxaprozin, piketoprofen, pirprofen, pranoprofen, protizinic acid, suprofen and tiaprofenic acid; pyrazoles such as difenamizole and epirizole; pyrazolones such as apazone, benzpiperylon, feprazone, mofebutazone, morazone, oxyphenbutazone, phenybutazone, pipebuzone, propyphenazone, ramifenazone, suxibuzone and thiazolinobutazone; salicylic acid derivatives such as acetaminosalol, aspirin, benorylate,

bromosaligenin, calcium acetylsalicylate, diflunisal, etersalate, fendosal, gentisic acid, glycol salicylate, imidazole salicylate, lysine acetylsalicylate, mesalamine, morpholine salicylate, 1-naphthyl salicylate, olsalazine, parsalmide, phenyl acetylsalicylate, phenyl salicylate, salacetamide, salicylamine o-acetic acid, salicylsulfuric acid, salsalate and sulfasalazine; thiazinecarboxamides such as droxicam, isoxicam, piroxicam and tenoxicam; others such as e-acetamidocaproic acid, s-adenosylmethionine, 3-amino-4-hydroxybutyric acid, amixetrine, bendazac, benzydamine, bucolome, difenpiramide, ditazol, emorfazone, guaiazulene, nabumetone, nimesulide, orgotein, oxaceprol, paranyline, perisoxal, pifoxime, proquazone, proxazole and tenidap; and pharmaceutically acceptable salts thereof.

[0063] Examples of steroidal anti-inflammatory agents (glucocorticoids) include 21-acetoxyprefnenolone, aalclometasone, algestone, amicinonide, beclomethasone, betamethasone, budesonide, chloroprednisone, clobetasol, clobetasone, clocortolone, cloprednol, corticosterone, cortisone, cortivazol, deflazacort, desonide, desoximetasone, dexamethasone, diflorasone, diflucortolone, difluprednate, enoxolone, fluazacort, flucloronide, flumehtasone, flunisolide, fluocinolone acetonide, fluocinonide, fluocortin butyl, fluocortolone, fluorometholone, fluperolone acetate, fluprednidene acetate, fluprednisolone, flurandrenolide, fluticasone propionate, formocortal, halcinonide, halobetasol priopionate, halometasone, halopredone acetate, hydrocortamate, hydrocortisone, loteprednol etabonate, mazipredone, medrysone, meprednisone, methyolprednisolone, mometasone furoate, paramethasone, prednicarbate, prednisolone, prednisolone 25-diethylaminoacetate, prednisone sodium phosphate, prednisone, prednival, prednylidene, rimexolone, tixocortal, triamcinolone, triamcinolone acetonide, triamcinolone benetonide, triamcinolone hexacetonide, and pharmaceutically acceptable salts thereof.

[0064] Analgesic agents include narcotic and non-narcotic analgesics. Narcotic analgesic agents include alfentanil, allylprodine, alphaprodine, anileridine, benzylmorphine, bezitramide, buprenorphine, butorphanol, clonitazene, codeine, codeine methyl bromide, codeine phosphate, codeine sulfate, desomorphine, dextromoramide, dezocine, diampromide, dihydrocodeine, dihydrocodeinone enol acetate, dihydromorphine, dimenoxadol, dimepheptanol, dimethylthiambutene, dioxaphetyl butyrate, dipipanone, eptazocine, ethoheptazine, ethylmethlythiambutene, ethylmorphine, etonitazene, fentanyl, hydrocodone, hydromorphone, hydroxypethidine, isomethadone, ketobemidone, levorphanol, lofentanil, meperidine,

meptazinol, metazocine, methadone hydrochloride, metopon, morphine, myrophine, nalbuphine, narceine, nicomorphine, norlevorphanol, normethadone, normorphine, norpipanone, opium, oxycodone, oxymorphone, papaveretum, pentazocine, phenadoxone, phenazocine, pheoperidine, piminodine, piritramide, proheptazine, promedol, properidine, propiram, propoxyphene, rumifentanil, sufentanil, tilidine, and pharmaceutically acceptable salts thereof.

[0065] Non-narcotic analgesics include aceclofenac, acetaminophen, acetaminosalol, acetanilide, acetylsalicylsalicylic acid, alclofenac, alminoprofen, aloxiprin, aluminum bis(acetylsalicylate), aminochlorthenoxazin, 2-amino-4-picoline, aminopropylon, aminopyrine, ammonium salicylate, amtolmetin guacil, antipyrine, antipyrine salicylate, antrafenine, apazone, aspirin, benorylate, benoxaprofen, benzpiperylon, benzydamine, bermoprofen, brofenac, p-bromoacetanilide, 5-bromosalicylic acid acetate, bucetin, bufexamac, bumadizon, butacetin, calcium acetylsalicylate, carbamazepine, carbiphene, carsalam, chloralantipyrine, chlorthenoxazin(e), choline salicylate, cinchophen, ciramadol, clometacin, cropropamide, crotethamide, dexoxadrol, difenamizole, diflunisal, dihydroxyaluminum acetylsalicylate, dipyrocetyl, dipyrone, emorfazone, enfenamic acid, epirizole, etersalate, ethenzamide, ethoxazene, etodolac, felbinac, fenoprofen, floctafenine, flufenamic acid, fluoresone, flupirtine, fluproquazone, flurbiprofen, fosfosal, gentisic acid, glafenine, ibufenac, imidazole salicylate, indomethacin, indoprofen, isofezolac, isoladol, isonixin, ketoprofen, ketorolac, p-lactophenetide, lefetamine, loxoprofen, lysine acetylsalicylate, magnesium acetylsalicylate, methotrimeprazine, metofoline, miroprofen, morazone, morpholine salicylate, naproxen, nefopam, nifenazone, 5' nitro-2' propoxyacetanilide, parsalmide, perisoxal, phenacetin, phenazopyridine hydrochloride, phenocoll, phenopyrazone, phenyl acetylsalicylate, phenyl salicylate, phenyramidol, pipebuzone, piperylone, prodilidine, propacetamol, propyphenazone, proxazole, quinine salicylate, ramifenazone, rimazolium metilsulfate, salacetamide, salicin, salicylamide, salicylamide o-acetic acid, salicylsulfuric acid, salsalte, salverine, simetride, sodium salicylate, sulfamipyrine, suprofen, talniflumate, tenoxicam, terofenamate, tetradrine, tinoridine, tolfenamic acid, tolpronine, tramadol, viminol, xenbucin, zomepirac, and pharmaceutically acceptable salts thereof.

[0066] Local anesthetic agents include amucaine, amolanone, amylocaine hydrochloride, benoxinate, benzocaine, betoxycaine, biphenamine, bupivacaine, butacaine, butaben, butanilicaine, butethamine, butoxycaine, carticaine, chloroprocaine hydrochloride, cocaethylene, cocaine, cyclomethycaine, dibucaine hydrochloride, dimethisoquin, dimethocaine, diperadon

hydrochloride, dyclonine, ecgonidine, ecgonine, ethyl chloride, beta-eucaine, euprocin, fenalcomine, fomocaine, hexylcaine hydrochloride, hydroxytetracaine, isobutyl p-aminobenzoate, leucinocaine mesylate, levoxadrol, lidocaine, mepivacaine, meprylcaine, metabutoxycaine, methyl chloride, myrtecaine, naepaine, octacaine, orthocaine, oxethazaine, parethoxycaine, phenacaine hydrochloride, phenol, piperocaine, piridocaine, polidocanol, pramoxine, prilocaine, procaine, propanocaine, proparacaine, propipocaine, propoxycaine hydrochloride, pseudococaine, pyrrocaine, ropavacaine, salicyl alcohol, tetracaine hydrochloride, tolycaine, trimecaine, zolamine, and pharmaceutically acceptable salts thereof.

[0067] Antispasmodic agents include alibendol, ambucetamide, aminopromazine, apoatropine, bevonium methyl sulfate, bietamiverine, butaverine, butropium bromide, n-butylscopolammonium bromide, caroverine, cimetropium bromide, cinnamedrine, clebopride, coniine hydrobromide, coniine hydrochloride, cyclonium iodide, difemerine, diisopromine, dioxaphetyl butyrate, diponium bromide, drofenine, emepronium bromide, ethaverine, feclemine, fenalamide, fenoverine, fenpiprane, fenpiverinium bromide, fentonium bromide, flavoxate, flopropione, gluconic acid, guaiactamine, hydramitrazine, hymecromone, leiopyrrole, mebeverine, moxaverine, nafiverine, octamylamine, octaverine, oxybutynin chloride, pentapiperide, phenamacide hydrochloride, phloroglucinol, pinaverium bromide, piperilate, pipoxolan hydrochloride, pramiverin, prifinium bromide, properidine, propivane, propyromazine, prozapine, racefemine, rociverine, spasmolytol, stilonium iodide, sultroponium, tiemonium iodide, tiquizium bromide, tiropramide, trepibutone, tricromyl, trifolium, trimebutine, n,n-1trimethyl-3,3-diphenyl-propylamine, tropenzile, trospium chloride, xenytropium bromide, and pharmaceutically acceptable salts thereof.

[0068] Two particularly preferred therapeutic agents for the practice of the present invention are (a) ketorolac and pharmaceutically acceptable salts thereof (e.g., the tromethamine salt thereof, sold under the commercial name Toradol®) and (b) 4-diethylamino-2-butynylphenylcyclohexylglycolate and pharmaceutically acceptable salts thereof (e.g., 4-diethylamino-2-butynylphenylcyclohexylglycolate hydrochloride, also known as oxybutynin chloride, sold under the commercial name Ditropan®).

[0069] The amount of the therapeutic agent present in the polymeric matrix is an amount effective to reduce the pain or discomfort associated with the medical device. Typically, the therapeutic agent is present in a polymeric matrix in a range from about 0.1% to about 30% by

weight of the polymeric matrix (including 0.1%, 0.2%, 0.5%, 1%, 2%, 3%, 4%, 5%, 6%, 7%, 8%, 9%, 10%, 11%, 12%, 13%, 14%, 15%, 16%, 17%, 18%, 19%, 20%, 21%, 22%, 23%, 24%, 25%, 26%, 27%, 28%, 29%, 30% and ranges between any two of these points, for instance, 0.1-10%, 10-20% and 20-30%, etc.). Where the oxybutynin chloride and ketorolac tromethamine are used a range of 2-20% is typical, more typically 5-15%.

[0070] Alternatively, other therapeutic agents as known to those in the field as useful to enhance the efficacy of the sling 10 or reduce adverse reactions to the sling 10, for example, are contemplated with respect to the invention.

[0071] After placing the envelope 20 and sling 10 combination at the anatomical site, the operator withdraws the envelope 20 from the patient's body. The method of envelope 20 withdrawal may vary according to the various envelope 20 constructions. In some embodiments, the envelope 20 may be withdrawn from the body without being torn. In other embodiments, the operator tears or cuts the envelope 20 prior to withdrawal.

[0072] In one illustrative embodiment, the envelope 20 of FIGS. 1A, 1H and 1K includes a first sleeve 20A, a second sleeve 20B, tabs 188, 198, tab accesses 153A, 153B, 163A and 163B and the envelope hinge 200. The tabs 188 and 198 are internal tabs enclosed within the envelope 20. The tab 188 may be accessed from the inside of the envelope 20 and pulled outside the envelope 20 via the tab access 153A. The envelope 20 encloses the sling 10. The tab accesses 153A and 153B simplify accessing the tabs 188 and 198 to enable withdrawal of envelope 20.

[0073] Referring to FIGS. 1B and 1C, sleeve 20A, includes an inner surface 30, an outer surface 40, a proximal end 154, a distal end 150, a first lumen 185A, a tab 188 coupled to a top section 150A, and a bottom section 150B. The sleeve 20A further includes the tab access 153A.

[0074] As shown in FIGS. 1B-1E, the tab access 153A and 153B may be one or more cuts 220A and 230A, respectively, disposed through a surface or a tearable region 222A of a sleeve 20A of envelope 20. The tearable region 222A includes a material that is easily torn open. Such easily torn materials include, but are not limited to, a material with a molecular orientation such as a linear low density polyethylene or linear polytetrafluoroethylene. The envelope 20 may be manufactured partially or entirely from these materials. For example, the envelope 20 may include sections including linear low density polyethylene along with sections including a series of perforations, cuts or apertures. Referring to FIGS. 1A, 1D and 1F, the envelope 20 includes a tearable region 222A and 222B with tabs 188 and 198, respectively, that may be torn away.

[0075] In one illustrative embodiment, referring again to FIGS. 1B-1D, the tab access 153A is formed from one or more perforations, apertures or cuts 220A that are disposed lengthwise along the length of the top surface 250A of the first sleeve 20A of envelope 20. In another exemplary embodiment (not shown) the tab access 153A may be placed transverse or at another angle relative to the length of a sleeve 20A of envelope 20.

[0076] In one illustrative embodiment, illustrated in FIGS. 1B-1D the tab access 153A includes the series of cuts 220A disposed on the top surface 250A along the length of sleeve 20A between one aperture, a first hole 151A, and another aperture, a second hole 152A. In another illustrative embodiment, the tab access 153B includes the series of cuts 230A disposed on the bottom surface 250B between one aperture, the first hole 151B, and another aperture, the second hole 152B. The diameter of the holes 151A, 152A, 151B and 152B may range between about 1/64 inches and about 1/4 inches, preferably being about 3/32 inches. In the illustrative embodiment, the sleeve 20A top surface 250A and bottom surface 250B have tab accesses 153A and 153B respectively. In another embodiment, either the top surface 250A or the bottom surface 250B of sleeve 20A has a tab access 153A or 153B.

[0077] FIGS. 1A, 1D and 1E illustrate another illustrative embodiment of the sleeve 20A of assembly 120. The tab 188 is coupled to the top section 150A and pulled into the first lumen 185A of sleeve 20A. In one illustrative embodiment, the tab 188 is positioned in the first lumen 185A between the first hole 151A and the second hole 152A of tab access 153A. In one embodiment, sleeve 20A has two first holes 151A and 151B, two second holes 152A and 152B, and the tab 188. Referring now to FIG. 1E, the first holes 151A and 151B may be positioned between about 0.5 inch to about 2 inches, preferably about 1.5 inches from the proximal end 154 of sleeve 20A. Each of the first holes 151A and 151B may be positioned at the same distance, or, alternatively, at different distances from the proximal end 154. The second holes 152A and 152B may be positioned between about 0.05 inch to about 1 inch, preferably about 0.5 inch from the proximal end 154 of sleeve 20A. Each of the second holes 152A and 152B may be positioned at the same distance, or, alternatively, at different distances from the proximal end 154. The tab 188 that is coupled to top section 150A and pulled into the first lumen 185A of sleeve 20A may be positioned between about 0.25 inch to about 1.75 inch, preferably about 1 inch from the proximal end 154 of sleeve 20A.

[0078] FIG. 1F illustrates a second sleeve 20B of the envelope 20 shown in FIG. 1A. For example, FIGS. 1F and 1G illustrate the sleeve 20B including an inner surface 30, an outer surface 40, a proximal end 160, a distal end 164, a second lumen 185B, a tab 198 coupled to a top section 160A, and a bottom section 160B. The sleeve 20B further includes the tab accesses 163A and 163B. The tab access 163A is formed from one or more perforations, apertures or cuts 220B disposed lengthwise along the length of the top surface 260A of sleeve 20B. Similarly, the tab access 163B is formed from one or more perforations, apertures or cuts 230B that are disposed lengthwise along the length of the bottom surface 260B of sleeve 20B. The tab accesses 163A and 163B may be placed transverse or at another angle relative to the length of sleeve 20B of envelope 20.

[0079] In one illustrative embodiment, the tab access 163A includes a series of cuts 220B disposed on the top surface 260A lengthwise along the length of sleeve 20B between one aperture, a first hole 161A, and another aperture, a second hole 162A. The tab access 163B includes a series of cuts 230B disposed on the bottom surface 260B lengthwise along the length of sleeve 20B between one aperture, a first hole 161B, and another aperture, a second hole 162B. The diameter of the holes 161A, 162A, 161B and 162B may range between about 1/64 inches and about 1/4 inches, preferably about 3/32 inches. In one embodiment, either the top surface 260A or the bottom surface 260B of sleeve 20B has a tab access 163A or 163B. In another embodiment, the tab 198 is coupled to the top section 160A and is pulled into the second lumen 185B of sleeve 20B such that the tab 198 is positioned in the second lumen 185B between the first holes 161A and 161B and the second holes 162A and 162B.

[0080] FIGS. 1F and 1G illustrate the sleeve 20B having two first holes 161A and 161B, two second holes 162A and 162B and the tab 198. Referring now to FIG. 1G, the first holes 161A and 161B may be positioned between about 0.5 inch to about 2 inches, preferably about 1.5 inches from the distal end 164 of sleeve 20B. Each of the first holes 161A and 161B may be positioned at the same distance, or, alternatively, at different distances from the distal end 164 of sleeve 20B. The second holes 162A and 162B may be positioned between about 0.05 inch to about 1 inch, preferably about 0.5 inch from the distal end 164 of sleeve 20B. Each of the second holes 162A and 162B may be positioned at the same distance, or, alternatively, at different distances from the distal end 164. The tab 198 that is coupled to top section 160A and pulled into the second lumen 185B of sleeve 20B may be positioned between the first holes

161A and 161B and the second holes 162A and 162B. In one embodiment, the tab 198 is positioned between about 0.25 inch to about 1.75 inch, preferably 1 inch from the distal end 164 of sleeve 20B. Referring now to FIGS. 1A, 1H, and 1K, the tab accesses 153A and 153B are positioned at the first end 201 of the envelope 20 and the tab accesses 163A and 163B are positioned at the second end 202 of envelope 20.

[0081] Referring now to FIG. 1H, the bottom section 150B of the first sleeve 20A is placed at about a 90° angle relative to the length of the first sleeve 20A. Similarly, the bottom section 160B of the second sleeve 20B is placed at about a 90° angle relative to the length of the second sleeve 20B. The sleeves 20A and 20B are aligned in proximity to one another such that the bottom sections 150B and 160B of sleeves 20A and 20B, respectively, face one another. Referring now to FIGS. 1A and 1K, the bottom sections 150B and 160B act as hinge sections when the bottom sections 150B and 160B are joined to one another by adhesive, staples, heat bonding or other means known to the skilled person to form hinge 200. In one embodiment, a clip (not shown) may be employed to join the bottom sections 150B and 160B, forming hinge 200.

[0082] As shown in FIG. 1I, the sleeves 20A and 20B form envelope 20 and the proximal end 154 of first sleeve 20A is positioned on the opposite end from the distal end 164 of the second sleeve 20B. The tab access 153A is located at a first end 201 of the envelope 20 and the tab access 163A is located at the second end 202 of the envelope 20. The tabs 188 and 198 are located at the first end 201 and the second end 202, respectively, of the envelope 20. The tab 188 is passed through the lumen 185A of sleeve 20A and is placed at the first end 201 of envelope 20 about the region of the tab access 153A and the tab 198 is passed through the lumen 185B of sleeve 20B and is placed at the second end 202 of envelope 20 about the region of the tab access 163A. Referring again to FIG. 1K, the bottom sections 150B and 160B of sleeve 20A and sleeve 20B form the hinge 200 of the envelope 20. The envelope 20 has a proximal end 154 and a distal end 164, formed by the proximal end 154 and distal end 164 of sleeves 20A and 20B, respectively. Referring again to FIG. 1I, the length of envelope 20, from the proximal end 154 to the distal end 164 ranges between about 4.0 inches to about 28.0 inches, or between about 12.0 inches and about 24.0 inches, most preferably 20.0 inches.

[0083] Referring now to FIGS. 1D, 1F and 1K, in a particular embodiment, the top section 150A is not fully pulled into the sleeve 20A, such that an overlap region 150C of the top section 150A

remains on the outer surface 40. Similarly, the top section 160A of sleeve 20B is not fully pulled into the sleeve 20B, such that an overlap region 160C of top section 160A remains on the outer surface 40. The overlap regions 150C and 160C range between about 0.04 inches to about 1.2 inches, preferably about 0.3 inches. The overlap region 160C of sleeve 20B of envelope 20 may lay on top of the overlap region 150C of sleeve 20A of envelope 20. The overlap regions 150C and 160C protect the sling 10 enclosed within envelope 20. For example, in embodiments of the invention where the envelope 20 is employed to implant a mid-urethral sling 10, the overlap regions 150C and 160C of the envelope 20 prevents the sling 10 from stretching caused by, for example, a hemostat inadvertently applied to the sling 10 during surgery.

[0084] In one embodiment, referring now to FIGS. 1D, 1F and 1K, the tab accesses, 153A, 153B, 163A and 163B or a portion of a tab access, for example one or more hole 151A, 152A, 151B and 152B and/or one or more cut 220A, 220B, 230A, and 230B may be employed to sterilize envelope 20 and/or the sling 10 enclosed therein. In one embodiment, ethylene oxide (ETO) gas is supplied to the lumen 185 of envelope 20 through a portion of or the entire tab access 153A, 153B, 163A or 163B. In one illustrative embodiment, ETO is be supplied into the first hole 151B of envelope 20 prior to operator placement inside the patient's body.

[0085] In one illustrative embodiment, referring now to FIG. 1J, a placement fork 170 is employed to position an implant, such as a sling 10, within envelope 20. The placement fork 170 has a fork handle 173 and fork prongs 171. In one embodiment, the placement fork 170 has one or more fork prongs 171. In another embodiment, the placement fork 170 has two or more fork prongs 171. The fork prongs 171 may be configured to have a pointed end 175. Alternatively, the fork prongs 171 may be configured with a flat end 175. In one embodiment, the fork prongs 171 are configured with a rounded end 175. In other embodiments, a fork prong 171 has a sharp end 175 or a dull end 175. Placement forks 170 may have multiple fork prongs 171 having different configurations.

[0086] In one embodiment, referring to FIGS. 1I, 1J and 1K, the placement fork 171 is employed to place a sling 10 for treatment of female urinary incontinence in sleeves 20A and 20B of envelope 20. Each of sleeves 20A and 20B measure 9.75 inches and the sling 10 measures 18 inches. The length of each fork prong 171 may range from about 0.300 inch to about 0.400 inch, preferably about 0.350 inch long. The diameter of each fork prong 171 may measure between about 0.028 inch to about 0.040 inch, preferably about 0.030 inch. In one embodiment, there are

two fork prongs 171 on the placement fork 170. In another embodiment, each fork prong 171 is spaced from about 0.090 inch to about 0.110 inch, preferably about 0.100 inch from the adjacent fork prong 171 on the placement fork 170. In one embodiment, the fork prongs 171 have rounded ends 175. The fork handle 173 length may range from about 10 inches to about 12 inches, preferably about 11 inches long.

[0087] The placement fork 170, including the handle 173 and fork prongs 171, may be configured to fit within the lumen 185 of envelope 20. The fork handle 173 and the fork prongs 171 of the placement fork 170 may be fabricated from various materials, including medical grade stainless steel, for example 304 stainless tool steel, or medical grade plastic, for example nylon or TEFLON®. In one embodiment, a material, such as a soft plastic, may be employed to cover the placement fork 170 handle 173 to provide ease of gripping and/or comfort to the operator using the placement fork 170.

[0088] Optionally, referring still to FIGS. 1J and 1K, when placing a sling 10, the overlap region 160C is pulled in the direction perpendicular to the envelope 20 and the overlap region 150C is pulled out of the lumen 185B of second sleeve 20B in the direction perpendicular to the envelope 20. The placement fork 170 may be held by the fork handle 173. The fork prongs 171 may be used to position the sling 10 inside envelope 20. The placement fork 170 may have one or more fork prongs 171. In one embodiment, the positioning fork 170 has two fork prongs 171.

[0089] In one illustrative embodiment, the implant, a sling 10, is pierced by the fork prongs 171 and positioned in the lumen 185B of second sleeve 20B of envelope 20. Thereafter, the sling 10 is positioned in the lumen 185A of first sleeve 20A of envelope 20. In another embodiment, the prongs 171 of the placement fork 170 are employed to position the sling 10 within the lumen 185B of the second sleeve 20B and within the lumen 185A of the first sleeve 20A, without piercing the sling 10. To ensure proper sling 10 placement within the lumen(s) 185A and 185B of the sleeves 20A and 20B, respectively, the length of the handle 173 of placement fork 170 may be selected according to the combined lengths of the sleeves 20A and 20B.

[0090] Referring again to FIG. 1K, the overlap regions 150C and 160C, cover the sling 10 enclosed within envelope 20. In another illustrative embodiment according to the invention, referring to FIG. 1K, the sling 10 is placed within the envelope 20 after the bottom sections 150B and 160B of sleeves 20A and 20B are joined to form hinge 200. Referring now to FIG. 1A, the tabs 208 and 218 are joined to the envelope 20 after the hinge 200 is formed. The tabs 208 and

218 are external to the envelope 20 and they are positioning members for positioning the envelope 20 inside the body of the patient. The tabs 208 and 218 are positioned at the proximal end 154 and the distal end 164 of envelope 20, respectively. The implant, for example the sling 10, may be manually inserted into lumen 185 of envelope 20. Alternatively, the sling 10 may be inserted into lumen 185 with the aid of a placement fork 170 described above with reference to FIG. 1J.

[0091] In another illustrative embodiment, referring to FIGS. 1K and 1J, the sling 10 is manually placed within the first lumen 185A of the first sleeve 20A and/or placed with the aid of the placement fork 170 or a grasping device, such as, for example, forceps. Thereafter, sleeve 20B is joined with the sleeve 20A to form the envelope 20, including the hinge 200. The remaining portion of the sling 10 may be placed within the second lumen 185B of sleeve 20B prior to or after forming the hinge 200.

[0092] In yet another embodiment, referring to FIGS. 1D, 1F and 1K the sling 10 is placed, via the tab accesses, 153A, 153B, 163A, and 163B, within the envelope 20 after the sleeves 20A and 20B are joined at hinge 200. According to this embodiment, referring also to FIGS. 1A and 1J, the sling 10 is inserted into, for example, cut 230B of tab access 163B manually and/or with the aid of a grasping device or the placement fork 170 and the sling 10 is positioned within lumen 185. In another embodiment, the sling 10 is placed within the envelope 20 via the tab accesses, 153A, 153B, 163A, and/or 163B after the sleeves 20A and 20B are joined at hinge 200, and after tabs 208 and 218 are joined to the envelope 20.

[0093] With reference to FIGS. 1L-1M, in another aspect the invention includes a method for positioning the sling 10 at an anatomical site in the body of a patient. According to one embodiment of this method of the invention, the operator positions the assembly 120 of the envelope 20 enclosing sling 10 at the anatomical site, for example, the urethra 999 or bladderneck of a female patient. Referring to FIG. 1L, the tab 188 and the tab access 153A are located at the first end 201 of the envelope. The operator accesses the tab 188 by pulling tab 188 through cut 220A of tab access 153A. Referring to FIG. 1M, the operator intravaginally grasps hinge 200 and simultaneously pulls the tab 188 in the direction indicated by arrow 189. The force exerted on tab 188 coupled to the top section 150A tears the envelope 20 along the top surface 250A of the first sleeve 20A. Thereafter, the top section 150A of sleeve 20A is torn away from the envelope 20 in a single piece to expose the implant sling 10. Tab 188, the top

section 150A, the top of sleeve 20A, and a portion of the proximal top section 154A are torn away from the envelope 20 and the implant sling 10 is exposed. The exposed portion of the sling 10 is adjacent the urethra 999.

[0094] Referring again to FIGS. 1A, 1F, 1I, 1K, and 1M, the operator similarly accesses tab 198 by pulling tab 198 through cut 220B of tab access 163A. The tab 198 and the tab access 163A are located at the second end 202 of the envelope 20. The operator intravaginally grasps hinge 200 and simultaneously pulls tab 198. The force exerted on tab 198 coupled to the top section 160A tears the envelope 20 along the top surface 260A of the sleeve 20B away from the envelope 20. The force exerted on tab 198 coupled to the top section 160A tears these portions of sleeve 20B away from the envelope 20. Thus, tab 198, the top section 160A, the top of sleeve 20B, and a portion of the distal top section 164A are withdrawn from envelope 20. The portion of the sling 10 previously enclosed by the envelope 20 is thereby exposed. Finally, the hinge 200 and the remainder of envelope 20 including the tabs 208 and 218 are withdrawn via the patient's vagina. The sling 10 remains inside the body of the patient at the anatomical site where the operator positioned the sling 10, for example, at the anatomical site of the urethra 999.

[0095] In another illustrative embodiment, FIGS. 2A-2C illustrate the envelope 20, described in accordance with FIGS 1A-1M, further including a first guide tube 350A and a second guide tube 350B. As illustrated in FIGS. 1K and 2A the assembly 120 includes the envelope 20 including first sleeve 20A, second sleeve 20B, tabs 188, 198, tab accesses 153A, 153B, 163A, and 163B, the envelope hinge 200, the envelope 20 enclosing all or part of sling 10. A first guide tube 350A is coupled to the proximal end 154 of first sleeve 20A and the second guide tube 350B is coupled to the distal end 164 of the second sleeve 20B of envelope 20. The first guide tube 350A, the proximal end 154, and the tab access 153A and the second guide tube 350B, the distal end 164, and the tab access 163A are positioned on opposite ends of the envelope 20 formed by sleeve 20A and sleeve 20B. The tab access 153A and 153B are positioned at the first end 201 of the envelope 20 and the tab accesses 163A and 163B are positioned at the second end 202 of the envelope 20.

[0096] The guide tubes 350A and 350B facilitate interoperability of the assembly 120 with a delivery device. Other structures that facilitate interoperability of the assembly 120 with a delivery device to introduce the assembly 120 to the body of the patient may be employed in accordance with the assembly 120 of the invention. Suitable configurations and structures

include, for example, loops, apertures, male and/or female connectors, guide tubes and the like. Such other structures that may be employed are described in more detail in the United States patent application Serial Nos. 10/093,371, 10/093,398, 10/093,424, 10/093,450, 10/093,498, and 10/094,352 filed in the United States Patent Office on March 7, 2002, which are based on and claim priority to provisional patent application Serial No. 60/274,843 filed in the United States Patent Office on March 9, 2001 and provisional patent application Serial No. 60/286,863 filed in the United States Patent Office on April 26, 2001, provisional patent application Serial No. 60/418,827 filed in the United States Patent Office on October 15, 2002, provisional patent application Serial No. 60/418,642 filed in the United States Patent Office on October 15, 2002, provisional patent application Serial No. 60/434,167 filed in the United States Patent Office on December 17, 2002, United States patent application Serial No. 10/325,125 filed December 19, 2002, provisional patent application Serial No. 60/449,465 filed in the United States Patent Office on February 24, 2003, provisional patent application Serial No. 60/465,722 filed in the United States Patent Office on April 25, 2003, and U.S. patent application entitled "Sling Delivery and Placement" by Chu *et al.*, attorney docket number (BSC-267) filed on even date herewith, the entirety of all of which are incorporated herein by reference.

[0097] Referring to FIGS. 2A-2C, the operator may employ the assembly 120 of the invention to position the implant at an anatomical site in the body of a patient. The operator will employ the first and second guide tube 350A and 350B to position the envelope 20 enclosing sling 10 at an anatomical site in the body of a patient. Other structures as described and incorporated herein above may be used to position the envelope 20 enclosing sling 10 at an anatomical site in the body of a patient. The envelope 20 may be positioned with the aid of a delivery device that may be employed to access the patient's urethra 999 according to supra-pubic, pre-pubic, transvaginal, or transobturator approaches. The operator positions the envelope 20 enclosing sling 10, at the anatomical site, for example, the urethra 999 or bladderneck. Referring to FIG. 2B, the operator accesses the tab 188 by pulling tab 188 through cut 220A of tab access 153A. Referring to FIG. 2C, the operator intravaginally grasps hinge 200 and simultaneously pulls the tab 188 in the direction indicated by arrow 189. The force on tab 188 coupled to the top section 150A tears the envelope 20 along the top portion of the first sleeve 20A. Thereafter, the top section 150A of sleeve 20A is torn away from the envelope 20 in a single piece to expose the implant sling 10. Tab 188, the top section 150A, the top surface 250A of sleeve 20A, and a

portion of the proximal top section 154A are torn away from the envelope 20 and the implant sling 10 is exposed. The exposed portion of the sling 10 is adjacent the urethra 999.

[0098] Referring now to FIGS. 1K, 1F and 2C, the operator similarly accesses tab 198 by pulling tab 198 through cut 220B of tab access 163A. The operator intravaginally grasps hinge 200 and simultaneously pulls tab 198. The force exerted on tab 198 coupled to the top section 160A tears these portions of sleeve 20B away from the envelope 20. Thus, tab 198, the top section 160A, the top surface 260A of sleeve 20B, and a portion of the distal top section 164A are withdrawn from envelope 20. The portion of the sling 10 previously enclosed is thereby exposed. Finally, the hinge 200 and the remainder of envelope 20 including the first guide tube 350A and the guide tube 350B are withdrawn via the patient's vagina. The sling 10 remains inside the body of the patient at the anatomical site where the operator positioned the sling 10, for example, at the anatomical site of the urethra 999.

[0099] Referring now to FIGS. 1D, 2B and 2C, in another illustrative embodiment, the tab accesses 153A and 153B include perforations (not shown) about the perimeter of the perpendicular axis 24A of sleeve 20A of envelope 20. The operator can access the tab 188 by grasping and withdrawing, for example, the guide tube 350A and the portion of the envelope 20 lying between the perforation and the envelope 20 proximal end 154. The tab 188 is thereby exposed and is accessible to the operator. In one embodiment, the envelope 20 tab access 153A has perforations about the perimeter of the perpendicular axis 24A of envelope 20 and also has a nick (not shown) at one or more portions of the perforated perimeter that enables the tab access 153A to be pulled or torn to expose the tab 188 enclosed within the envelope 20.

[0100] In yet another embodiment, referring now to FIGS. 1I, 1K, and 2A the tab access 153A and 153B includes shapes (not shown) cut out of one or more of the top surfaces 250A, 260A and bottom surfaces 250B, 260B of sleeves 20A and 20B, respectively. Suitable cut out shapes include, oval and triangle, and the triangular cut out shape may have, for example, rounded edges.

[0101] Referring now to FIGS. 1D, 1F, and 2A, in one illustrative embodiment for positioning the assembly 120 in the body of a patient, the envelope 20 enclosing an sling 10 is positioned inside the body of a patient. The tab access 153A, including a cut 220A disposed between the first hole 151A and the second hole 152A, and the tab access 153B, including a cut 230A disposed between the first hole 151B and the second hole 152B, are cut at position 437A. The

cut at position 437A cuts through the second holes 152A and 152B. The guide tube 350A and a portion of the envelope material are withdrawn. Thereafter, the sides of envelope 20 sleeve 20A are pulled apart by opening and separating each of the cuts 220A and 230A. In one embodiment, the sides of envelope 20 separate until the point where the first holes 151A and 151B are located. The first holes 151A and 151B may provide, for example, relief to the cuts 220A and 230A.

[0102] In another illustrative embodiment, tab accesses 163A, 163B on sleeve 20B are cut at position 437B and tab 198 is similarly accessed by separating the sides of the envelope 20. The guide tube 350B and a portion of the envelope are withdrawn.

[0103] According to this embodiment, after the sling 10 is positioned, the operator cuts the envelope 20 at position 437A, withdraws the first guide tube 350A, and separates the envelope 20 to provide accesses to the tab 188. The operator intravaginally grasps hinge 200 and simultaneously pulls the tab 188 and the force on tab 188 coupled to the top section 150A tears the envelope 20 along the top portion of the first sleeve 20A. The top section 150A of sleeve 20A is torn away from the envelope 20 in a single piece to expose the implant sling 10. Tab 188, the top section 150A, the top surface 250A of sleeve 20A, and a portion of the proximal top section 154A are torn away from the envelope 20 and the implant sling 10 is exposed. The exposed portion of the sling 10 is adjacent the anatomical site

[0104] The operator cuts the envelope 20 at position 437B, withdraws the second guide tube 350B, and separates the envelope 20 to provide accesses to the tab 198. The operator grasps hinge 200 and simultaneously pulls tab 198. The force exerted on tab 198 coupled to the top section 160A tears these portions of sleeve 20B away from the envelope 20. Thus, tab 198, the top section 160A, the top surface 260A of sleeve 20B, and a portion of the distal top section 164A are withdrawn from envelope 20. The portion of the sling 10 previously enclosed is thereby exposed. Finally, the hinge 200 and the remainder of envelope 20 are withdrawn via the vagina. This embodiment avoids guide tubes 350A and 350B being pulled back through the patient's body when the operator withdraws the remainder of the envelope. The sling 10 remains inside the body of the patient at the anatomical site where the operator positioned the sling 10.

[0105] Referring again to FIG. 2A, in another embodiment, the tab access 153A and 153B is a cut out shape, for example, an oval (not shown). In one embodiment, the cut out oval may be cut over positions 437A and 437B. When the operator cuts positions 437A, 437B withdrawing a portion of the envelope 20 and first guide tube 350A and a portion of the envelope 20 and a

second guide tube 350B. The portion of the envelope 20 below positions 437A and 437B may be separated until the point at the bottom of the oval, providing access to the tabs 188, 198 enclosed within the envelope 20.

[0106] In another aspect, the invention includes an assembly 120 for delivering the envelope 20 and an implant, for example, a sling 10 to an anatomical site in the body of a patient. In one embodiment, shown in FIG. 3A, the assembly 120 includes the envelope 20 including two or more sleeves 20A, 20B, one or more tabs 208, 218 and a tongue 155. The tongue 155 simplifies placement and/or withdrawal of the envelope 20 from inside the body of the patient and prevents damage to the sling 10 thereby maintaining the integrity of the sling 10 enclosed by the envelope 20.

[0107] Referring to FIG. 3D, generally, the tongue 155 is an extension of the top section 150A of the sleeve 20A. The tongue 155 extends from one end of the sleeve 20A. In one embodiment, the tongue 155 is separate, i.e., non-contiguous with the bottom section 150B of the sleeve 20A. In another embodiment, tongue 155 extends from the top section 150A beyond the lumen 185A of the sleeve 20A. The tongue may be flexible and it may be any flat shape, for example, rectangular or oval. The length of the tongue measures between about 0.2 inches and about 5 inches, preferably about 1 inch in length. The width of the tongue measures between about 0.1 inches and about 2.0 inches. The thickness of the tongue 155 is at least as thick as the sleeve from which the tongue is made. In another embodiment, the tongue 155 is bonded at an end of sleeve 20A, in such embodiments the tongue 155 thickness may be greater, less, or equal to the thickness of the sleeve 20A to which the tongue 155 is bonded. The tongue 155 may be bonded to sleeve 20A by adhesives, sutures, or heat bonding as well as by other bonding means known to the skilled person.

[0108] Referring now to FIG. 3B, in one embodiment of the invention, the tongue is made by cutting two angles into the first sleeve 20A, as indicated by the arrow 176 and arrow 178. The angles 176 and 178 are cut in the range of from about 40° to about 170°, or about 80° to about 130°, preferably about 110°, from the longitudinal axis 22A of the sleeve 20A illustrated in FIG. 3B. Preferably, the angles 176 and 178 are obtuse, ranging from greater than 90° to about 130° as measured from the longitudinal axis 22A on the side of the distal end 150 of the sleeve 20A. In one embodiment, the two angles 176 and 178 are cut into the first sleeve 20A for a distance between about 0.01 inch and about 0.05 inch, preferably about 0.04 inch into the sleeve 20A as

measured along the perpendicular axis 24A. Referring now to FIGS. 3A and 3D, the angles 176 and 178 and the depth of the cut into the sleeve 20A along the perpendicular axis 24A at which the angles 176 and 178 are placed, determines the placement of tongue 155 of envelope 20, by, for example, sizing or placing the tongue 155 to cover the sling 10 enclosed by envelope 20.

[0109] Referring to FIG. 3C, the distal end portion 150 of sleeve 20A is trimmed along the longitudinal axis 22A from the distal end 150 to angle 176 and from the distal end 150 to the angle 178. In general, the amount of the first sleeve 20A that is trimmed along the longitudinal axis 22A from the distal end 150 to each respective angle 176 and 178 is substantially the same. The first sleeve 20A has a first lumen 185A, and its structure is tube-like, and after the first sleeve 20A is trimmed, the distal end 150 portion has a top section 150A and a bottom section 150B. After the first sleeve 20A is trimmed, the longitudinal axis 22A of first sleeve 20A from the angle 178 to the end 150 of top section 150A, may measure between about 2.0 inches to about 14.0 inches, preferably about 10.0 inches. As illustrated in FIG. 3D, the top section 150A is trimmed along the perpendicular axis 24A forming a tongue 155 which measures between about 0.2 inches and about 5 inches, preferably about 1 inch in length as measured along the longitudinal axis 22A of envelope 20. The envelope 20 may be trimmed by employing, for example, a razor. The width of the tongue 155 measured along the perpendicular axis 24A of envelope 20, is sized so that it is equal to or smaller than the inner diameter of a second lumen 185B of the second sleeve 20B of envelope 20, illustrated in FIG. 3F. For example, the width of the tongue 155 may measure between about 0.1 inches and about 2.0 inches.

[0110] Referring now to FIGS. 3E and 3F, the second sleeve 20B of the envelope 20 shown in FIG. 3A is illustrated. Referring to FIG. 3E, the second sleeve 20B has the inner surface 30, the outer surface 40, the proximal end 160, and the distal end 164. The second sleeve 20B includes the second lumen 185B. The length of the second sleeve 20B between the proximal end 160 and the distal end 164, along the longitudinal axis 22B, is between about 4.0 inches and about 28.0 inches, preferably about 20.0 inches. The perpendicular axis 24B of second sleeve 20B measures between about 0.2 inches to about 2.0 inches, preferably between about 0.4 inches and about 0.8 inches, preferably about 0.6 inches.

[0111] Still referring to FIG. 3E, the two angles 176,178, are cut into the second sleeve 20B in the range of about 40° to about 170°, or about 80° to about 130°, preferably about 90° from the longitudinal axis 22B of second sleeve 20B proximal end 160. In one embodiment, the two

angles 176 and 178 are cut into the second sleeve 20B for a distance between about 0.01 inch and about 0.05 inch, preferably about 0.04 inch into the sleeve 20A as measured along the perpendicular axis 24B. The second sleeve 20B is trimmed along the longitudinal axis 22B from the proximal end 160 to the angle 176 and from the proximal end 160 to the angle 178. In general, the amount of the second sleeve 20B that is trimmed along the longitudinal axis 22B from the proximal end 160 to each respective angle, 176 and 178, is substantially the same. The second sleeve 20B second lumen 185B includes a tube-like structure. Referring now to FIGS. 3E and 3F, after the tube-like second sleeve 20B is trimmed, the proximal end 160 includes a top section and a bottom section 160B. Referring now to FIG. 3F, the longitudinal axis 22B of second sleeve 20B from the angle 176 and the angle 178 to the end of bottom section 160B may measure between about 2.0 inches to about 14.0 inches, preferably about 10.0 inches. The top section is trimmed along the perpendicular axis 24B of sleeve 20B, from the legs of angles 176 and 178, which are at an angle to the longitudinal axis 22B of sleeve 20B.

[0112] As shown in FIGS. 3D, 3F, and 3G, the bottom section 150B of the first sleeve 20A is placed at about a 90° angle relative to the longitudinal axis 22A of the first sleeve 20A. Similarly, the bottom section 160B of the second sleeve 20B is placed at about a 90° angle relative to longitudinal axis 22B of the second sleeve 20B. The sleeves 20A and 20B are aligned in proximity to one another such that the bottom sections 150B and 160B of sleeves 20A and 20B, respectively, face one another.

[0113] Referring now to FIG. 3I, the bottom sections 150B and 160B are joined to one another by adhesive, staples, heat bonding or other means known to the skilled person to form hinge 200. In one embodiment, a clip (not shown) may be employed to join bottom sections 150B and 160B, which act as hinge sections when they form hinge 200. As shown in FIG. 3H, the proximal end 154 of first sleeve 20A and the distal end 164 of the second sleeve 20B are positioned on opposite ends of the envelope 20 formed by sleeve 20A and sleeve 20B. The length of envelope 20, measured along the longitudinal axis 22 from proximal end 154 to the distal end 164, ranges between about 4.0 inches to about 28.0 inches, or between about 12.0 inches and about 24.0 inches, most preferably 20.0 inches.

[0114] Referring again to FIG. 3I, the tongue 155 of the first sleeve 20A is tucked inside the lumen 185B of the second sleeve 20B. The tongue 155 is sized and shaped so that it fits within the lumen 185B of the second sleeve 20B. When the tongue 155 is tucked inside lumen 185B,

the sling 10 enclosed within envelope 20 is shielded by the tongue 155 in the region 255 of the envelope 20 corresponding to the tongue 155. For example, in embodiments where the envelope 20 is employed to implant a mid-urethral sling 10, the tongue 155 of the envelope 20 prevents damage to the sling 10 caused by, for example, patient tissue rubbing against the sling 10 in the region of the envelope 20 corresponding to the tongue 155 during sling 10 placement. Also, the tongue 155 prevents abrasion to patient tissue caused by the sling 10 during envelope 20 placement.

[0115] Referring to FIGS. 3A and 3D, in another embodiment, two sleeves 20A, each having a tongue 155, are provided. The two sleeves 20A are positioned so that their tongues 155 face one another and are positioned on the same plane. Each sleeve 20A tongue 155 is configured to fit inside the lumen 185A of sleeve 20A that it faces. According to this embodiment, the two sleeve 20A tongues 155 combine to provide the desired coverage and protection of the sling 10 enclosed within the envelope 20. In one illustrative mbodiment, referring, still to FIGS. 3A and 3D, two sleeves 20A having a perpendicular axis 24A measuring about 1 inch may be identically cut to provide a tongue 155 width that measures about 0.5 inch, as measured from angle 178 along the perpendicular axis 24A. The two sleeves 20A are positioned so that their tongues 155 face one another and are positioned on the same plane. Each of the two sleeves 20A tongue 155 is inserted into the lumen 185A of the sleeve 20A that it faces and the two tongues 155 protect a sling 10 enclosed by the two sleeves 20A when they form an envelope 20.

[0116] As shown in FIGS. 3A and 3G-3I, and as described above, sleeves 20A and 20B are joined to form envelope 20. The first lumen 185A and the second lumen 185B form the single lumen 185 of the envelope 20. The joined bottom sections 150B and 160B of sleeves 20A and 20B act as hinge sections to form hinge 200 of envelope 20. Various methods may be employed to join bottom sections 150B and 160B, for example, heat bonding, adhesives, or staples. In one embodiment, a clip (not shown) may be employed to join bottom sections 150B and 160B, forming hinge 200. The length of hinge 200 may range between about 2.0 inches to about 14.0 inches in length. The hinge 200 may be trimmed to a shorter length that may be grasped by the operator during the method of delivering the implant assembly, described below. One or both of sleeves 20A and 20B of envelope 20 may be made from a composite of two or more materials.

[0117] In another aspect, the invention is a method for delivering an implant assembly 120 to a patient's body. Referring to FIGS. 3H-3I, the sling 10 is placed within the envelope 20 as is

described above with reference to FIGS. 1J and 1K. At least a portion of the sling 10 is enclosed within the envelope 20 and in one embodiment, the envelope 20 encloses substantially all of the sling 10. With reference to FIG. 3A, in another aspect the invention is a method for positioning an implant, for example, a sling 10 at an anatomical site in the body of a patient. According to one embodiment of this method of the invention, the operator positions the envelope 20 enclosing sling 10, at the anatomical site, for example, the urethra 999 or bladderneck.

[0118] With reference to FIGS. 3A and 3I, the operator grasps hinge 200 and cuts hinge 200 near position 200A. Position 200A is the area of the hinge 200 adjacent implant sling 10, where bottom sections 150B and 160B of sleeves 20A and 20B are not sealed. In one embodiment, the operator cuts one bottom section, 150B or 160B, at position 200A to free it from the other bottom section 150B or 160B. In another embodiment, the operator cuts hinge 200 at position 200A and thereafter withdraws hinge 200 via the vagina. In one embodiment, the joined bottom sections 150B and 160B of hinge 200 are pulled apart. In another embodiment, the operator unfastens and withdraws a clip (not shown) surrounding the bottom sections 150B and 160B, which act as hinge sections, that form hinge 200.

[0119] The operator next grasps tab 208 and pulls tab 208 and the attached sleeve 20A in the direction indicated by arrow 289, withdrawing the tab 208 and attached sleeve 20A. Thereafter, the operator grasps tab 218 and pulls tab 218 and the attached sleeve 20B in the direction indicated by arrow 389, withdrawing the tab 218 and attached sleeve 20B. The sling 10 previously enclosed by the envelope 20 is thereby exposed and the sling 10 remains inside the body of the patient at the anatomical site where the sling 10 was positioned by the operator, for example, at the anatomical site of the urethra 999.

[0120] FIG. 4 illustrates the envelope 20 having the tongue 155, as described above with reference to FIGS. 3A-3I, further including the first guide tube 350A and the second guide tube 350B, as described above with reference to FIGS. 2A-2C. The guide tubes 350A and 350B may provide the operator a mechanical advantage and simplify grasping and withdrawing the sleeves 20A and 20B during the surgical procedure to position the sling 10 at an anatomical site in the body of a patient, for example, at the urethra 999.

[0121] In another aspect, the invention includes an assembly 120 for delivering an envelope 20 and an implant sling 10 to an anatomical site in the body of a patient. In one embodiment, shown in FIG. 5A the assembly 120 includes the envelope 20 including two or more sleeves

20A, 20B, one or more guide tubes 350A, 350B, and a scaffold 305. Referring also to FIG. 5I, the scaffold 305 joins sleeve 20A and 20B to form envelope 20. In one embodiment, the scaffold 305 has a fold 310 that is positioned, for example, between sleeves 20A and 20B. In one embodiment the fold 310 positioned between sleeves 20A and 20B forms a hinge 200. The scaffold 305 simplifies placement and/or withdrawal of the envelope 20 from inside the body of the patient and maintains the integrity of the envelope 20.

[0122] Referring now to FIGS. 5A-5G, the scaffold 305 generally is a flat piece of material that is dimensioned to fit within the lumens 185A and 185B of the sleeves 20A and 20B to join the sleeves 20A and 20B that form the envelope 20. The scaffold 305 may be fabricated from one or more materials such as, for example, polypropylene, polyethylene, polyester, polytetrafluoroethylene, TYVEK®, MYLAR®, and co-polymers thereof as well as one or more dissolvable materials or one or more absorbent materials such as, for example, a sponge-like material such as polyglycolic acid, polylactic acid and other suitable absorbable materials. The scaffold 305 may be firm or rigid, but preferably, it is flexible. Referring to FIG. 5C, the scaffold thickness may range from about 1 mil to about 6 mil, preferably about 3.5 mils. Referring to FIG. 5B, the scaffold 305 longitudinal axis 32 is measured from the scaffold 305 first side 305A to the scaffold second side 305B. The longitudinal axis 32 ranges between about 4 inches and about 60 inches, preferably being about 23 inches. The scaffold perpendicular axis 34 ranges between about 0.2 inches to about 2 inches, preferably between about 0.4 inches to about 0.8 inches, preferably being about 0.6 inches.

[0123] FIGS. 5A and 5D illustrate the scaffold 305 having a fold 310. The fold 310 may be employed to position an implant enclosed by envelope 20. The fold 310 may aid in withdrawal of the scaffold 305 or withdrawal of the envelope 20 after assembly 120 placement (described below). In one embodiment, a portion of the scaffold 305 longitudinal axis 32 is pinched to form a fold 310. Adhesives, staples, heat bonding or other bonding means known to the skilled person may be employed to maintain the fold 310 in the scaffold 305. The fold 310, as measured perpendicular to the longitudinal axis 32 of scaffold 305, ranges from about 0.5 inches to about 6 inches, preferably 2 inches long. In another embodiment, two or more pieces of material may be bonded together by adhesives, staples, heat bonding or other bonding means known to the skilled person to make scaffold 305 and the two pieces of material may form a bond joint to provide the fold 310.

[0124] Referring to FIG. 5A, the scaffold 305 thickness and the material used to manufacture the scaffold 305 may be selected to provide the envelope 20 with integrity appropriate for the surgical procedure, e.g., to withstand the forces imposed on the envelope 20 when placing the sling 10 in the patients body. In another embodiment, the scaffold 305 material may be selected because it forms a strong bond with the sleeve 20A, 20B or the guide tube 350A, 350B. The scaffold 305 material may be the same or different than the material used to manufacture the sleeves 20A, 20B. The scaffold 305 may be bonded inside the lumens 185A and 185B of the sleeves 20A and 20B by adhesives, suturing, heat bonding or any other means known to the skilled person. In one embodiment, the scaffold 305 is bonded to a portion of the sleeve 20A inside the lumen 185A.

[0125] Referring to FIG. 5A, in one embodiment according to the invention, the assembly 120 includes an envelope 20 including a first sleeve 20A, a second sleeve 20B, the scaffold 305 and a sling 10. Guide tubes 350A and 350B are disposed on the proximal end 154 and the distal end 164 of the envelope 20. Referring now to FIG. 5E, the sleeve 20A may have a tongue 155 prepared in the same manner as was described with respect to the FIGS. 3B-3D. Referring still to FIG. 5E, the bottom section 150B, described in relation to FIG. 3D, is removed by trimming the bottom section 150B along the perpendicular axis 24A of sleeve 20A. In one embodiment, the bottom section 150B of sleeve 20A is trimmed along the perpendicular axis 24A from about the angle 176 vertex to about the angle 178 vertex.

[0126] Referring to FIG. 5F, the second sleeve 20B of the envelope 20 shown in FIG. 5A is illustrated. The second sleeve 20B has an inner surface 30, an outer surface 40, a proximal end 160, and a distal end 164. The second sleeve 20B is a tube-like structure including a second lumen 185B. The length of the second sleeve 20B between the proximal end 160 and the distal end 164, along the longitudinal axis 22B, measures between about 2.0 inches and about 14.0 inches, preferably being about 10.0 inches. The perpendicular axis 24B of second sleeve 20B measures between about 0.2 inches to about 2.0 inches, preferably between about 0.4 inches and about 0.8 inches, preferably about 0.6 inches.

[0127] As illustrated in FIGS. 5G and 5I, the first side 305A of scaffold 305 is inserted into lumen 185A and the second side 305B of scaffold 305 is inserted into lumen 185B. The scaffold 305 may be bonded to a portion or along the entire length of the lumens 185A and 185B of sleeves 20A and 20B, respectively, by employing adhesive, staples, heat bonding or other means

known to the skilled person. In another embodiment, the scaffold 305 is simply positioned inside the lumens 185A and 185B of the sleeves 20A and 20B without being bonded to the sleeves 20A or 20B of envelope 20. One or both of sleeves 20A and 20B may be made from a composite of two or more materials.

[0128] In one embodiment, referring now to FIGS. 5E and 5F, sleeve 20A, measured from the proximal end 154 to the end of the tongue 155 along the longitudinal axis 22A measures about 10.75 inches, with the length of tongue 155 measuring about 1 inch, and the longitudinal axis 22B of sleeve 20B measures about 9.75 inches. Referring again to FIG. 5I, in one embodiment, the scaffold 305 joins sleeves 20A and 20B to form envelope 20 and the sling 10 is positioned inside the lumen 185 of envelope 20. When the sleeve 20A tongue 155 is tucked inside the lumen 185B of sleeve 20B, the envelope 20 measures about 19.5 inches. In an embodiment where sling 10 measuring about 14 inches long is enclosed by envelope 20, about 5.5 inches of space of lumen 185 is free from the sling 10. The proximal end 154 and the distal end 164 of envelope 20 may each extend up to about 2 inches beyond the sling 10.

[0129] Referring now to FIGS. 5F and 5I, the scaffold 305 may be used to join two sleeves 20B and 20B that do not have a tongue 155. In such embodiments, a portion of the sling 10 enclosed by the envelope 20 may be exposed.

[0130] One or both of sleeves 20A and 20B of envelope 20 may be made from a composite of two or more materials. The scaffold 305 may or may not have a fold 310. Referring now to FIG. 5A, the scaffold 305 may be used to join sleeves 20A and 20B with or without guide tubes 350A and 350B. For example, in some embodiments, the scaffold 305 joins sleeves 20A and 20B having tabs (not shown).

[0131] In another illustrative embodiment according to the invention, referring again to FIG. 5A, the sling 10 is placed within the lumen 185 of envelope 20 after sleeves 20A and 20B are joined when scaffold 305 is positioned between the sleeves 20A and 20B, but prior to guide tubes 350A and 350B being joined to the envelope 20. A first guide tube 350A and a second guide tube 350B are described above with reference to FIGS. 2A-2C. Tabs 208 and 218 described with reference to FIGS. 1A and 3A may alternatively be joined to the envelope 20 proximal end 154 and distal end 164, respectively. The implant, for example a sling 10, may be inserted into the lumen 185 of envelope 20 manually and/or with the aid of a grasping device or with the aid of a placement fork 170 described above with reference to FIG. 1J. The envelope 20 may enclose at

least a portion of the sling 10. In one embodiment, referring to FIG. 5I, the envelope 20 includes a tongue 155, which may be employed to overlay or protect the sling 10 enclosed within envelope 20.

[0132] Referring to FIGS. 1J and 5I, in one embodiment, the sling 10 inside lumen 185 lies between scaffold 305 and the top surfaces, 250A and 260A of the sleeves 20A and 20B of envelope 20. In another illustrative embodiment, at least the first end 305A of scaffold 305 is placed inside of the first lumen 185A of sleeve 20A and the sling 10 is placed within the first lumen 185A of the first sleeve 20A manually and/or with the aid of a grasping device or with the aid of a placement fork 170. Thereafter, sleeve 20B is joined with sleeve 20A by inserting at least the second end 305B of scaffold 305 inside the lumen 185B of sleeve 20B to form envelope 20. In one embodiment the first end 305A and the second end 305B of scaffold 305 are bonded inside the lumens 185A and 185B of the sleeves 20A and 20B, respectively. The remaining portion of sling 10 may be placed within the second lumen 185B of sleeve 20B. Optionally, the remaining portion of sling 10 may be placed within the second lumen 185B of sleeve 20B prior to or after forming a fold 310 within scaffold 305.

[0133] The operator may employ the assembly 120 of the invention illustrated in FIG. 5A to position the sling 10 at an anatomical site in the body of a patient. The operator will employ the first and second guide tubes 350A and 350B to position the envelope 20 enclosing sling 10 at an anatomical site in the body of a patient with the aid of a delivery device. Suitable delivery devices may be used to position the envelope 20 of the assembly 120 enclosing at least a portion of an implant according to a plurality of surgical approaches, for example, according to transvaginal, transabdominal (e.g., percutaneous), supra-pubic, pre-pubic, or transobturator approachs. The operator positions the envelope 20 enclosing sling 10 at the anatomical site, for example, the urethra 999 or bladderneck.

[0134] With continued reference to FIG. 5A, the operator grasps the scaffold 305 that is between the sleeves 20A and 20B and then cuts the scaffold 305. In one illustrative embodiment, the operator cuts and withdraws the fold 310 within the scaffold 305. Next, the operator grasps the first guide tube 350A and pulls guide tube 350A, the attached sleeve 20A, and a portion of scaffold 305 in the direction indicated by arrow 289, withdrawing the guide tube 350A, attached sleeve 20A and a portion of scaffold 305 from the patient's body. Thereafter, the operator grasps the second guide tube 350B and pulls guide tube 350B, the attached sleeve 20B and a portion of

scaffold 305 in the direction indicated by arrow 389, withdrawing the guide tube 350B, the attached sleeve 20B and a portion of scaffold 305 from the patient's body. In one embodiment, the guide tubes 350A and 350B provide the operator with a mechanical advantage simplifying grasping the sleeves 20A and 20B during the surgical procedure. The sling 10 previously enclosed by the envelope 20 is thereby exposed and remains inside the body of the patient at the anatomical site where the sling 10 was positioned by the operator, for example, at the anatomical site of the urethra 999.

[0135] Referring still to FIG. 5A, in another illustrative embodiment, the operator cuts envelope 20 at position 437A and withdraws the first guide tube 350A and a portion of envelope 20. The operator cuts envelope 20 at position 437B and withdraws the second guide tube 350B and a portion of the envelope 20. According to this embodiment, the scaffold 305 may be bonded to the lumens 185A and 185B of envelope 20. The operator cuts the scaffold 305 and grasps and withdraws the first envelope 20A and a portion of scaffold 305 from the patient. Thereafter, the operator grasps and withdraws the second envelope 20B and a portion of scaffold 305 from the patient. The sling 10 previously enclosed by the envelope 20 is thereby exposed and remains inside the body of the patient at the anatomical site where the sling 10 was positioned by the operator, for example, at the anatomical site of the urethra 999.

[0136] In another embodiment, referring still to FIG. 5A, the guide tube 350A, the proximal end 154 of sleeve 20A and the scaffold 305 first end 305A are bonded together. Similarly, the guide tube 350B, the distal end 164 of sleeve 20B and the scaffold 305 second end 305B are bonded together. The operator cuts and withdraws guide tubes 350A and 350B at positions 437A and 437B on envelope 20. Thereafter, the operator grasps scaffold 305 between the sleeves 20A and 20B and intravaginally withdraws the scaffold 305 from the envelope 20. Optionally, the scaffold 305 fold 310 is grasped. Finally, the operator grasps and withdraws the first sleeve 20A and thereafter grasps and withdraws the second sleeve 20B. The sling 10 previously enclosed by the envelope 20 is thereby exposed and the sling 10 remains inside the body of the patient at the anatomical site where the sling 10 was positioned by the operator, for example, at the anatomical site of the urethra 999. Alternatively, after cutting the envelope 20 at positions 437A and 437B and withdrawing guide tubes 350A and 350B, the operator first grasps and withdraws the first sleeve 20A, then grasps and withdraws the second sleeve 20B, and finally grasps and withdraws the scaffold 305. In one embodiment, when the sleeves 20A and 20B are withdrawn from the

patient prior to the scaffold 305, the scaffold 305 acts as a slide that enables the sleeves 20A and 20B to disengage from the envelope 20.

[0137] Referring to FIGS. 6-7, the implant assembly 120, and more specifically, the envelope 20 of the assembly 120 has a proximal end 154 and a distal end 164 and the envelope 20 encloses at least a portion of the implant, for example a sling 10 for treatment of female urinary incontinence. The implant sling 10 may be made from a mesh. Referring now to FIG. 6, in one embodiment, the envelope 20 includes a single sleeve 20C.

[0138] In one illustrative embodiment, the sling 10 includes a de-tanged mid-length portion 244, which has end points 249A and 249B, and two tanged end-length portions 248A and 248B. Suitable implant slings 10 include the de-tanged slings such as the slings described in, for example, U.S.S.N. 10/092,872 filed March 7, 2002, the entirety of which is incorporated by reference herein. The two tanged end-length portions 248A and 248B extend from the end points 249A, 249B of the de-tanged mid-length portion 244 to sling ends 252A and 252B, respectively. The two tanged end-length portions 248A and 248B are, in a preferred embodiment, of substantially equal length, such that the de-tanged mid-length portion 244 is substantially centered along the long axis of the sling 10.

[0139] The envelope 20 includes a first sleeve surface 256 extending along the long axis of the envelope 20 and a second sleeve surface 258 disposed on the opposite side of the envelope 20 from the first sleeve surface 256. In one embodiment, the first sleeve surface 256 has at least one discontinuity 264. Referring to FIG. 6, for example, in one embodiment, the discontinuity 264 in the first sleeve surface 256 is, for example, a gap 268, indicated by double-ended arrows 269. The gap 268 is defined by a first sleeve end point 276A and a second sleeve end point 276B. Referring now to FIG. 7, in an alternative embodiment, the envelope 20 includes two discontinuities 264 in the first sleeve surface 256, for example, slit-shaped apertures 272A, 272B. In still other embodiments, the first sleeve surface 256, or the second sleeve surface 258, may include any number of discontinuities 264.

[0140] Referring to the embodiment illustrated in FIG. 6, a first region 273A in the first sleeve surface 256 extends from the proximal end 154 to the end point 276A and a second region 273B in the first sleeve surface 256 extends from the distal end 164 to the end point 276B. The separation of the first region 273A from the second region 273B by the gap 268 allows the envelope 20 to be removed when the physician cuts the second sleeve surface 258. The gap also aids in removal of the envelope 20 by preventing friction between the first region 273A and the

second region 273B that might otherwise occur if the regions 273A and 273B overlapped. Friction between the regions 273A and 273B would make the process of removing the envelope 20 from about the sling 10 more difficult. The gap 268 eliminates the possibility that the first region 273A and the second region 273B may stick to one another.

[0141] The gap 268 in the first sleeve surface 256 may be made in a variety of ways. As an example, the envelope 20 is flattened and a rectangular window, having width substantially equal to the width of the first sleeve surface 256, is cut out of a mid-length section of the first sleeve surface 256.

[0142] Referring still to the embodiment illustrated in FIG. 6, the de-tanged mid-length portion 244 of the sling 10 is preferably in alignment with, and therefore exposed at, the gap 268. In other words, end points 249A, 249B of the de-tanged mid-length portion 244 preferably coincide with the first sleeve end point 276A and the second sleeve end point 276B, respectively.

[0143] Referring to the embodiment illustrated in FIG. 7, the sling 10 is shown to be at least partially enclosed by the envelope 20. The sling 10 exits the envelope 20 at one slit-shaped aperture 272A and 272B, and re-enters the envelope 20 at the other slit-shaped aperture 272B and 272A. Preferably, the end points 249A and 249B of the de-tanged mid-length portion 244 coincide with the slit-shaped apertures 272A and 272B of the first sleeve surface 256, such that the de-tanged mid-length portion 244 of the sling 10 is located outside the envelope 20, between the slit-shaped apertures 272A and 272B, and the two tanged end-length portions 248A and 248B are enclosed within the envelope 20.

[0144] Variations, modifications, and other implementations of what is described herein will occur to those of ordinary skill in the art without departing from the spirit and the scope of the invention. Accordingly, the invention is not to be defined only by the preceding illustrative description of certain embodiments.

What is claimed is:

Claims

1. An assembly for delivering an implant to an anatomical site in the body of a patient, the assembly comprising:

an envelope, said envelope comprising at least a first sleeve and a second sleeve, said sleeves configured to enclose at least a portion of said implant, one of said first sleeve and said second sleeve comprising a tongue that overlaps said implant.

2. The assembly of claim 1 wherein at least one of said first and second sleeves comprises a composite of two or more materials.

3. The assembly of claim 1 wherein each of said first and second sleeves is substantially the same length.

4. The assembly of claim 1 wherein each of said first and second sleeves further comprises at least one hinge section.

5. The assembly of claim 4 wherein the hinge section of the first sleeve couples to the hinge section of the second sleeve to form a hinge.

6. The assembly of claim 1 wherein the implant comprises a sling for treating female urinary incontinence.

7. The assembly of claim 1 wherein the envelope encloses substantially all of the implant.

8. A method for delivering an implant to an anatomical site in the body of a patient, the method comprising the steps of:

providing an assembly comprising an envelope, said envelope comprising at least a first sleeve and a second sleeve, said sleeves configured to enclose at least a portion of said implant, one of said first sleeve and said second sleeve comprises a tongue, wherein said tongue overlaps said implant;

positioning said implant at said anatomical site; and

withdrawing said envelope from the patients body.

9. The method of claim 8 wherein each sleeve further comprises a hinge section, the hinge section of one sleeve coupled to the hinge section of the other sleeve.

10. The method of claim 9 further comprising the steps of:

cutting said hinge sections, separating said first sleeve from said second sleeve and withdrawing said sleeves from the patient's body.

11. An assembly for delivering an implant to an anatomical site in the body of a patient, the assembly comprising:

an envelope, said envelope comprising at least a first sleeve and a second sleeve, said sleeves configured to enclose at least a portion of said implant; and

a scaffold configured to couple said first sleeve and said second sleeve.

12. The assembly of claim 11 wherein said scaffold further comprises a fold to form a hinge between the first and second sleeves.

13. The assembly of claim 11 wherein one of said first sleeve and said second sleeve further comprise a tongue overlapping said implant.

14. The assembly of claim 11 wherein at least one of said first and second sleeves comprises a composite of two or more materials.

15. A method for delivering an implant to an anatomical site in the body of a patient, the method comprising the steps of:

providing an assembly comprising an envelope, said envelope comprising at least a first sleeve and a second sleeve, said sleeves configured to enclose at least a portion of said implant;

providing a scaffold, said scaffold coupling said first sleeve and said second sleeve;

positioning said implant at said anatomical site; and

withdrawing said envelope from the patients body.

16. The method of claim 15 wherein said scaffold further comprises a fold to form a hinge between the first and second sleeves.

17. The method of claim 15 further comprising the steps of:

cutting said scaffold and separating said first sleeve and said second sleeve; and

withdrawing said scaffold and said sleeves from the patient's body.

18. An assembly for delivering an implant to an anatomical site in the body of a patient, the assembly comprising:

an envelope comprising a first sleeve section and a second sleeve section interoperating to enclose at least a portion of said implant;

a tab on an end of said first sleeve section and passed through said first sleeve section to a first end of said envelope; and

a tab access located at said first end of said envelope for accessing said tab.

19. The assembly of claim 18 further comprising a tab on an end of said second sleeve section and passed through said second sleeve section to a second end of said envelope; and

a tab access located at said second end of said envelope for accessing said tab.

20. The assembly of claim 18 wherein said envelope further comprises an external tab located at the end of the first sleeve section for positioning said envelope inside the body of a patient.

21. The assembly of claim 18 wherein said envelope comprises a visual indication mark disposed on a surface of said envelope for aiding in positioning said envelope.

22. The assembly of claim 18 wherein each of said first and second sleeve sections are separate sleeves.

23. The assembly of claim 22 wherein each of said first and second sleeve sections is the same length.

24. The assembly of claim 22 wherein said at least said first and second sleeve sections overlap to enclose at least a portion of said implant.

25. The assembly of claim 18 wherein each of said first and second sleeve sections comprise at least one hinge section.

26. The assembly of claim 25 wherein said hinge section of the first sleeve section is coupled to said hinge section of the second sleeve section to form a hinge.

27. The assembly of claim 18 wherein said envelope comprises a tearable region.

28. The assembly of claim 27 wherein said tearable region includes a tab on the first sleeve section.

29. The assembly of claim 27 wherein said tearable region comprises a plurality of apertures.

30. The assembly of claim 18 wherein said envelope comprises a plurality of cuts.

31. The assembly of claim 18 wherein said envelope is made from a tearable material.

32. The assembly of claim 18 wherein said envelope is made from a material with a linear molecular orientation.

33. A method for delivering an implant to an anatomical site in the body of a patient, the method comprising the steps of:

providing an assembly comprising an envelope comprising a lumen sized to enclose at least a portion of said implant, an internal tab, said internal tab being joined to said envelope, and a tab access, wherein said internal tab is accessible through said tab access to position said implant in the body of the patient; and

positioning said assembly at said anatomical site in the patient's body.

34. A method for delivering an implant to an anatomical site in the body of a patient, the method comprising the steps of:

providing an assembly comprising an implant and an envelope, said envelope comprising at least two sleeves, said sleeves configured to enclose at least a portion of said implant, wherein each sleeve further comprises a hinge section, said hinge section of one sleeve coupled to said hinge section of the other sleeve;

positioning said implant at said anatomical site in the patient's body.

35. The method of claim 34 further comprising the steps of:

cutting said hinge section and separating said sleeves; and

withdrawing said sleeves from the patient's body.

36. A method for delivering an implant to an anatomical site in the body of a patient, the method comprising the steps of:

positioning an implant at an anatomical location;

pulling a tab in a first sleeve section to tear a portion of an envelope away from the implant; and

intravaginally pulling on a hinge on the implant subsequent to pulling on said tab to withdraw all or a portion of said envelope from the body via the vagina.

37. The method of claim 36 further comprising the steps of:

accessing said tab on the first sleeve section via a tab access on the first sleeve section prior to pulling said tab.

38. An assembly for delivering an implant to an anatomical site in the body of a patient, the assembly comprising:

a sling having a length and a width; and

an envelope enclosing at least a portion of the sling, and having first and second sides, the first side including a discontinuity exposing the width along a first portion of the sling.

39. The assembly of claim 38 wherein the discontinuity includes a gap disposed between first and second portions of the first side of the envelope.

40. The assembly of claim 38 wherein the envelope includes a second discontinuity exposing the width along a second portion of the sling.

41. The assembly of claim 39 wherein the width along a mid-length portion of the sling is devoid of covering by the envelope.

42. The assembly of claim 40 wherein the mid-length portion of the sling is de-tanged.

43. The assembly of claim 38 wherein the first side of the envelope further comprises first and second slit-shaped apertures intermediately located along the length of the sling, the sling

threads out of the envelope through the first slit-shaped aperture and back into the envelope through the second slit-shaped aperture creating a mid-length envelopeless sling loop.

44. The assembly of claim 42 wherein the mid-length envelopeless sling loop is de-tanged.

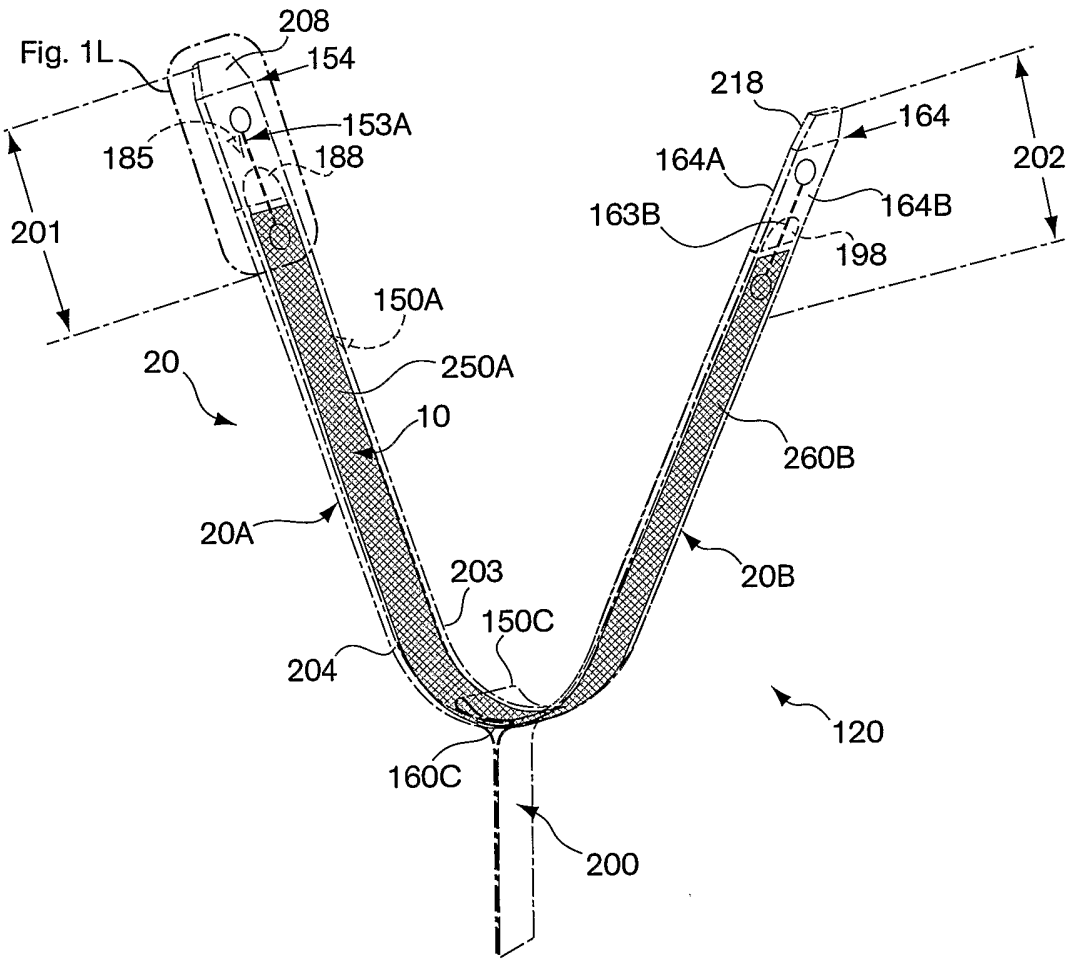
Fig. 1L
208
154
153A
185
188
201
150A
20
250A
10
20A
203
150C
204
160C
200
218
164
164A
164B
163B
198
202
260B
20B
120

Fig. 1A

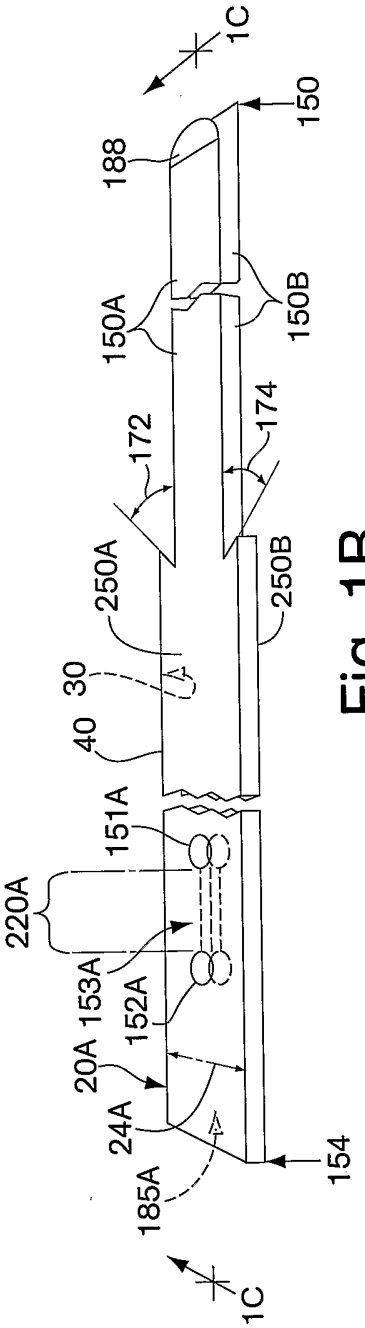
1C
150
188
150A
150B
174
172
250A
250B
30
40
151A
220A
153A
152A
20A
24A
185A
154
1C

Fig. 1B

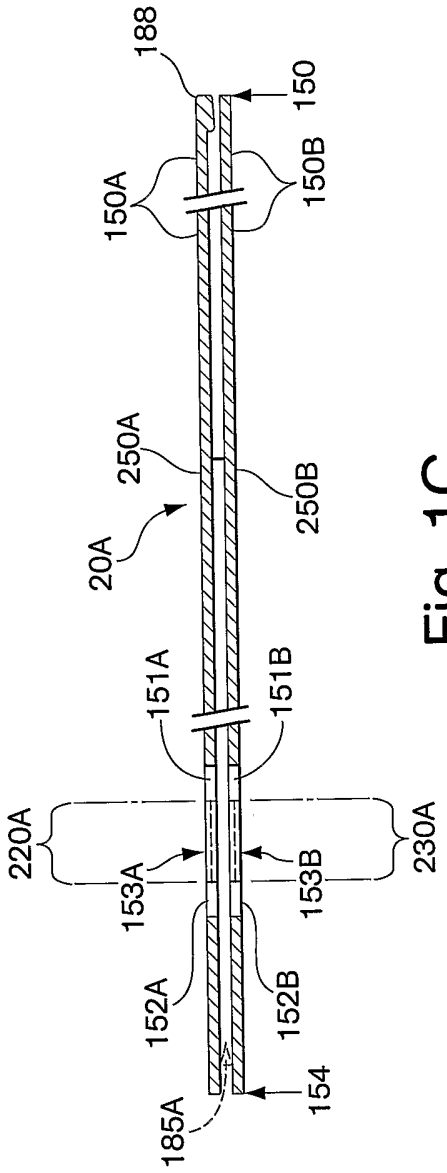
188
150
150A
150B
250A
250B
20A
151A
151B
220A
230A
153A
153B
152A
152B
154
185A

Fig. 1C

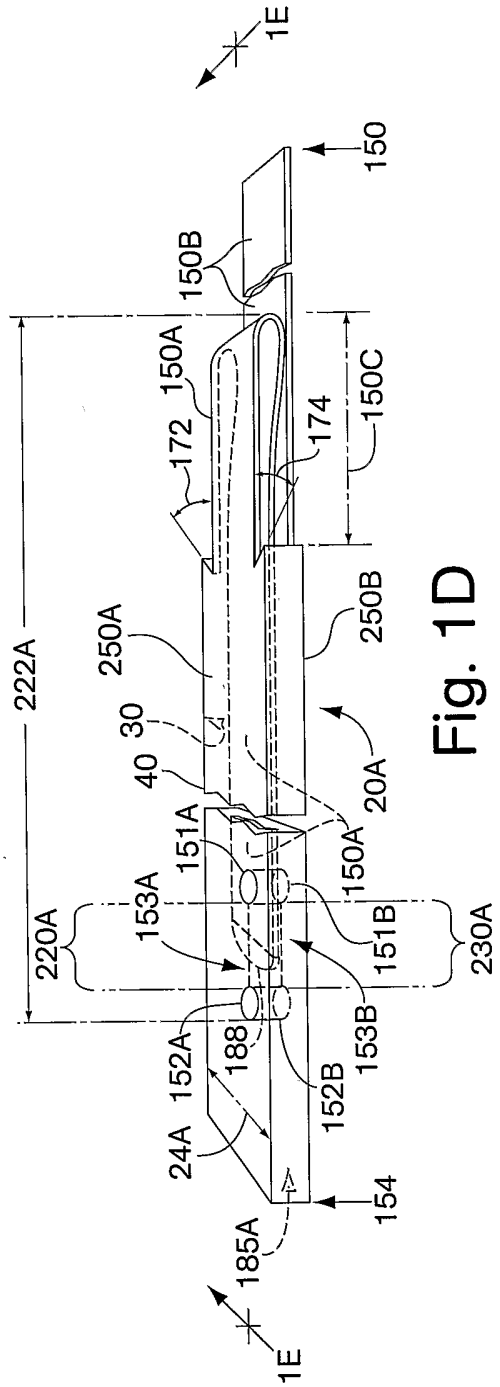
1E
150
150B
150A
172
174
150C
250A
250B
222A
30
40
20A
151A
150A
153A
151B
220A
230A
188
152A
153B
152B
24A
154
185A
1E

Fig. 1D

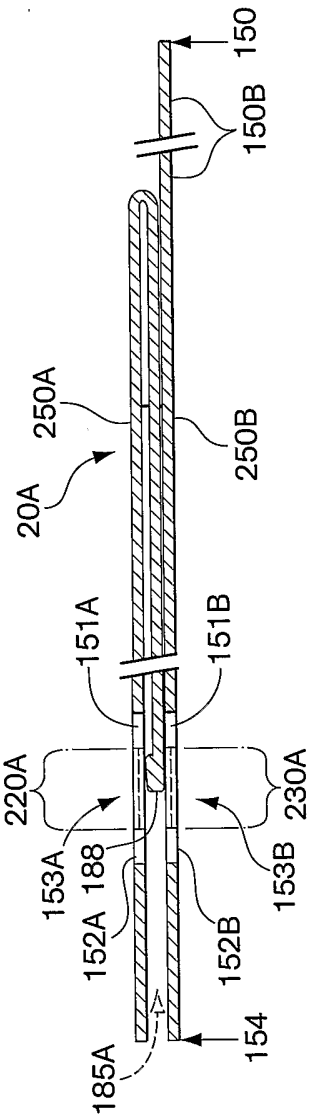
150
150B
250A
250B
20A
151A
151B
220A
230A
153A
188
152A
153B
152B
154
185A

Fig. 1E

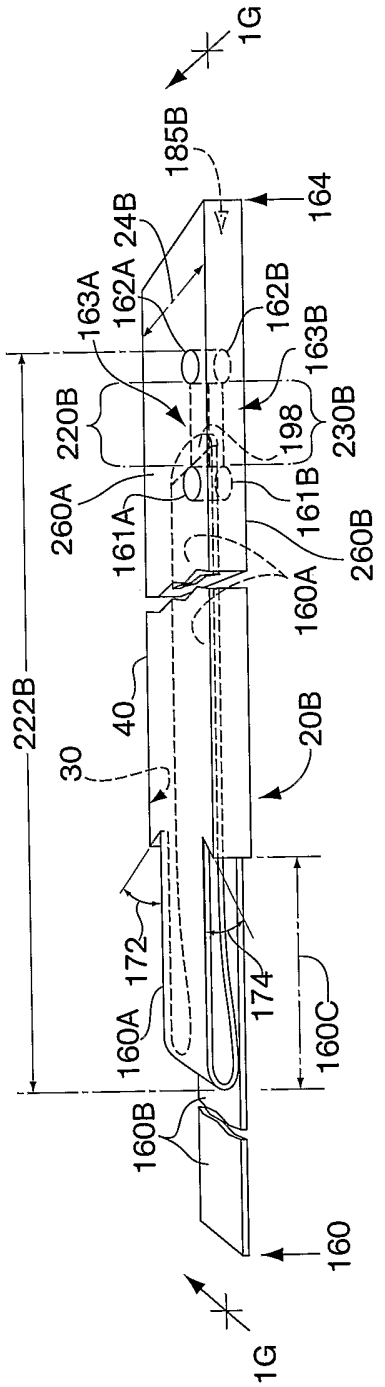
1G
185B
164
24B
162A
163A
162B
163B
220B
198
230B
260A
161A
161B
260B
160A
40
222B
30
20B
172
174
160C
160A
160B
160
1G

Fig. 1F

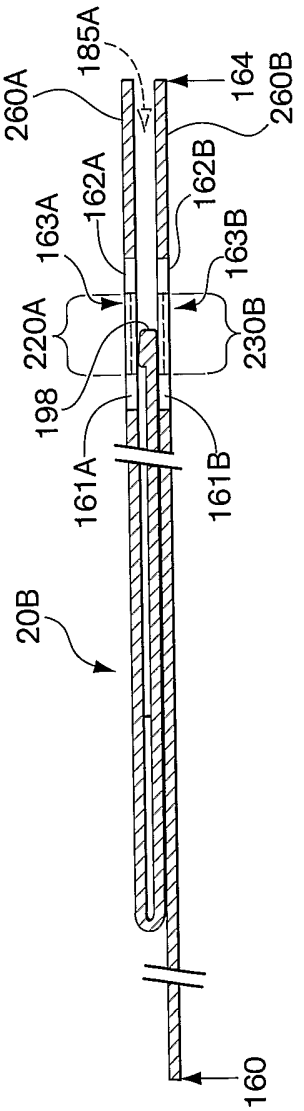
260A
185A
164
260B
162A
163A
162B
163B
220A
198
230B
161A
161B
20B
160

Fig. 1G

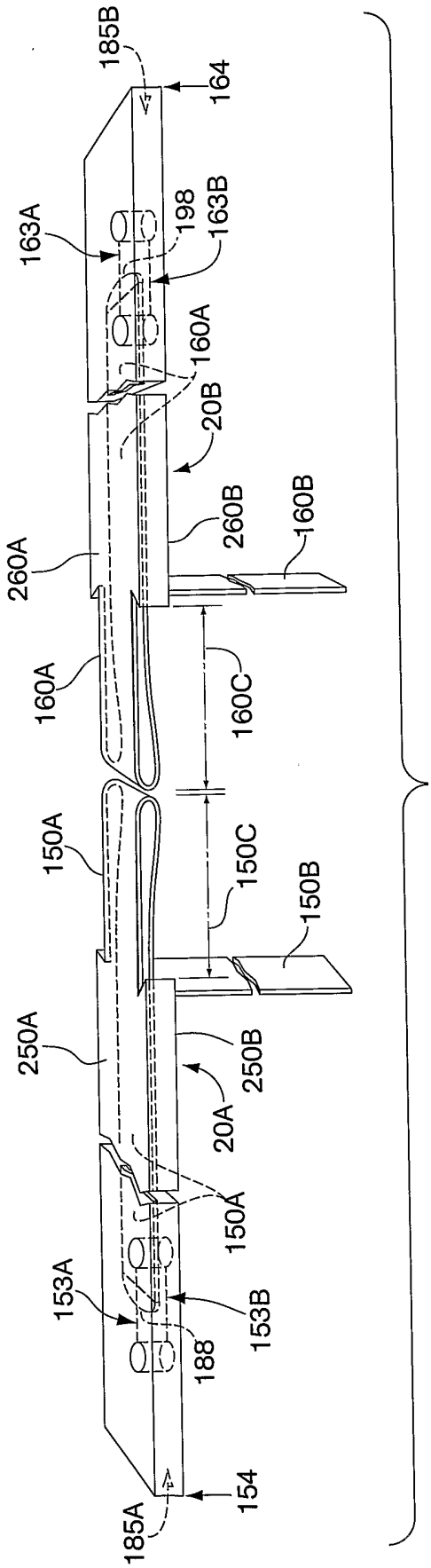
185B
164
163A
198
163B
160A
20B
260B
160B
260A
160A
160C
150A
150C
150B
250A
250B
20A
150A
153A
153B
188
154
185A

Fig. 1H

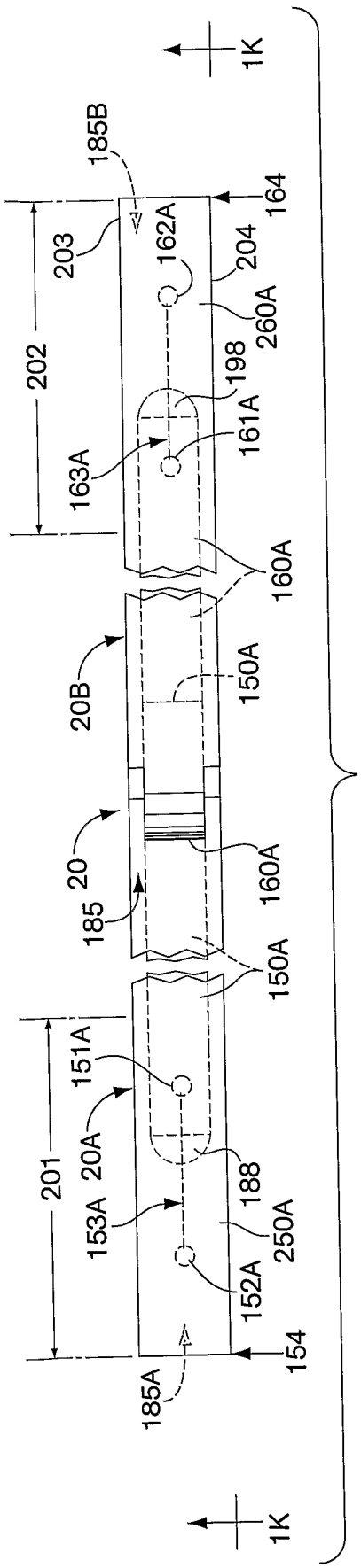

Fig. 1I

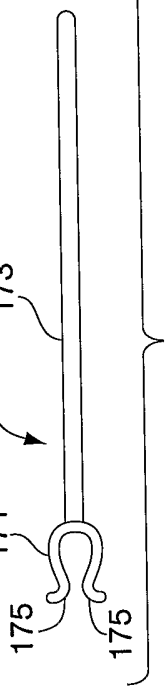

Fig. 1J

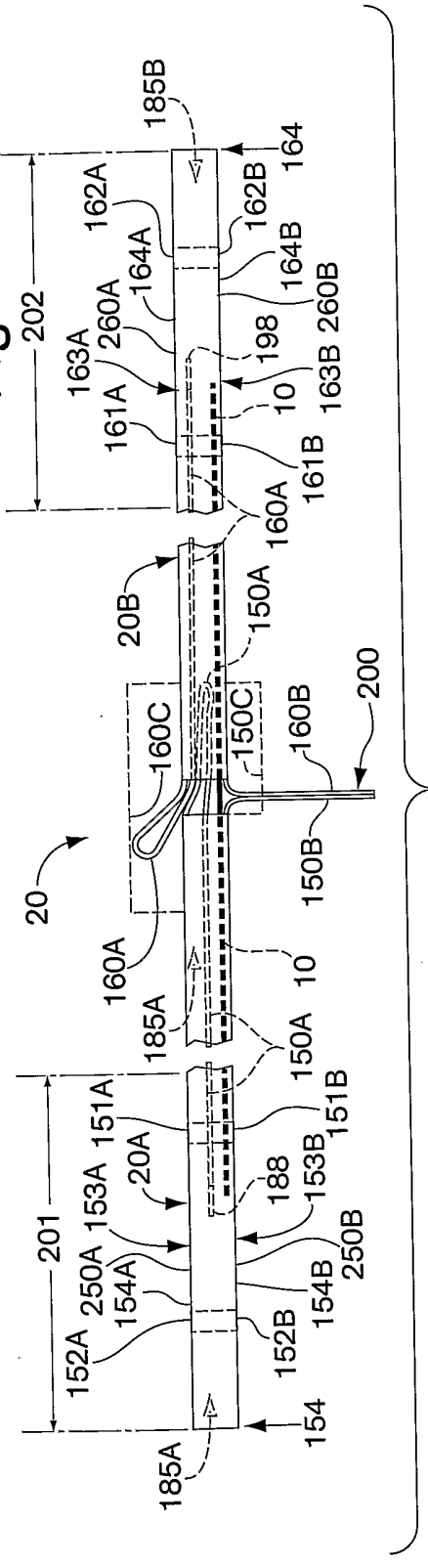

Fig. 1K

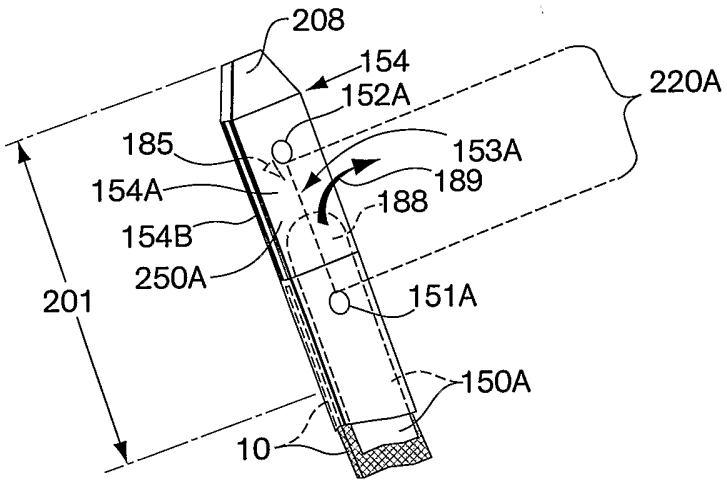
208
154
152A
220A
185
153A
189
154A
188
154B
250A
151A
201
150A
10

Fig. 1L

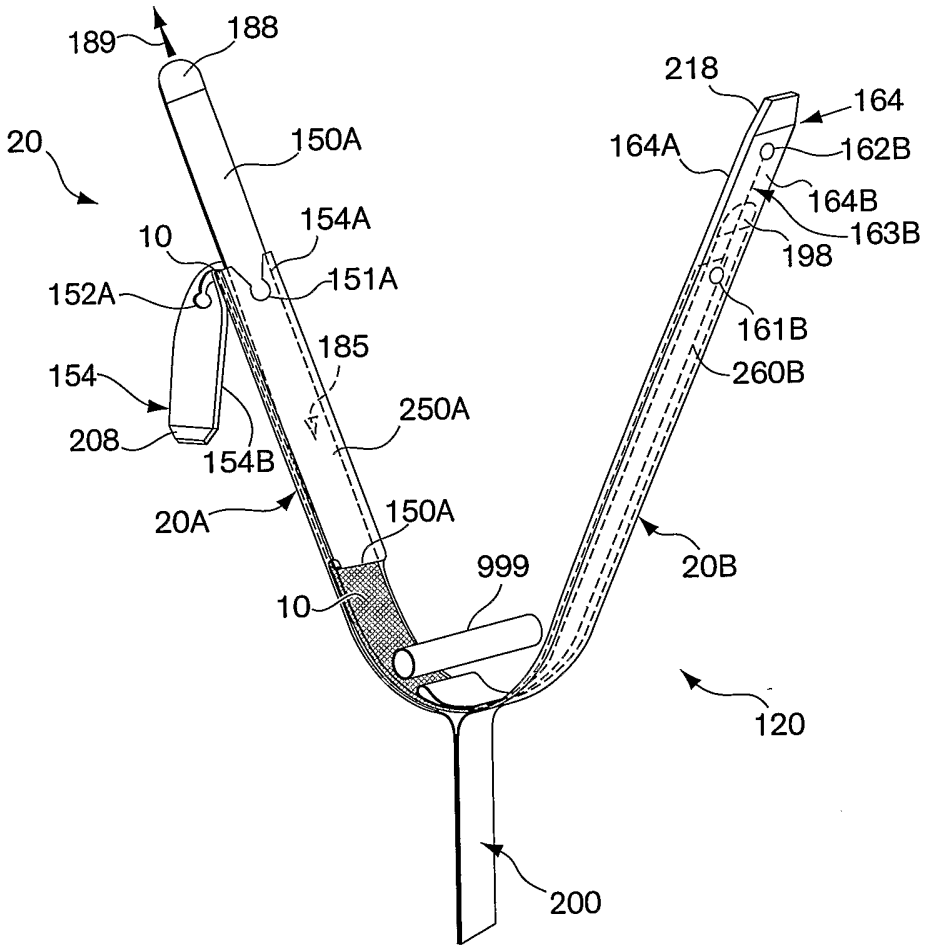
189
188
218
164
20
150A
164A
162B
164B
154A
10
163B
198
152A
151A
161B
185
154
260B
250A
208
154B
20A
150A
999
20B
10
120
200

Fig. 1M

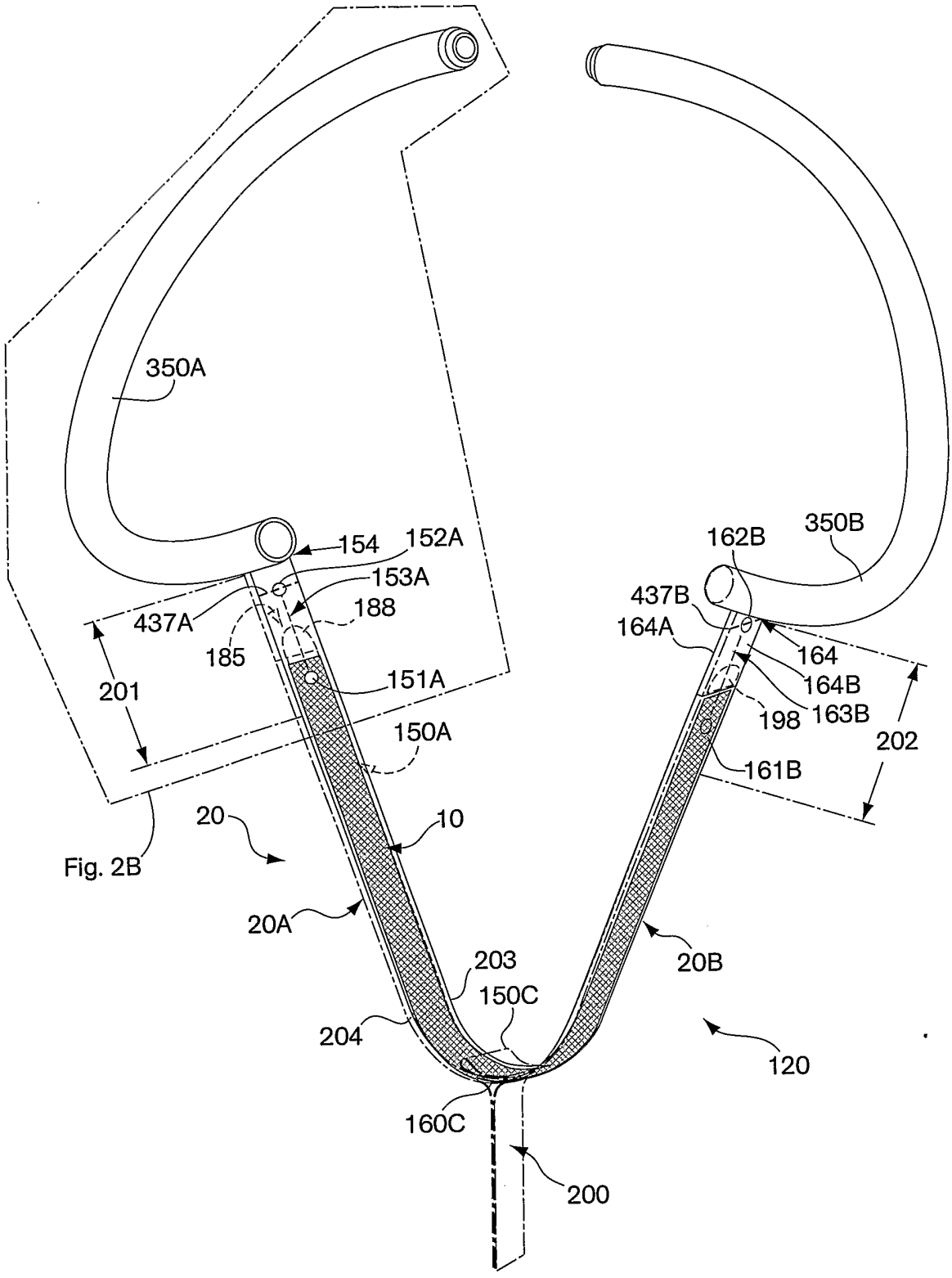
350A
154
152A
153A
188
437A
185
201
151A
150A
20
10
Fig. 2B
20A
203
150C
204
160C
200
350B
162B
437B
164A
164
164B
198
163B
202
161B
20B
120

Fig. 2A

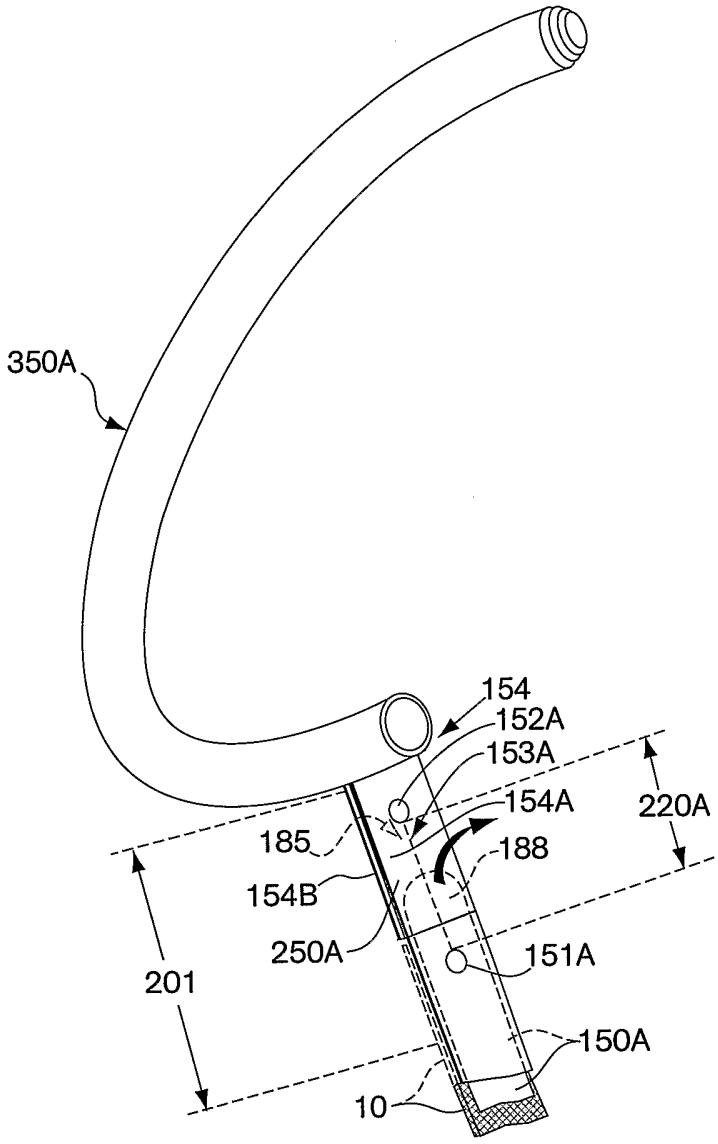
350A
154
152A
153A
154A
220A
185
188
154B
250A
151A
201
150A
10

Fig. 2B

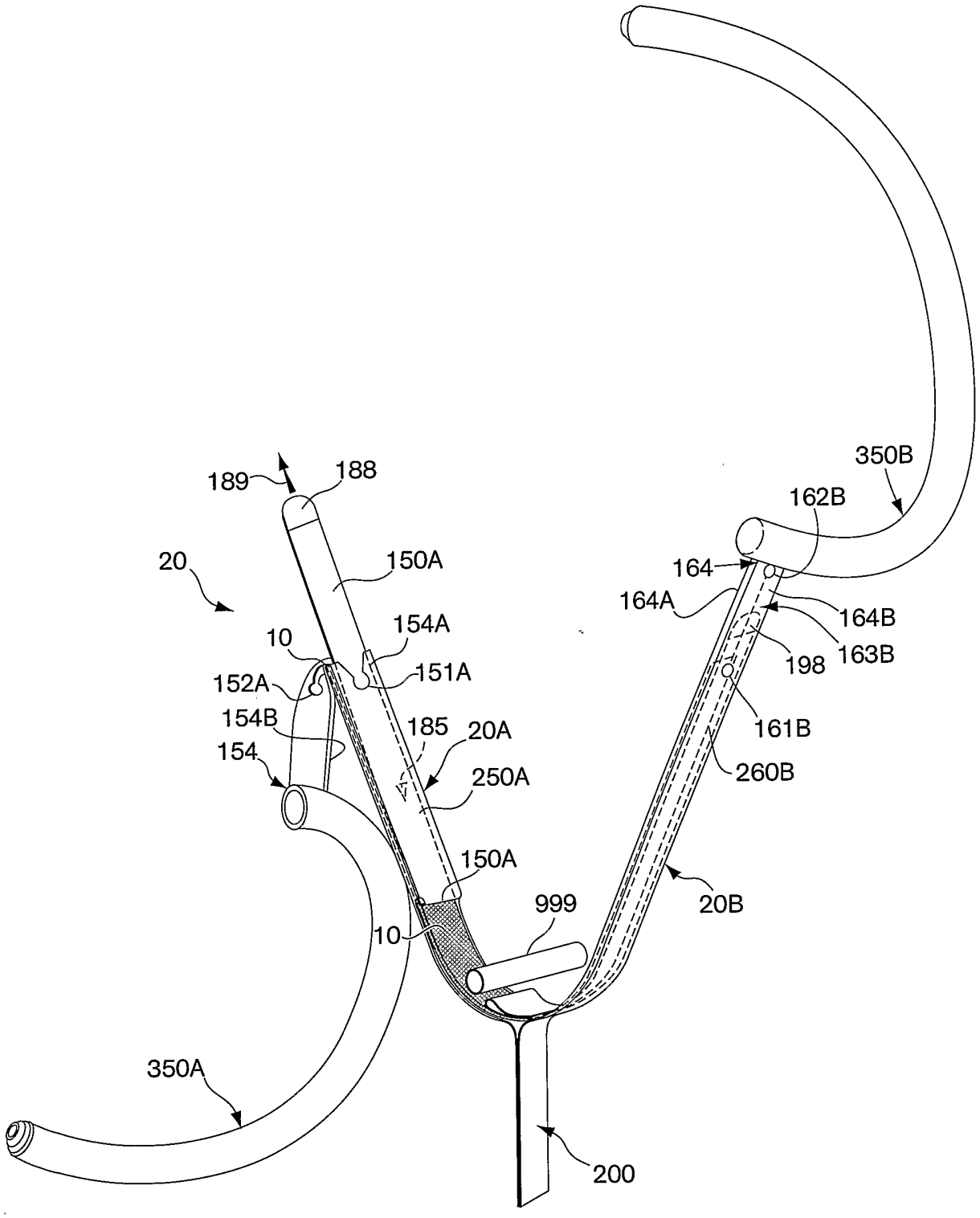
189
188
350B
162B
20
150A
164
164A
154A
164B
10
163B
198
152A
151A
154B
185
20A
161B
154
250A
260B
150A
999
20B
10
350A
200

Fig. 2C

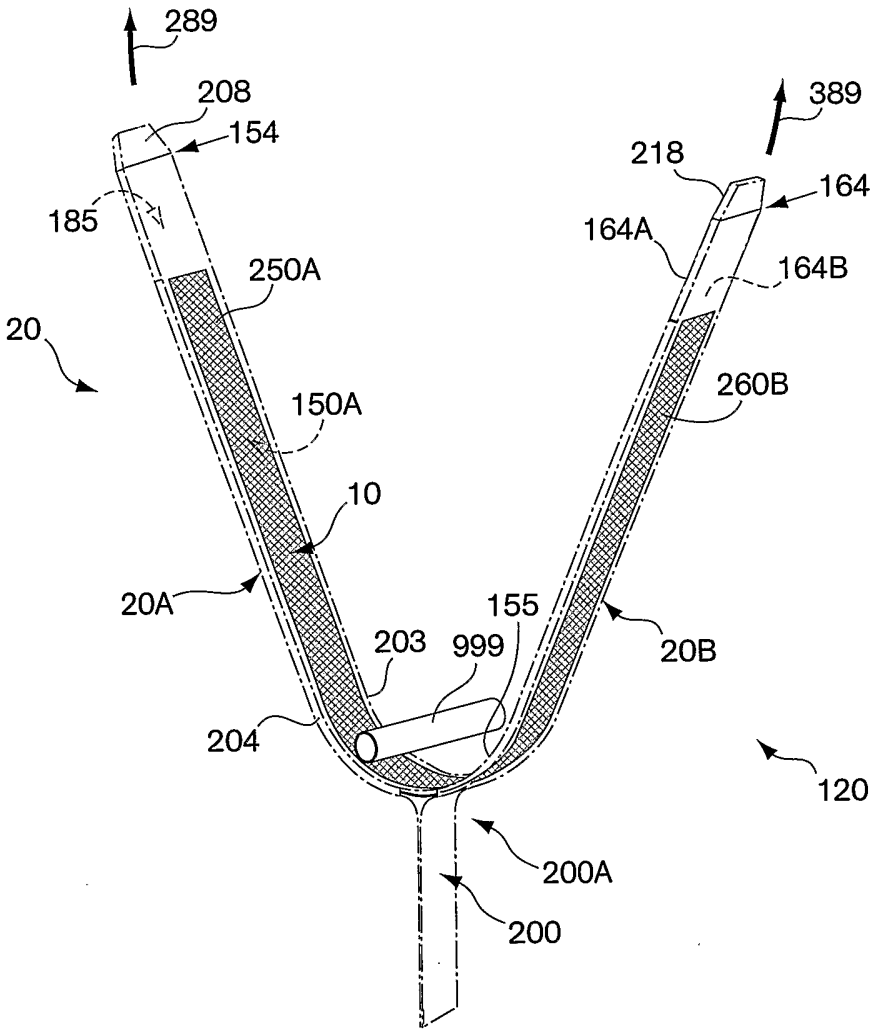
289
208
154
185
250A
20
150A
10
20A
203
999
155
204
389
218
164
164A
164B
260B
20B
120
200A
200

Fig. 3A

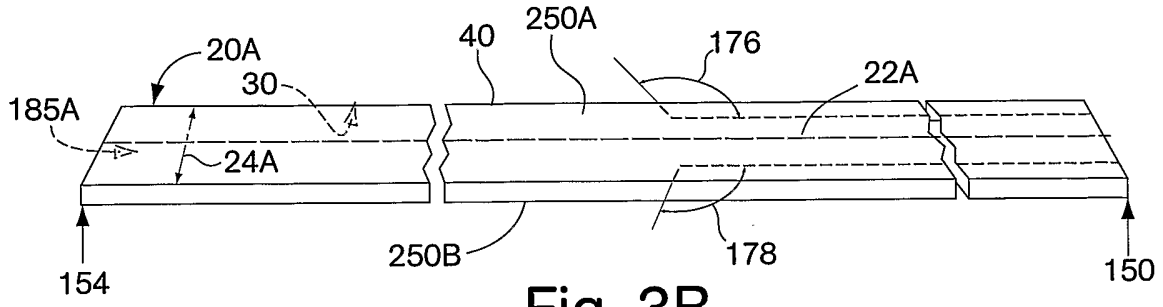

Fig. 3B

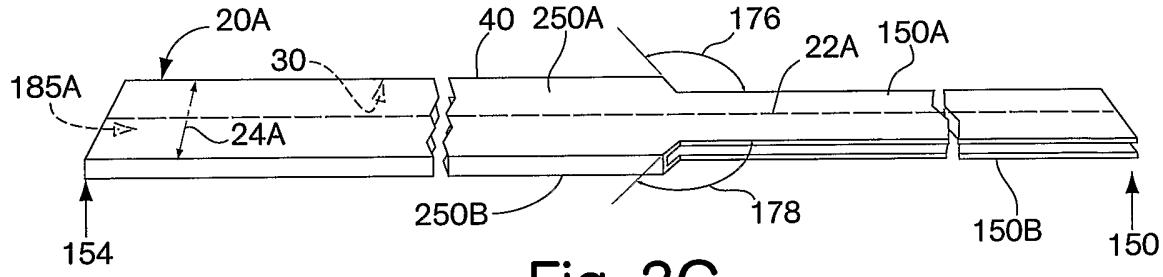

Fig. 3C

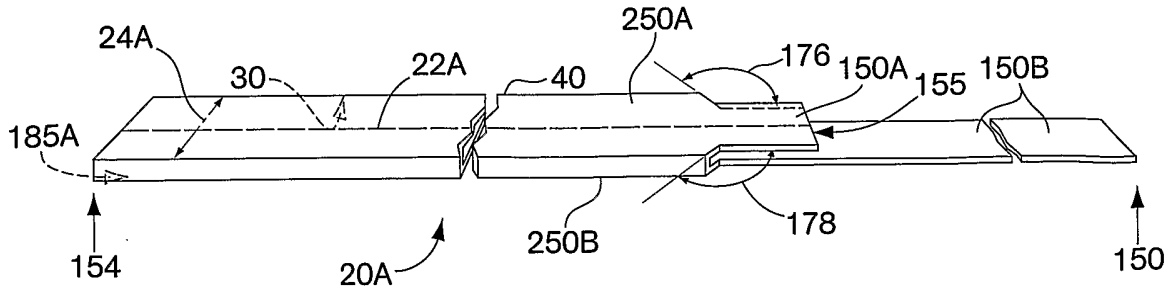

Fig. 3D

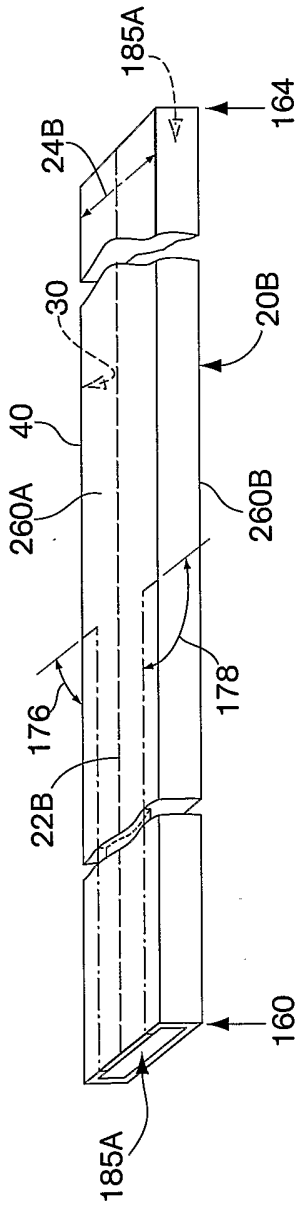

Fig. 3E

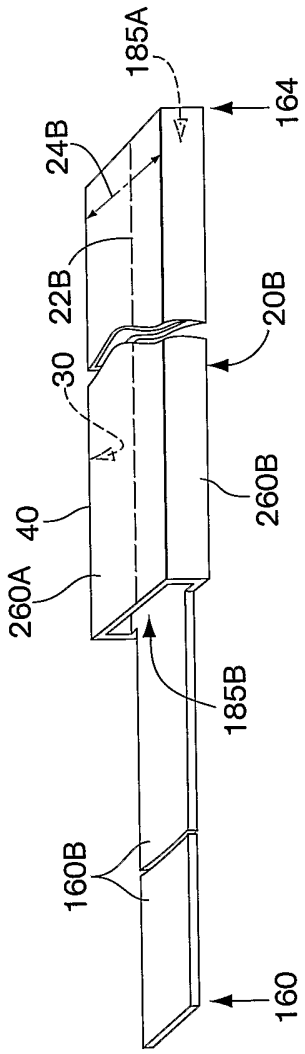

Fig. 3F

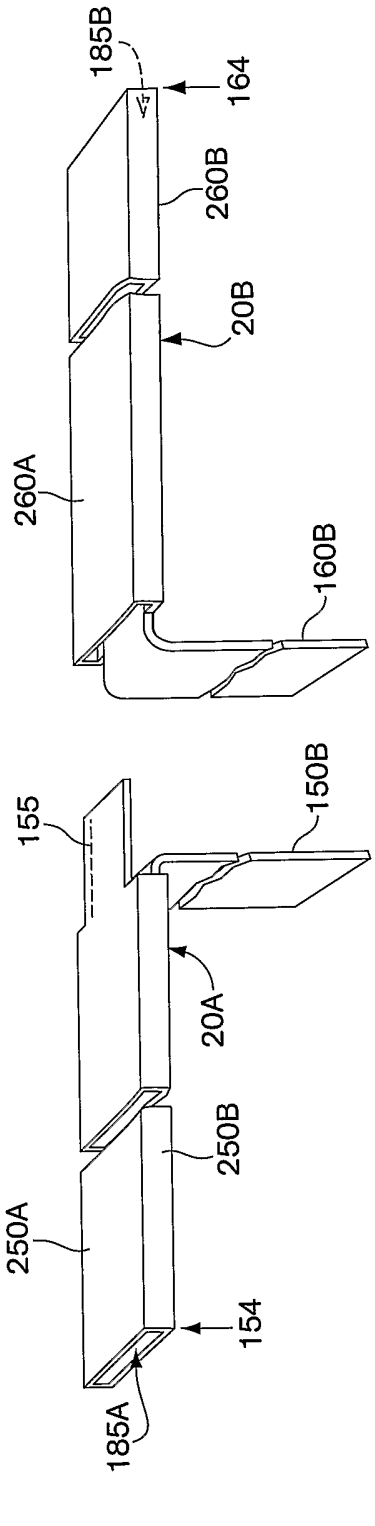

Fig. 3G

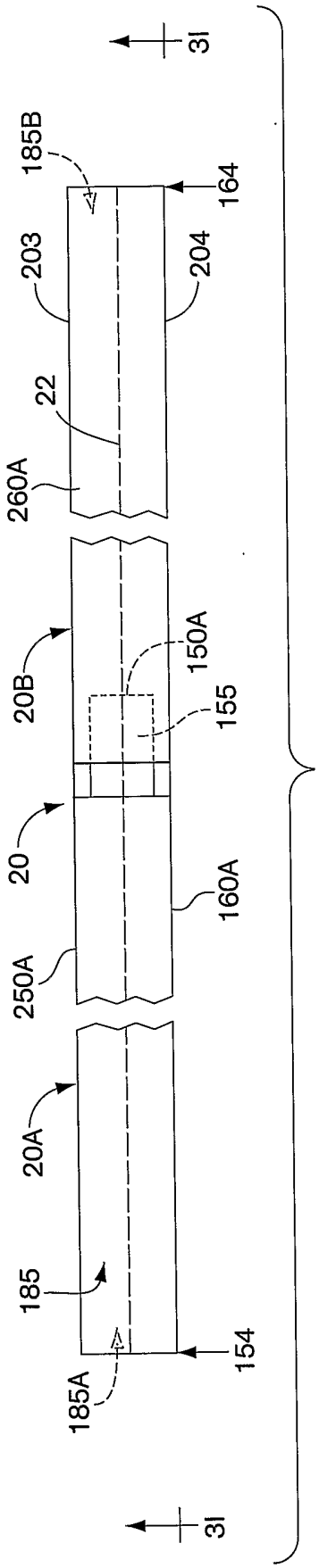
3I
185B
164
203
204
22
260A
20B
150A
155
20
160A
250A
20A
185
154
185A
3I

Fig. 3H

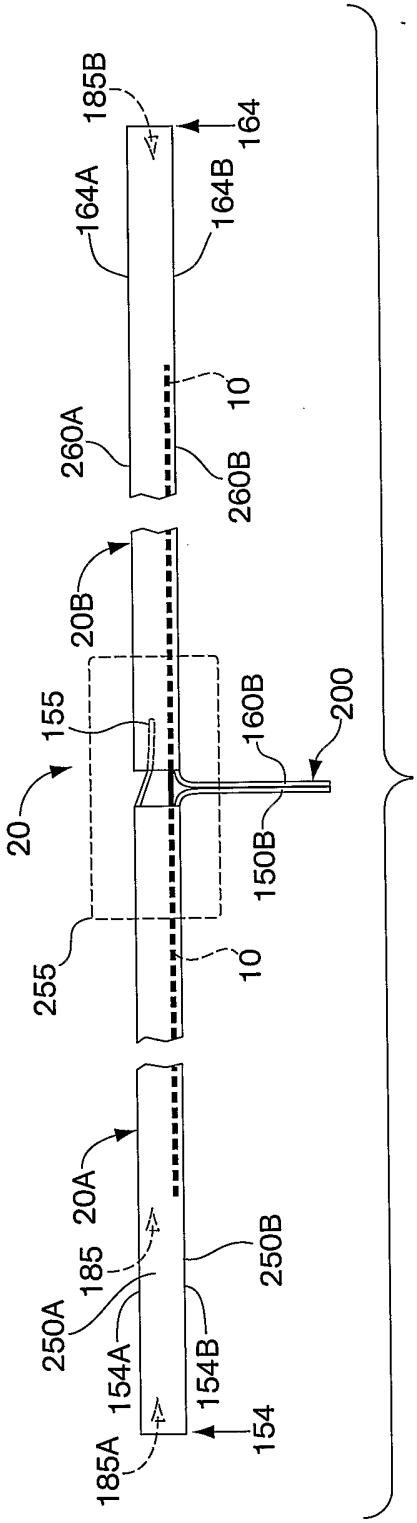
185B
164
164A
164B
260A
10
260B
20B
155
160B
200
20
150B
255
10
20A
185
250B
250A
154A
154B
154
185A

Fig. 3I

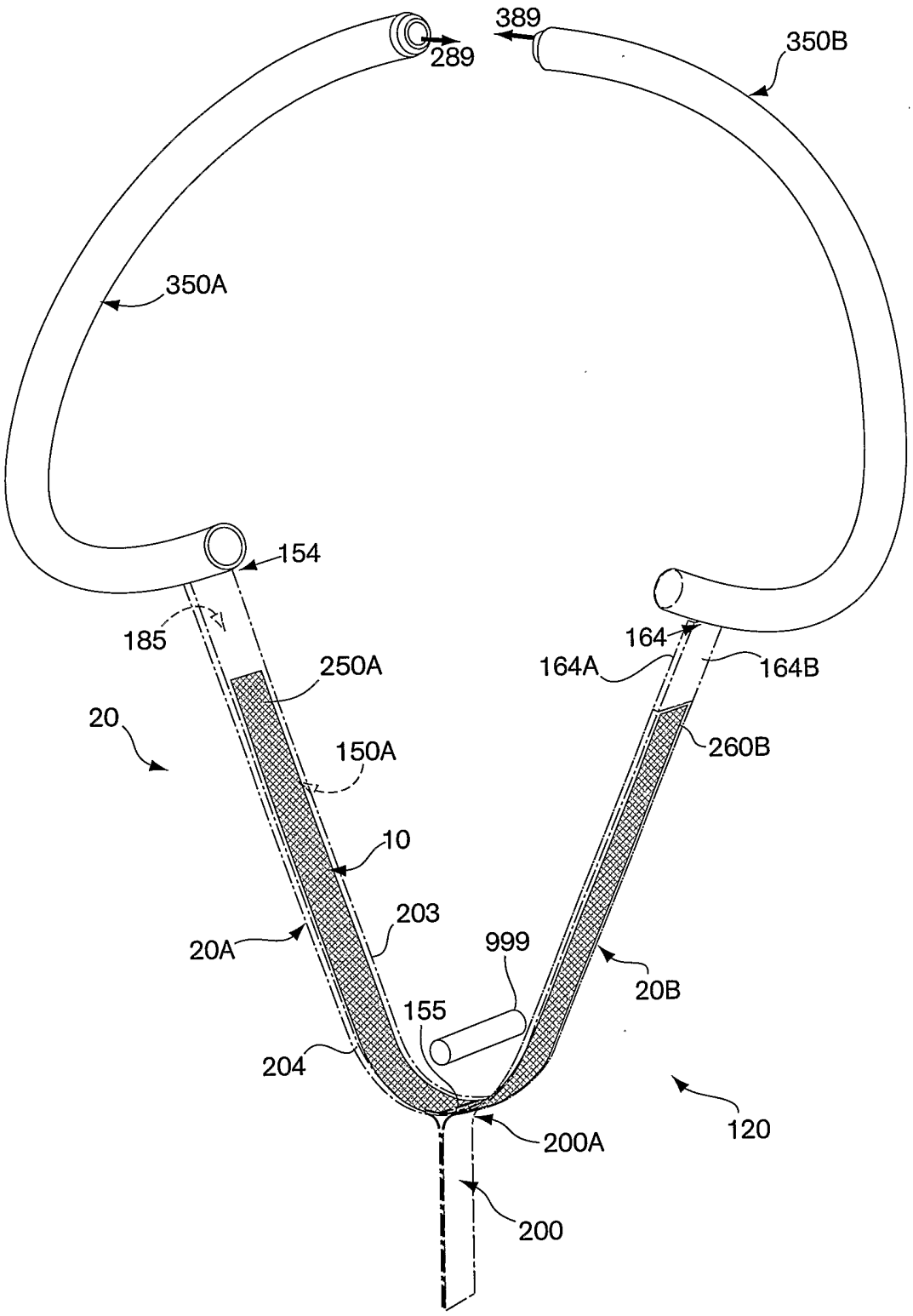
389
289
350B
350A
154
185
164
164A
164B
250A
20
150A
260B
10
203
20A
999
20B
155
204
120
200A
200

Fig. 4

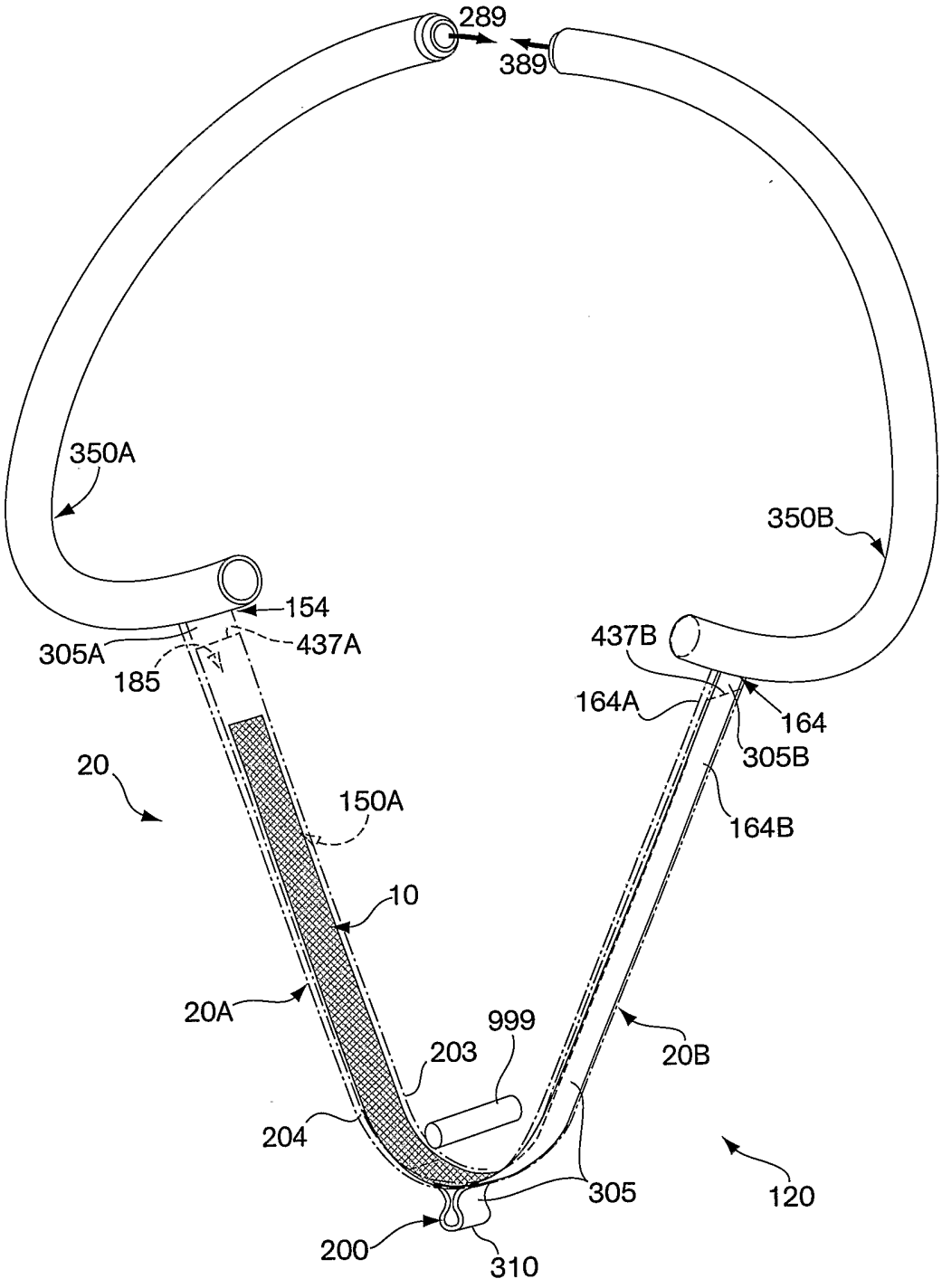
289
389
350A
350B
154
305A
437A
185
437B
164A
164
305B
20
150A
164B
10
20A
999
203
20B
204
305
120
200
310

Fig. 5A

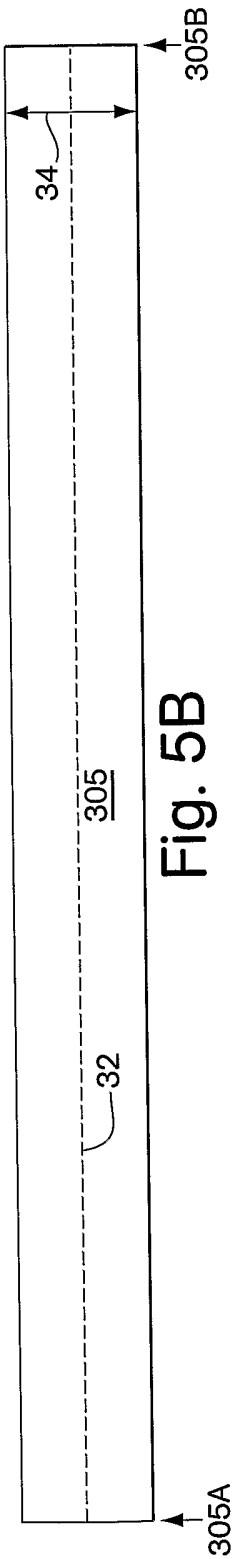

Fig. 5B

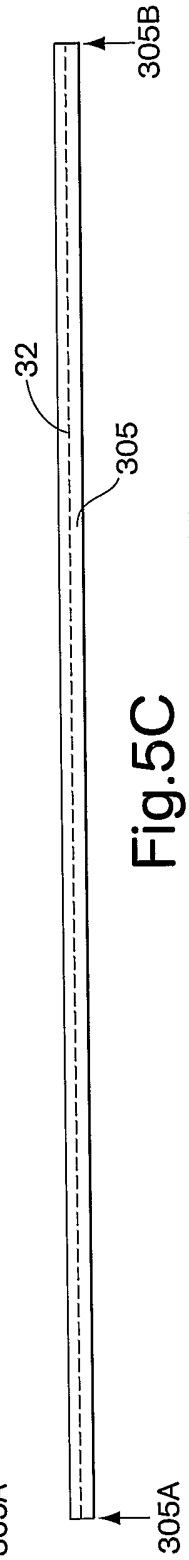

Fig.5C

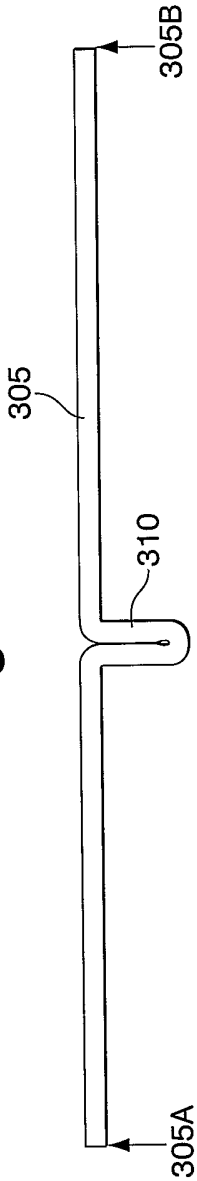

Fig. 5D

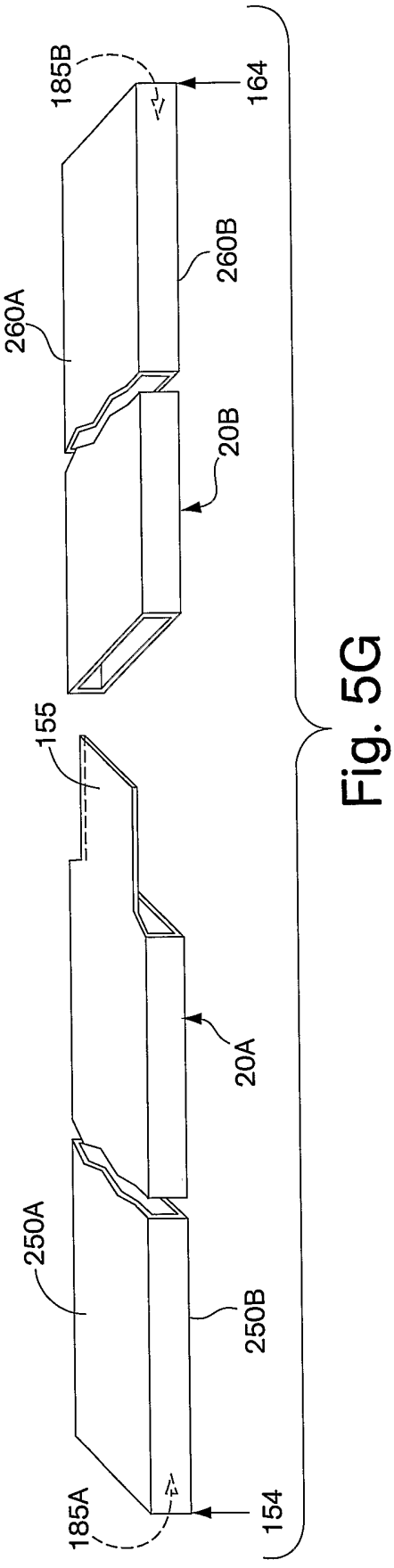

Fig. 5G

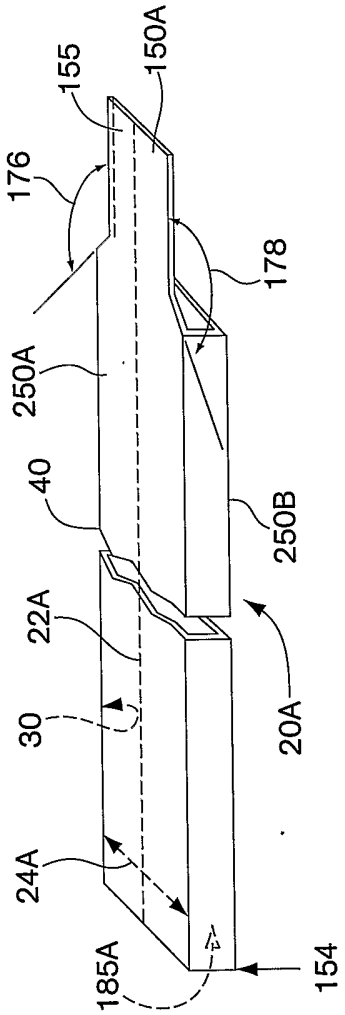

Fig. 5E

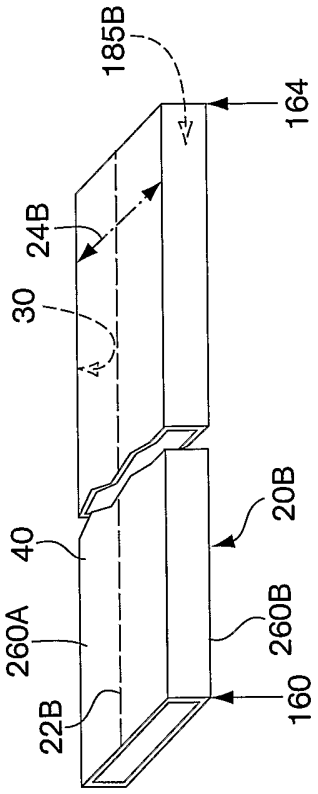

Fig. 5F

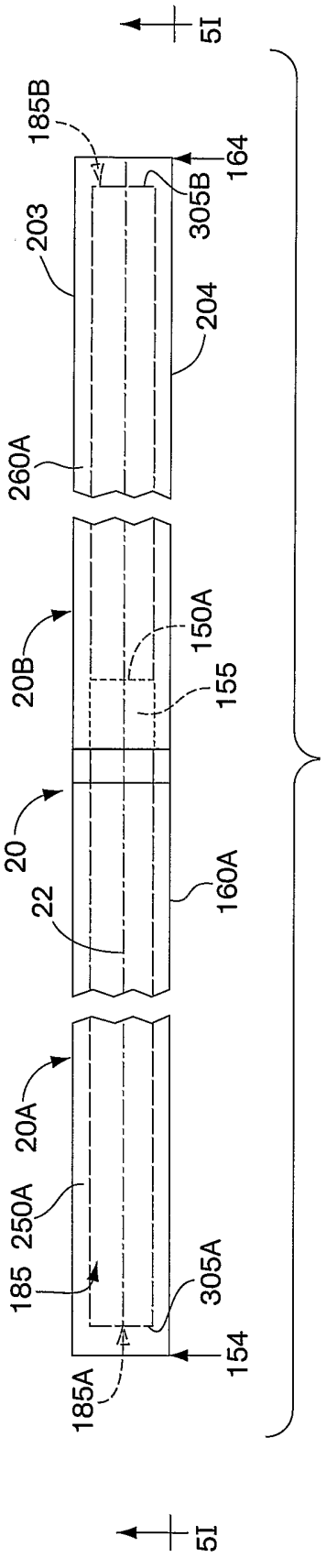
5I
185B
164
305B
203
204
260A
20B
150A
155
20
22
160A
20A
250A
185
305A
154
185A
5I

Fig. 5H

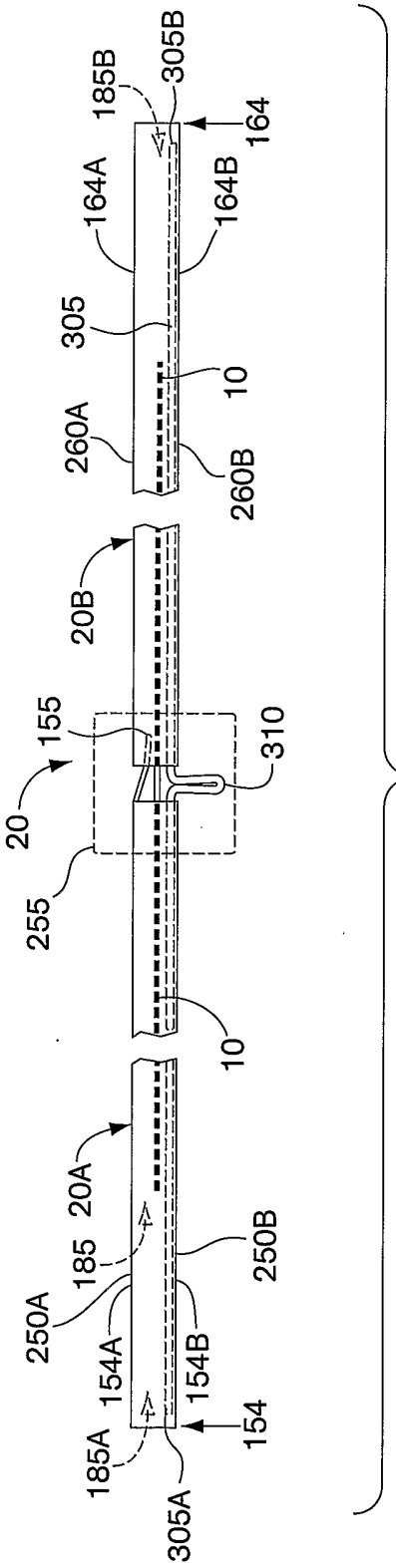
185B
305B
164
164A
164B
305
10
260A
260B
20B
155
310
20
255
10
20A
185
250B
250A
154A
154B
154
185A
305A

Fig. 5I

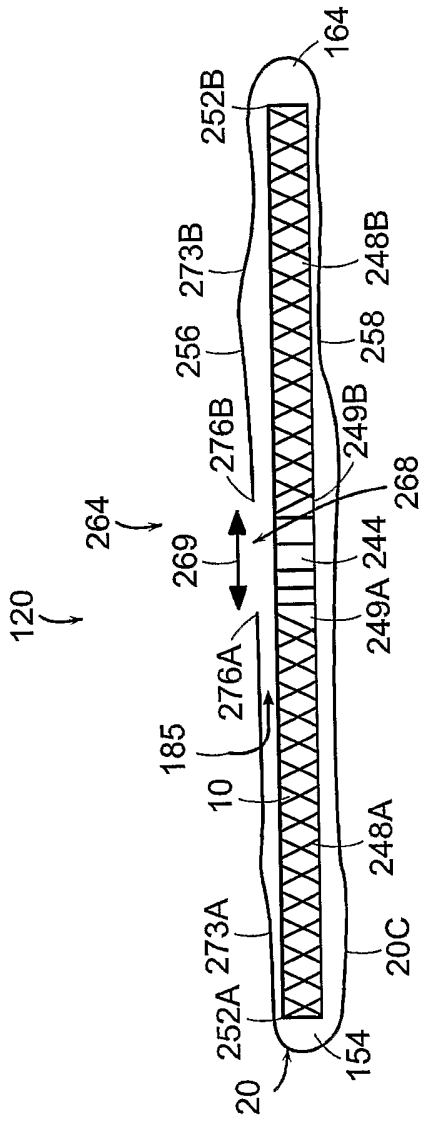
120
264
269
276A
276B
185
10
20
273A
273B
252A
252B
154
164
256
258
248A
248B
249A
249B
244
268
20C

FIG. 6

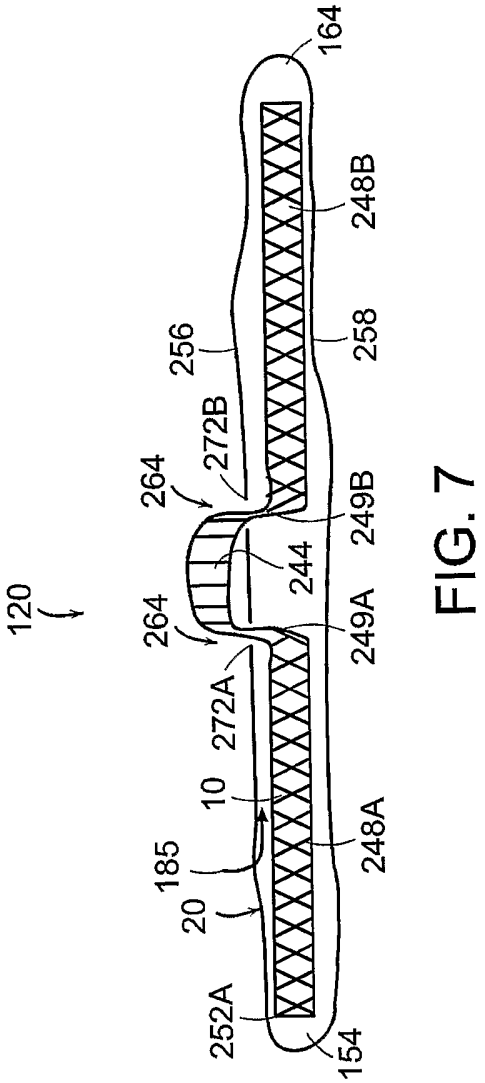
120
264
272A
272B
185
10
20
252A
154
164
256
258
248A
248B
249A
249B
244

FIG. 7