Innovation, Sciences et Développement économique Canada
Office de la Propriété Intellectuelle du Canada

Innovation, Science and Economic Development Canada
Canadian Intellectual Property Office

CA 2856539 C 2020/06/02

(11)(21) 2 856 539

(12) BREVET CANADIEN
CANADIAN PATENT

(13) C

(86) Date de dépôt PCT/PCT Filing Date: 2012/11/28
(87) Date publication PCT/PCT Publication Date: 2013/06/06
(45) Date de délivrance/Issue Date: 2020/06/02
(85) Entrée phase nationale/National Entry: 2014/05/21
(86) N° demande PCT/PCT Application No.: US 2012/066880
(87) N° publication PCT/PCT Publication No.: 2013/082174
(30) Priorité/Priority: 2011/11/28 (US61/564,206)

(51) Cl.Int./Int.Cl. *A61M 25/01* (2006.01), *A61L 2/18* (2006.01), *A61M 25/16* (2006.01), *A61M 39/16* (2006.01)

(72) Inventeur/Inventor:
TENNICAN, PATRICK O., US

(73) Propriétaire/Owner:
HYPROTEK, INC., US

(74) Agent: MARKS & CLERK

(54) Titre : DISPOSITIFS DE CATHETER ET TECHNIQUES
(54) Title: CATHETER DEVICES AND TECHNIQUES

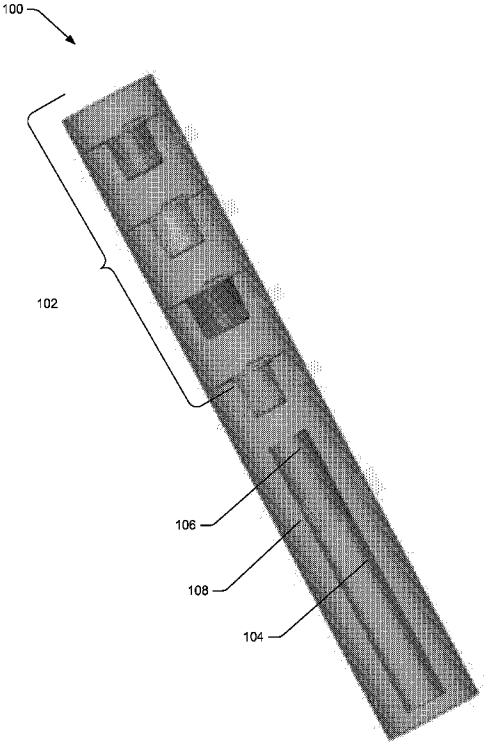

(57) Abrégé/Abstract:
This application describes example antimicrobial compositions that may be used alone or in combination with catheters and catheter insertion sites. According to another aspect, the application describes catheters which may employ one or more protection devices, such as cleaning caps, protective caps or both.

(12) INTERNATIONAL APPLICATION PUBLISHED UNDER THE PATENT COOPERATION TREATY (PCT)

(19) World Intellectual Property Organization
International Bureau

(43) International Publication Date
6 June 2013 (06.06.2013)

WIPO | PCT

(10) International Publication Number
WO 2013/082174 A1

(51) International Patent Classification:
A61M 25/01 (2006.01) *A61M 39/16* (2006.01)
A61M 25/16 (2006.01) *A61L 2/18* (2006.01)

(21) International Application Number:
PCT/US2012/066880

(22) International Filing Date:
28 November 2012 (28.11.2012)

(25) Filing Language: English

(26) Publication Language: English

(30) Priority Data:
61/564,206 28 November 2011 (28.11.2011) US

(71) Applicant: **HYPROTEK, INC.** [US/US]; 4219 E. 65th Avenue, Spokane, WA 99223-1806 (US).

(72) Inventor: **TENNICAN, Patrick, O.**; 4219 East 65th Avenue, Spokane, WA 99223 (US).

(74) Agents: **LEE, Lewis, C.** et al.; Lee & Hayes, PLLC, 601 W. Riverside Ave, Suite 1400, Spokane, WA 99201 (US).

(81) Designated States *(unless otherwise indicated, for every kind of national protection available)*: AE, AG, AL, AM, AO, AT, AU, AZ, BA, BB, BG, BH, BN, BR, BW, BY, BZ, CA, CH, CL, CN, CO, CR, CU, CZ, DE, DK, DM, DO, DZ, EC, EE, EG, ES, FI, GB, GD, GE, GH, GM, GT, HN, HR, HU, ID, IL, IN, IS, JP, KE, KG, KM, KN, KP, KR, KZ, LA, LC, LK, LR, LS, LT, LU, LY, MA, MD, ME, MG, MK, MN, MW, MX, MY, MZ, NA, NG, NI, NO, NZ, OM, PA, PE, PG, PH, PL, PT, QA, RO, RS, RU, RW, SC, SD, SE, SG, SK, SL, SM, ST, SV, SY, TH, TJ, TM, TN, TR, TT, TZ, UA, UG, US, UZ, VC, VN, ZA, ZM, ZW.

(84) Designated States *(unless otherwise indicated, for every kind of regional protection available)*: ARIPO (BW, GH, GM, KE, LR, LS, MW, MZ, NA, RW, SD, SL, SZ, TZ, UG, ZM, ZW), Eurasian (AM, AZ, BY, KG, KZ, RU, TJ, TM), European (AL, AT, BE, BG, CH, CY, CZ, DE, DK, EE, ES, FI, FR, GB, GR, HR, HU, IE, IS, IT, LT, LU, LV, MC, MK, MT, NL, NO, PL, PT, RO, RS, SE, SI, SK, SM, TR), OAPI (BF, BJ, CF, CG, CI, CM, GA, GN, GQ, GW, ML, MR, NE, SN, TD, TG).

[Continued on next page]

(54) Title: CATHETER DEVICES AND TECHNIQUES

(57) Abstract: This application describes example antimicrobial compositions that may be used alone or in combination with catheters and catheter insertion sites. According to another aspect, the application describes catheters which may employ one or more protection devices, such as cleaning caps, protective caps or both.

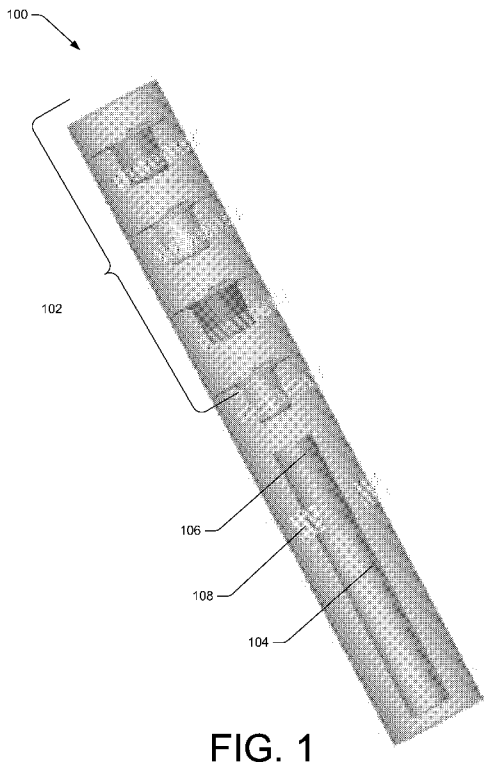

FIG. 1

WO 2013/082174 A1

WO 2013/082174 A1

Published:

— *with international search report (Art. 21(3))*

CATHETER DEVICES AND TECHNIQUES

[0001]

BACKGROUND

[0002] Infection remains a real problem in the medical industry today. Infections are often caused by contamination of intravascular (IV) lines (e.g., intravenous, intra-arterial, etc.), contamination of an injection site or blood draw site (e.g., from a vein, artery, or capillary), urinary catheters, wound sites, incision sites, and numerous other sources of infection in healthcare facilities. For example, in the United States alone, central venous catheters cause an estimated 80,000 catheter-related blood stream infections per year, which result in up to 28,000 deaths among patients in intensive care units. O'Grady NP, Alexander M, Dellinger EP, et al., *Guidelines for the prevention of intravascular catheter-related infections*. MMWR Recomm Rep 2002; 51:1-29. These numbers do not include infections caused by contamination of injection sites, blood draw sites, catheters, or any of the other numerous sources of contamination in healthcare facilities. Infection is even more of a problem in developing nations, where syringes, IV lines, and other equipment are routinely used and re-used for multiple different patients.

BRIEF SUMMARY OF THE INVENTION

[0003] This application describes approaches to reducing and/or preventing infections. In one aspect, the application describes example antimicrobial compositions that may be used alone or in combination with catheters and catheter insertion sites. According to another aspect, the application describes catheters which may employ one or more protection devices, such as cleaning caps, protective caps or both. This summary is not intended to identify essential features of the claimed subject matter, nor should it be used to limit the scope of the claims.

[0004] A first embodiment of the invention concerns a catheter assembly comprising a package containing a catheter and at least one cleaning device. The cleaning device may be a cleaning cap, a protective cap or both. Moreover, the catheter may have at least one port.

[0005] Another embodiment concerns a method for obtaining a urine specimen comprising providing a catheter assembly, the catheter assembly comprising a package containing a catheter and at least one cleaning cap, wherein the catheter has at least one port; opening the package to remove the cleaning cap; installing the catheter at a urological catheter insertion site; cleaning said port with a port cleaning device; and obtaining a urine sample via the port. The catheter and at least one cleaning cap are individually sealed in separate compartments of the package.

[0006] Yet another embodiment concerns a method for administering an antimicrobial composition to a urological site comprising providing a catheter assembly, the catheter assembly comprising a package containing a catheter and at

least one cleaning cap, wherein the catheter has at least one port; opening the package to remove the cleaning cap; installing a catheter at a urological catheter insertion site, said catheter having at least one port; cleaning said port with a port cleaning device; and administering an antimicrobial composition via the port. The catheter and at least one cleaning cap are individually sealed in separate compartments of the package.

According to an aspect of the present invention, there is provided a catheter assembly comprising a package containing a catheter and a plurality of cleaning devices,

wherein at least one of said cleaning devices is a cleaning cap, a protective cap or both, wherein said catheter has at least one port,

wherein the catheter and each of the plurality of cleaning devices are individually sealed in separate compartments of the package, and

wherein each of the plurality of cleaning devices is individually disposed in a compartment ahead of a tip of said catheter.

According to another aspect of the present invention, there is provided a method for using a catheter assembly comprising:

providing a catheter assembly, the catheter assembly comprising a package containing a catheter and at least one cleaning device, wherein the catheter has at least one port;

opening the package to remove the at least one cleaning device; and

after installation of the catheter at a catheter insertion site, cleaning said port with the at least one cleaning device;

wherein the catheter and each of the at least one cleaning device are individually sealed in separate compartments of the package.

BRIEF DESCRIPTION OF THE DRAWINGS

[0007] FIG. 1 shows a catheter assembly;

[0008] FIGs. 2A and 2B show details of an example cleaning device; and

[0009] FIG. 3A-3C show details of several example cleaning devices.

DETAILED DESCRIPTION

[0010] FIG. 1 illustrates an example of a catheter device and assembly which may, but need not necessarily, be used in connection with the antimicrobial compositions described herein. When used with the antimicrobial compositions described herein, however, the catheter device may provide disinfecting and/or therapeutic effects.

[0011] As shown in FIG. 1, a package 100 including one or more different site cleaning devices 102 coupled together with a catheter 104. The package 100 may comprise transparent, flexible, polymeric packaging allowing the user to see and inspect the contents of the package prior to use. The cleaning devices 102 and the catheter 104 may be individually sealed in separate compartments of the package 100, or they may be sealed together in a common compartment of the package 100. The

cleaning devices 102 may be used to clean a catheter insertion site prior to insertion of the catheter 104. According to an embodiment, the cleaning device can be a piece of material such as a piece of cloth, swab, or sponge. According to an embodiment, the cleaning devices 102 may be cleaning caps, protective caps or both as further described below.

[0012] The catheter 104 may comprise a urinary catheter or any other type of catheter. In the case where the catheter 104 is a urinary catheter, the catheter may be either a Foley type, longer use, or a simple, straight, single use catheter. In either case, the catheter 104 would include an antimicrobial gel lubricant 106 applied to and/or contained at a tip area compartment of the package 100. The package 100 may include a restrictor 108 (e.g., a portion of the package fused closely to an exterior of the catheter midway along the length of the catheter) to prevent the gel lubricant from covering the whole exterior of the catheter 104. The one or more cleaning devices 102 being disposed in one or more compartments ahead of the tip of the catheter 104, serve as a reminder to the user to clean and sanitize the catheter insertion site prior to insertion of the catheter. Once the site is cleaned, the catheter 104 may be inserted by peeling back the package 100 to expose the tip end of the catheter and holding the catheter via the package 100. In this way, the user need not even touch the catheter 104 during insertion, providing a "No Touch Cath" technique which even further reduces the risk of contamination and infection.

[0013] Additionally, in some embodiments, the lumen of the catheter 104 could be pre-filled with an antimicrobial composition such as those described herein.

[0014] Once the catheter 104 is installed, in some embodiments, the catheter may be used to obtain sterile, uncontaminated urine specimens via a urological catheter port. In that case, port cleaning and protection devices may be used to clean and protect the catheter port. The catheter port caps may use the same or different antimicrobial compositions than those used for the IV port cleaning and protective caps.

[0015] FIGS. 2A, 2B, and 3A-3C illustrate details of several example port cleaning and protective caps. Each of the caps may be made of materials such as, but not limited to, polyethylene, polypropylene, and/or copolymer materials. The caps may also comprise a material or agent that is UV protective to preserve the integrity of hydrogen peroxide during storage, shipping, etc. The caps themselves may additionally or alternatively be housed in a packaging that contains UV protective materials to inhibit breakdown of the hydrogen peroxide.

[0016] FIGS. 2A and 2B illustrate an example of an IV port protective cap 200 designed to thread onto a threaded port, such as a female Luer® connector, to provide a physical barrier against recontamination. As shown in FIG. 2A, the protective cap 200 is hermetically sealed by a protective cover 202. The protective cover 202 may be removably fused or bonded to the protective cap 200 by sonic welding, microwave welding, thermal fusion, or other bonding techniques. The protective cover 202 may be made of a same or different material than the protective cap 200. To facilitate the sealing of the protective cover 202 to the protective cap 200, as shown in FIG. 2B, the protective cap includes an energy director 204 disposed on a top surface of a rim 206 or flange surrounding an opening of the protective cap

200. The energy director 204 comprises a raised ridge or rib of material having a small cross section relative to the rim 206 of the protective cap 200. The small cross section of the energy director 204 allows the energy director to melt more quickly and to fuse with the protective cover 202 with less energy than that required to melt the entire rim 206 of the protective cap 200. The energy director 204 also allows the protective cover 202 to fuse to the protective cap 200 over a relatively thin region, thereby making the protective cover 202 easier to remove from the protective cap 200 than if it were fused over the entire area of the rim 206 of the protective cap 200.

[0017] The rim 206 is designed as a "no touch rim," which extends radially from the perimeter of the main body of the protective cap 200, thereby minimizing a likelihood that a user's fingers will come in contact with the internal surfaces of the protective cap during use. In the illustrated embodiment, the energy director 204 is disposed radially outward of an opening of the protective cap, but inward of an outer edge of the rim 206. This ensures that the portion of the rim 206 inside the energy director 204 remains sterile prior to use. The no touch rim 206 increases the likelihood that the portion of the rim 206 inside the energy director 204 remains sterile even during use. In other embodiments, the energy director may be disposed anywhere on the rim 206 (e.g., centrally as shown, at an inner perimeter of the rim proximate the opening, or at an outer perimeter of the rim).

[0018] As shown in FIG. 2B, the protective cap 200 also includes an applicator material 208 (shown in exploded view in this figure for clarity). In the illustrated example, the applicator material comprises a cylindrical foam material having an open cell region 210 around the circumference of the sides of the cylinder

and a closed cell region 212 on one or both axial ends of the cylinder. The open cell region 210 allows the applicator material 208 to absorb and carry an antimicrobial composition, such as those described above. The closed cell region 212 serves to at least partially cover and seal an end of an IV port to prevent the IV port from leaking and to prevent substantial amounts of the antimicrobial composition from entering the IV port. Both the open cell region 210 and the closed cell region 212 may have a certain amount of texture or roughness to scrub the IV port.

[0019] Also, while applicator material 208 is illustrated as being a generally cylindrical body, in other embodiments, the applicator material may take on other shapes and/or sizes. Further, the applicator material 208 may include different surface treatments (e.g., siping, slitting, etc.), surface finishes (e.g., macro-, micro-, or nano-structures, etc.), and/or contours (e.g., rounded, ribbed, protrusions, fingers, etc.).

[0020] FIGS. 3A-3C illustrate several variations of IV port protective caps 300A, 300B, and 300C, respectively (collectively referred to as protective caps 300), for use with IV port connectors of varying outer diameter (OD), such as male Luer® connectors. The protective caps 300 of these embodiment are slip fit caps, in that they are designed to slip over and fit securely on IV port connectors of varying OD, since not all port connectors have standardize OD.

[0021] FIG. 3A illustrates a protective cap 300A having a stepped inner surface, including a first inner surface 302 and a second inner surface 304, the second inner surface 304 having a smaller average diameter than the first inner surface. The first and second inner surfaces 302 and 304 may have diameters chosen to match ODs of common ports on the market, of maximum and minimum ODs of ports on the

market, or based on other criteria. Further both of the first and second inner surfaces 302 and 304 may be tapered (i.e., have a draft angle Θ), such that a diameter of the first and second inner surfaces is largest closest to an opening of the protective cap 300A and decreases toward the bottom, closed end of the protective cap. A draft angle of the first inner surface 302 may be the same as, greater than, or less than a draft angle of the second inner surface 304. When the protective cap 300A is placed on an IV port, the protective cap 300A will slide over the IV port until an OD of the IV port contacts and seals against the interior surface of the protective cap 300A at either the first inner diameter 302 (in the case of an IV port with a relatively large OD) or the second inner diameter 304 (in the case of an IV port with a relatively small OD).

[0022] FIGS. 3B and 3C illustrate alternative embodiments of slip fit protective caps 300B and 300C, respectively, which have continuous, smooth inner surfaces. Rather than being stepped as in the embodiment of FIG. 3A, the protective caps 300B and 300C have continuous, smooth inner surfaces. Like the inner surfaces of the stepped protective cap 300, the inner surfaces of the protective caps 300B and 300C are tapered to accommodate IV ports of varying OD. However, in order to accommodate IV ports having a wide range of ODs, the draft angle Θ of the protective caps needs to be larger (i.e., a more pronounced taper) as in the case of protective cap 300B, and/or the protective cap needs to be made deeper, as in the case of protective cap 300C.

[0023] Additional details of example IV port cleaning and protective devices may be found in U.S. Patent No. 8,162,899, to Tennican.

[0024] Additionally or alternatively, a flush syringe could be used to introduce a flush solution to flush the catheter lumen, bladder, ureter, renal pelvis, or other portions of the urinary tract. The flush solutions used may vary depending on the site to which it is to be delivered, e.g., catheter lumen, bladder, ureter, renal pelvis. In some examples, liquid antimicrobial compositions such as those described herein may be used as the flush solution.

[0025] According to an embodiment, the catheter assembly includes an antimicrobial composition. Exemplary antimicrobial compositions that may be used in connection with the approaches described herein may include those described in, for example, U.S. Patent Application No. 8,778,387, filed September 1, 2010, to Tennican et al. In that case, the antimicrobial compositions may include water (H_20), a strong and non-toxic chelating agent such as ethylenediaminetetraacetic acid (EDTA)(e.g., disodium EDTA, calcium disodium EDTA, magnesium EDTA, gallium EDTA) or sodium citrate (or acids, salts, derivatives, or other forms of EDTA or sodium citrate), a short-chain monohydric alcohol (e.g., ethanol with a molecular formula of C_2H_5OH and an empirical formula of C_2H_6O), and a strong, small molecule oxidizing agent such as hydrogen peroxide (H_2O_2). In one specific example, the compositions may consist essentially of water, EDTA, ethanol, and hydrogen peroxide. However, in other

examples, other antimicrobial compositions may be used in combination with the devices described in this application.

[0026] The antimicrobial compositions may be in a liquid form or a gel form, and may be combined with one or more carriers or diluents, depending on the needs of a specific application. For example, in applications in which the antimicrobial composition is used as a hand sanitizer, the antimicrobial composition may be in a gel. As another example, if the antimicrobial composition is used as a cleaning agent, a flush solution, or an irrigant, the antimicrobial composition may be in a liquid form. In that case, the concentration of the various constituents may depend on, for example, a desired level of disinfection, whether the composition is being applied directly to living tissue or to a medical device, and/or to avoid irritation of tissue to which the composition will be applied directly or indirectly (e.g., via a medical device to which the composition is or was applied). In yet another example, the antimicrobial compositions may include or be combined with a lubricant (e.g., glycerin), surfactant or emulsifier (e.g., glycerol monolaurate (GML)), or the like and may be applied to a catheter, tracheal tube, scope, instrument, or other device that is to be inserted into a patient's body.

[0027] In other embodiments, for therapeutic treatment of localized infections and/or pre-malignant and malignant lesions in the urethra, bladder, ureter, renal pelvis, antimicrobial compositions such as those described herein may be delivered through a catheter or via direct observations via a cystoscope or ureteroscope or nephrostomy scope.

[0028] In still other embodiments, the antimicrobial compositions such as those described herein may be used as an irrigant to flush a catheter to prevent the buildup of biofilms and/or to break up the formation of stones.

[0029] Although the application describes embodiments having specific structural features and/or methodological acts, it is to be understood that the claims are not necessarily limited to the specific features or acts described. Rather, the specific features and acts are merely illustrative some embodiments that fall within the scope of the claims of the application.

The embodiments of the invention in which an exclusive property or privilege is claimed are defined as follows:

1. A catheter assembly comprising a package containing a catheter and a plurality of cleaning devices,

wherein at least one of said cleaning devices is a cleaning cap, a protective cap or both, wherein said catheter has at least one port,

wherein the catheter and each of the plurality of cleaning devices are individually sealed in separate compartments of the package, and

wherein each of the plurality of cleaning devices is individually disposed in a compartment ahead of a tip of said catheter.

2. The catheter assembly according to claim 1, wherein the package is transparent.

3. The catheter assembly according to claim 1, wherein the catheter is a urinary catheter.

4. The catheter assembly according to claim 1, wherein the package further includes an antimicrobial gel lubricant applied to and/or contained at a tip area of the catheter.

5. The catheter assembly according to claim 4, wherein a portion of the package is fused closely to an exterior of the catheter midway along the length of the catheter to prevent the antimicrobial gel lubricant from migrating away from the tip area and covering another area of the catheter.

6. The catheter assembly according to claim 1, wherein at least a portion of an inside of the catheter contains an antimicrobial composition.

7. The catheter assembly according to claim 1, further comprising an applicator material contained within the at least one cleaning device.

8. The catheter assembly according to claim 7, wherein the applicator material includes an antimicrobial composition.

9. A method for using a catheter assembly comprising:

providing the catheter assembly, the catheter assembly comprising a package containing a catheter and at least one cleaning device, wherein the catheter has at least one port;

opening the package to remove the at least one cleaning device; and

after installation of the catheter at a catheter insertion site, cleaning said port with the at least one cleaning device;

wherein the catheter and each of the at least one cleaning device are individually sealed in separate compartments of the package.

10. The method according to claim 9, wherein the package also contains at least one protective cap and the method further comprising covering the port with the protective cap.

11. The method according to claim 9, wherein the package further includes an antimicrobial gel lubricant applied to and/or contained at a tip area of the catheter.

12. The method according to claim 11, wherein a portion of the package is fused closely to an exterior of the catheter midway along the length of the catheter to prevent the antimicrobial gel lubricant from migrating away from the tip area and covering another area of the catheter.

13. The method according to claim 9, further comprising an applicator material contained within the port cleaning device.

14. The method according to claim 13, wherein the applicator material includes an antimicrobial composition.

15. The method according to claim 9, wherein the at least one port is adapted to obtain a sample.

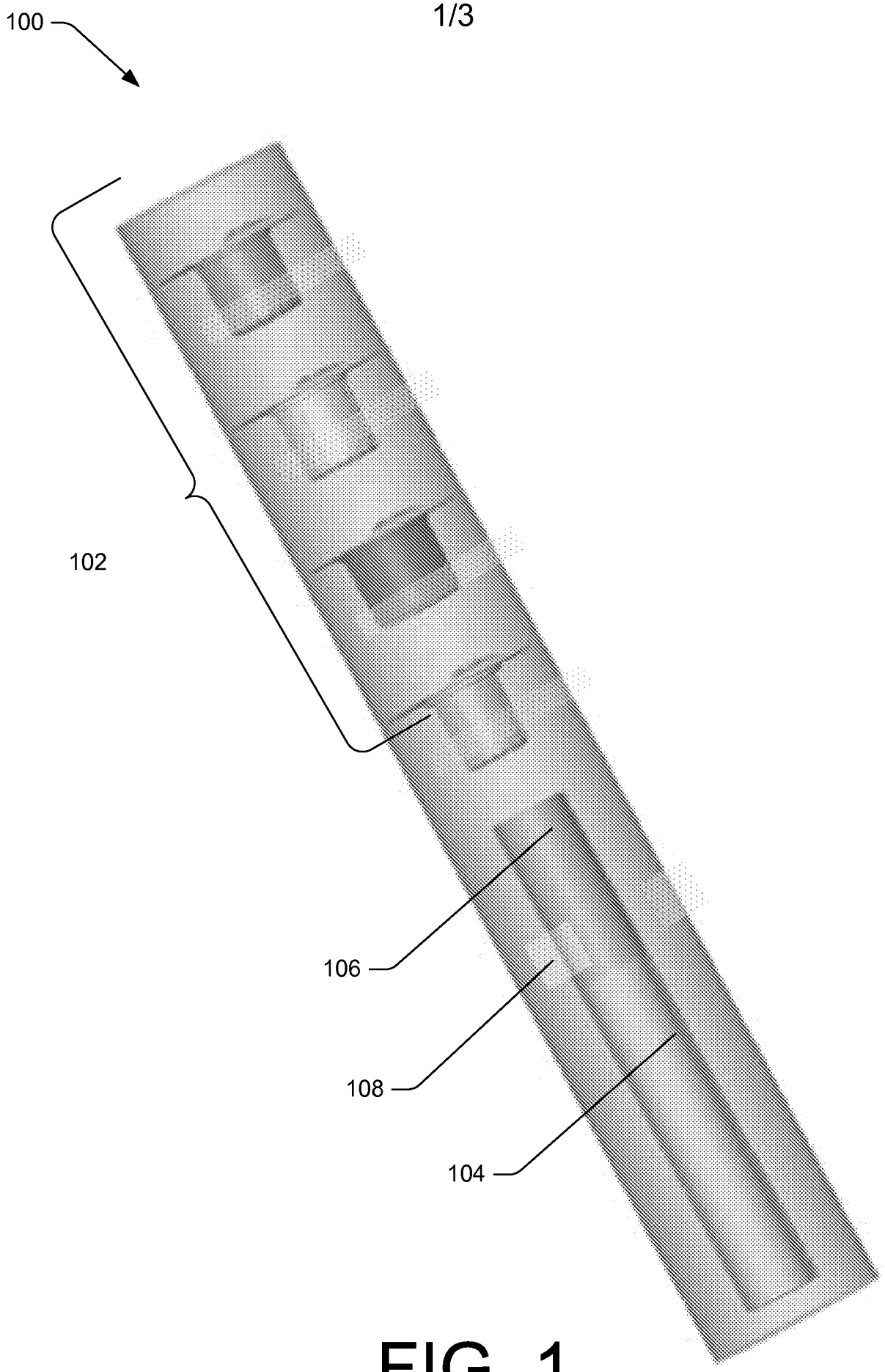

FIG. 1

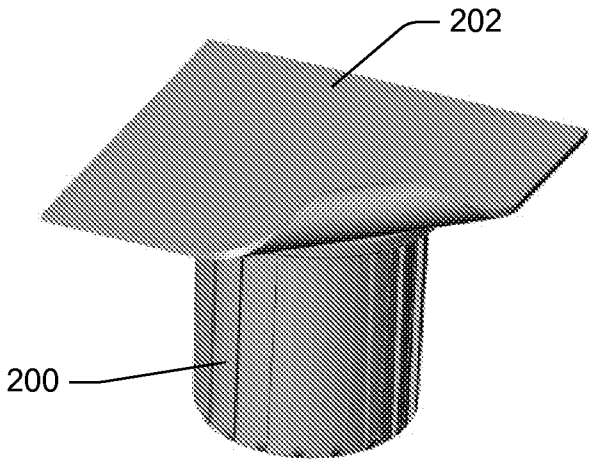

FIG. 2A

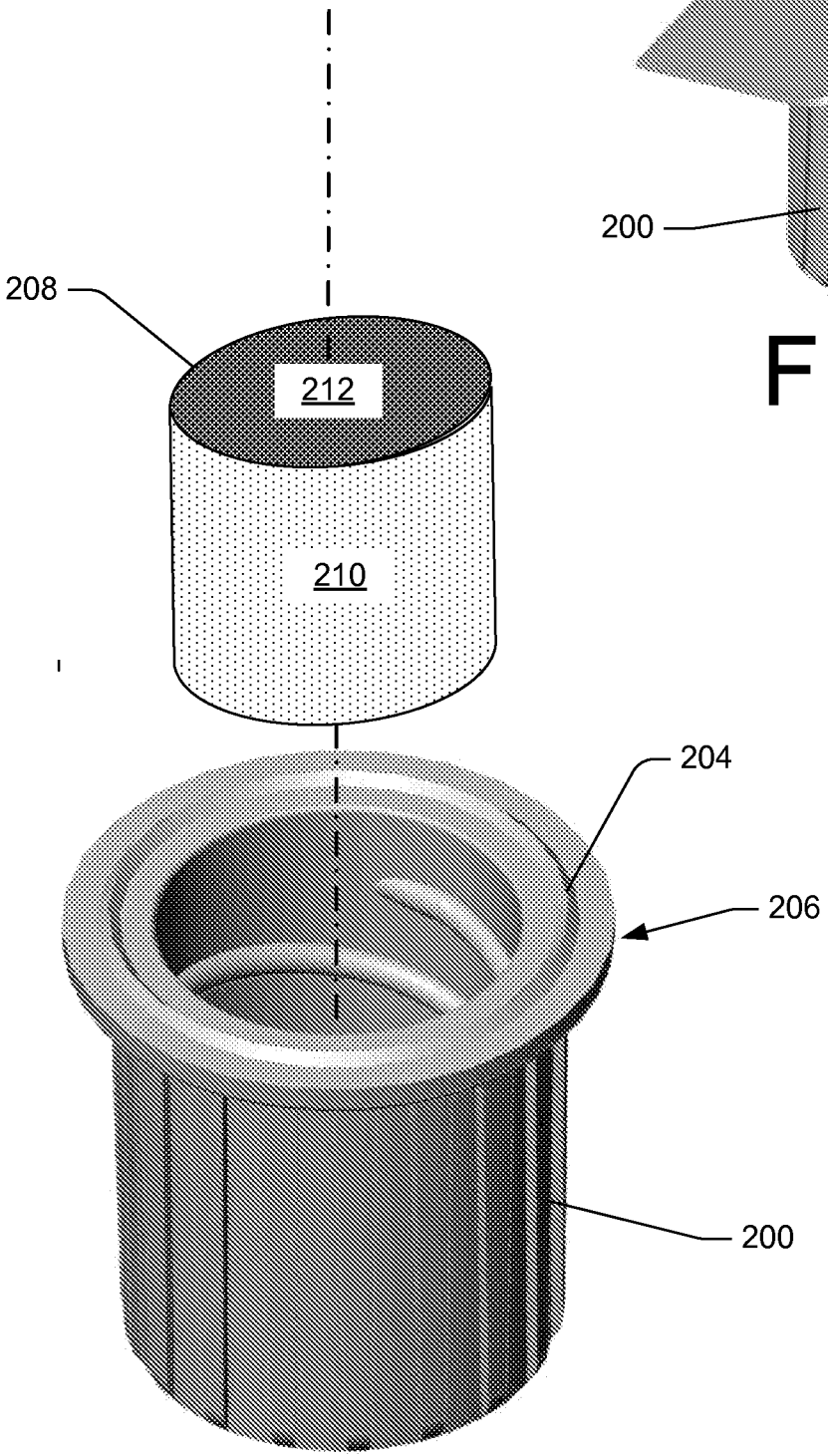

FIG. 2B

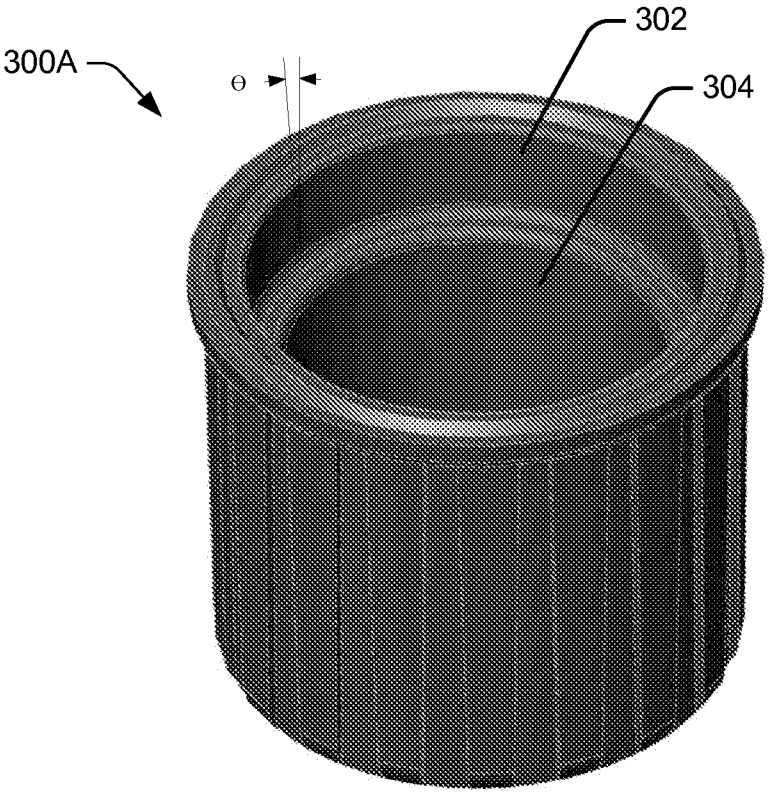

FIG. 3A

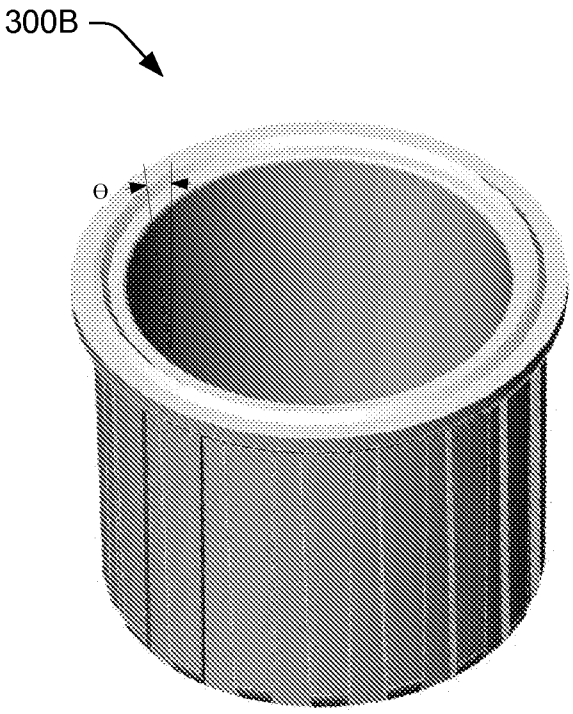

FIG. 3B

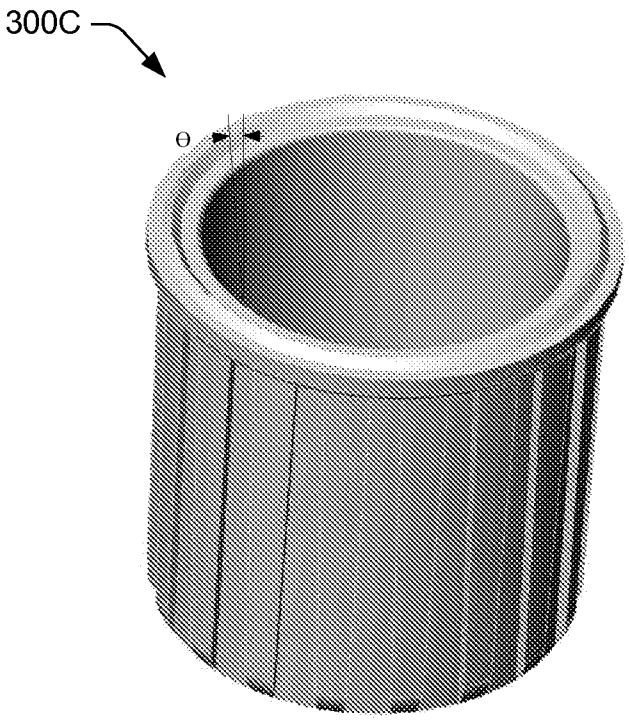

FIG. 3C

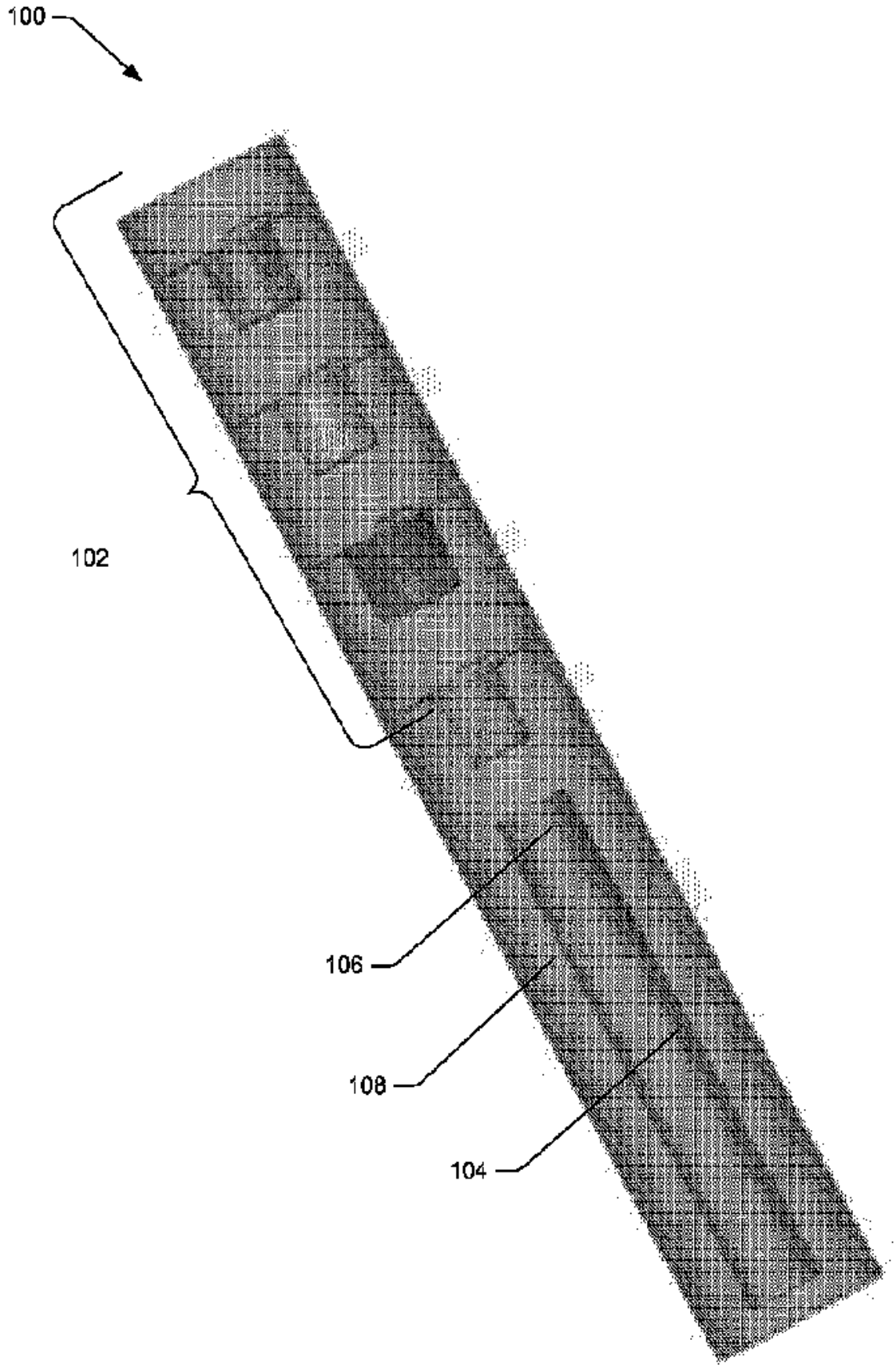
100
102
106
108
104