Oct. 17, 1933. H. F. KEIL 1,931,321

SHELF BRACKET CONSTRUCTION

Filed July 21, 1931

Fig. 1.

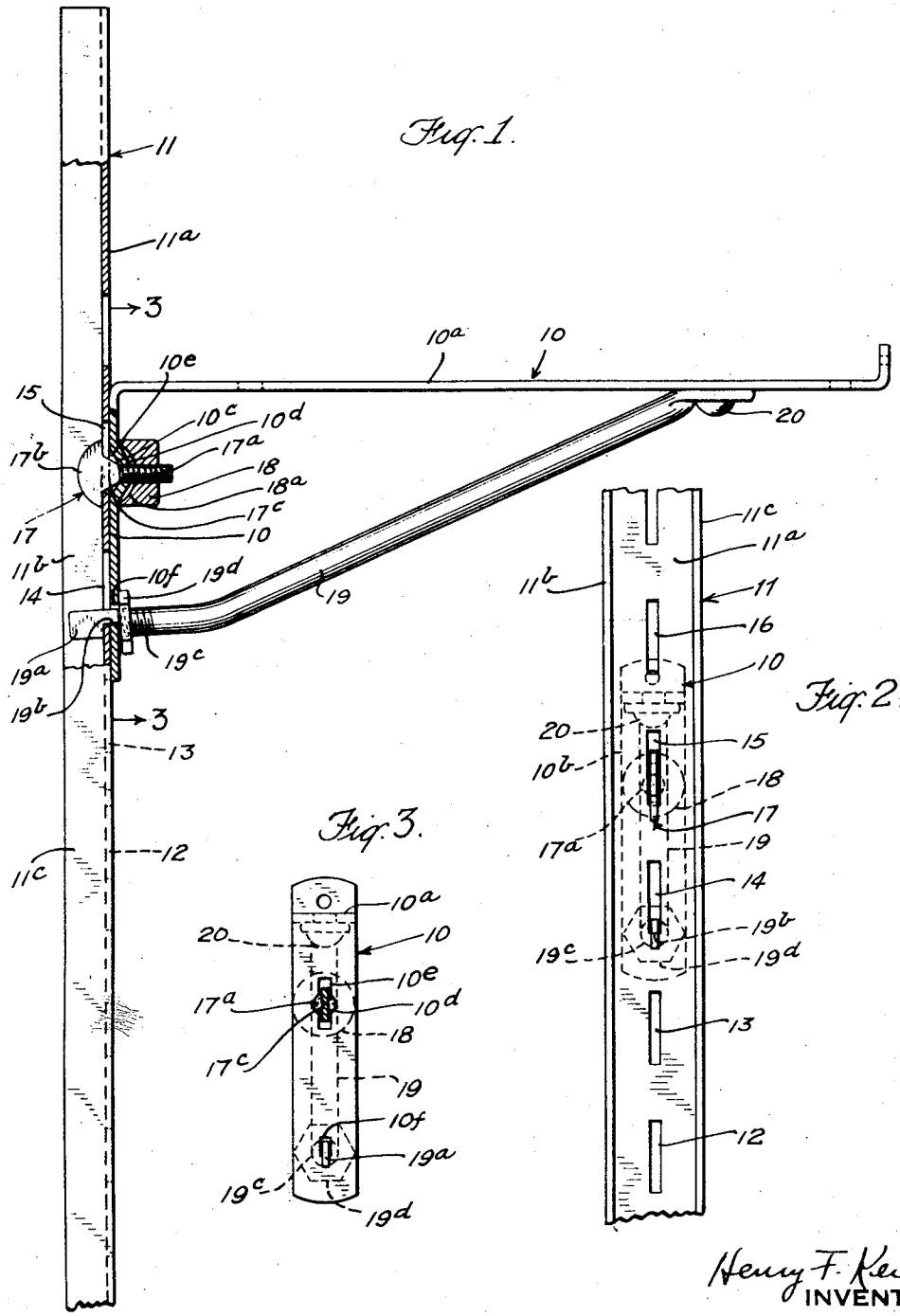

Fig. 2.

Fig. 3.

Henry F. Keil
INVENTOR

BY his ATTORNEYS
Janney, Blair & Curtis

Patented Oct. 17, 1933 1,931,321

UNITED STATES PATENT OFFICE

1,931,321

SHELF BRACKET CONSTRUCTION

Henry F. Keil, Scarsdale, N. Y., assignor to Francis Keil & Son, Inc., a corporation of New York

Application July 21, 1931. Serial No. 552,085

2 Claims. (Cl. 248—19)

This invention relates to construction for brackets or supporting shelves or the like.

One of the objects of this invention is to provide a simple and inexpensive but thoroughly dependable shelf bracket construction. Another object is to provide a bracket construction that will be neat in appearance and will avoid the many disadvantages inherent in known types of bracket constructions in which the vertical supporting member is provided with so-called "keyhole" slots. Another object is to provide a bracket construction of the above-mentioned character in which assembly and disassembly of the bracket with respect to its vertical support may be readily and conveniently achieved. Other objects will be in part obvious or in part pointed out hereinafter.

The invention accordingly consists in the features of construction, combinations of elements, and arrangements of parts as will be exemplified in the structure to be hereinafter described and the scope of the application of which will be indicated in the following claims.

In the accompanying drawing in which is shown a preferred embodiment of my invention,

Figure 1 is a side elevation, partly in central vertical section, of the assembled bracket construction;

Figure 2 is an end elevation as seen from the left in Figure 1, and

Figure 3 is an end elevation of the bracket per se, as it appears from the left in Figure 1 but with the vertical support in that figure removed.

Similar reference characters refer to similar parts throughout the several views of the drawing.

As conducive to a clearer understanding of certain features of my invention, it may at this point be noted that bracket constructions have heretofore been proposed in which the vertically extending support is provided with a series of keyhole slots in order to accommodate the head of the clamping bolt through the large part of the slot and the shank of the clamping bolt in the narrow part of the slot; these bolts have to be of substantial size for practical requirements and hence the keyhole slots individually are likewise large, resulting in a great weakening of the vertical support (the latter being generally of sheet metal of channel cross-section) together with a very unsightly appearance. When used in display windows or show cases, this keyhole slot construction is highly disadvantageous and its unsightliness is all the more pronounced by the necessarily greater width of stock required in the vertical supports. One of the dominant aims of this invention is to avoid such objections and disadvantages as have just been noted.

Referring now to the drawing and more particularly to Figure 1, I have shown a bracket generally indicated at 10 and made up of flat stock or strap metal bent at right angles to provide a horizontal shelf-supporting portion 10^a and a vertically extending portion 10^b adapted to rest against the front face 11^a of a vertically extending support 11.

The vertical supporting member 11 is made of sheet metal of suitable gage and is of channel cross-section, having a front wall 11^a and two rearwardly extending flanges 11^b and 11^c, the latter being adapted to rest against a wall and the support 11 being secured to the latter in any suitable manner as by screws or bolts.

The vertical support 11 is provided with a series of vertically arranged slots, such as the slots 12, 13, 14, 15, 16, etc. (Figures 2 and 1) which are of relatively small width; hence the width of the supporting member 11, as viewed in Figure 2, may be much less than is the case if these slots were of the keyhole shape. Also, I am enabled to use a lighter gage or weight of metal for the channel 11 for a given load as compared with the channel having keyhole slots because in the latter case so much metal has been removed from the cross-section that, to provide adequate strength in so much of the cross-section as is allowed to remain, the weight or gage of the metal used must be much greater than with the construction that I employ. These narrow slots 12, 13, etc., are suitably spaced from one another, as is indicated in Figures 2 and 1.

As is better shown in Figure 1, the vertical portion 10^b of the bracket 10 is of sufficient length to more than overlap two successive slots in the channel 11; adjacent its upper end, portion 10^b is forced or bowed toward the right, as by a punch, as is indicated at 10^c, and this bulging part 10^c is provided with a round hole 10^d (see Figure 3) through which passes the round threaded shank 17^a of a clamping device generally indicated at 17. The bulging part 10^c extends preferably only vertically to provide a vertically extending slot or recess 10^e in the rear or left-hand face of the vertical portion 10^b of the bracket 10. The clamping member 17 has a head 17 (see Figures 3 and 1) adapted to pass through any one of the slots 12, 13, etc., in the vertical support 11, and this head 17^b is joined to the

cylindrical threaded shank 17^a by an intermediate flattened shank portion 17^c that fits into the vertically extending recess 10^e. A nut 18 is threaded onto the shank 17^a and it is of a diameter greater than the vertically extending bulging part 10^c, its left-hand end face 18^a being concaved so as to extend over this portion 10^c and so that the peripheral left-hand end portions of the nut 18 engage squarely against the plane face of the vertical portion 10^b of the bracket 10.

The flattened shank portion 10^c, in thus interfitting with the vertically extending recess 10^e, prevents the rotation of the clamping device 17 unless, of course, the nut 18 is backed off the threaded shank 17^a sufficiently to permit the shank portion 17^c to ride out of the recess 10^e. Thus, the head 17^b is always held so that it extends or lies in a vertical plane and is thus always in appropriate alinement for passage through a slot in the vertical member 11. The head 17^b, moreover, is shaped so that a part of it can, upon the bracket 10 being dropped after the head 17^b has been inserted through a slot, take in back of the wall 11^a so that a subsequent tightening up of the nut 18 securely clamps the bracket 10 between the nut and the head 17^b.

A brace 19, preferably of round stock, extends diagonally from the outer end of the bracket portion 10^a to which it is secured as by a rivet 20 and at its lower or left-hand portion, the brace 19 is flattened as at 19^a where it passes through an opening 10^f in the bracket portion 10^b and is recessed as at 19^b to form substantially a hook which passes through a slot below that through which the clamping head 17^b has been passed and which, like the latter, takes in back of the front wall 11^a of the vertical support 11.

The round portion of the brace 19 adjacent the flattened end 19^a is threaded as at 19^c and carries a nut 19^d which, when the parts are assembled as shown in Figure 1, may be threaded toward the left and thus coact with the clamping device 17 in clamping the bracket 10 to its support 11.

As is better shown in Figures 2 and 3, the plane of the flattened portion 19^a is vertical and is substantially coincident with the vertical plane of the clamping head 17^b. These flattened portions 17^b and 19^a are thus in vertical alinement (see Figure 3) and are spaced vertically from each other so that they may readily be inserted through two of the slots in the channel support 11; in Figures 1 and 2 these parts will be seen to be inserted through the slots 15 and 14, respectively, and, upon the bracket 10 being thereupon moved downwardly, these two parts take in back of the front wall 11^a, as is better shown in Figure 1.

The nut 18, which is preferably knurled for manual operation, may then be tightened up so as to securely clamp the parts 11^a and 10^b together. The nut 19^d on the brace 19 may also be utilized to clamp these two parts together in coaction with the part 19^a, or it may be used to adjust the shelf-supporting portion 10^a of the bracket into the desired horizontal plane.

By reason of such features of construction as I have above described, I am able to provide a neat and compact shelf support; the stock or strap material used in the portions 10^a—10^b may be of any desired width and because I am able to use narrow slots in the vertical support 11, the latter can be made much narrower than has been heretofore the case and in fact it may be made of a width substantially equal to or closely approximating the width of the strap metal used in the bracket portions 10^a—10^b without sacrificing rigidity or strength. Such advantages as these it is impossible to achieve with the known type of bracket construction where keyhole slots are employed. Furthermore, the indented or bulging part 10^c of the vertical portion 10^b of the bracket extends vertically and is of relatively narrow width; it may thus be readily accommodated in a strap material of less width than it has heretofore been necessary to employ.

It will thus be seen that there has been provided in this invention a construction in which the various objects noted, together with many thoroughly practical advantages are successfully achieved and that I am enabled to achieve a neater appearance and a more compact and less expensive construction, all without sacrificing rigidity, strength, or dependibility of action.

As many possible embodiments may be made of the above invention and as many changes might be made in the embodiment above set forth, it is to be understood that all matter hereinbefore set forth, or shown in the accompanying drawing, is to be interpreted as illustrative and not in a limiting sense.

I claim:

1. In bracket construction, in combination, a vertical support having vertically extending narrow slots, a bracket made of strap metal having a horizontal portion for receiving a shelf or the like and a vertical portion adapted to rest against said support, said vertical portion having an outwardly bulged part with a central aperture therein, and clamping means having a part extending through said aperture and another part shaped to pass through a slot in said support and an intermediate part interlocked against rotation with said bulged part and a nut threaded onto said first part and concaved to encompass therein said bulged part, for securing said bracket to the latter.

2. In bracket construction, in combination, a vertical support having vertically extending narrow slots, a bracket made of strap metal having a horizontal portion for receiving a shelf or the like and a vertical portion adapted to rest against said support, said vertical portion having an outwardly bulged part with a central aperture therein and having a hole vertically spaced from said bulged part, a bracing member diagonally connecting said two portions of said bracket and having a narrow hook-shaped part projecting through said hole in said vertical portion and adapted to be received by one of said slots, said outwardly bulged part being, upon the concave face thereof, provided with a vertically extending slot adapted substantially to register with one of the slots in said vertical support, and a clamping bolt extending through one of the slots in said vertical support and through said aperture in said bulged part, said bolt having a narrow vertically extending head adapted to pass through said slot and a flat shank portion extending into said bulging part and seated into the vertical slot in the latter, whereby the slot in the bulged part and said shank prevent rotation of the bolt relative to said bracket, and a nut between which and said head said support and vertical portion are clamped together.

HENRY F. KEIL.