AUSTRALIA
PATENTS ACT 1990
NOTICE OF ENTITLEMENT

I, **Vaclav Pistek**, the applicant/Nominated Person in respect of Application No. 63729/94 state the following:-

The Nominated Person is entitled to the grant of the patent because the Nominated Person is the inventor.

The Nominated Person is entitled to claim priority from the application listed in the declaration under Article 8 of the PCT because the Nominated Person made the application listed in the declaration under Article 8 of the PCT.

DATED this TWENTY NINTH day of DECEMBER 1995

.....

a member of the firm of
DAVIES COLLISON CAVE
for and on behalf of the
applicant(s)

(DCC ref: 1785413)

AU9463729

(12) PATENT ABRIDGMENT (11) Document No. AU-B-63729/94
(19) AUSTRALIAN PATENT OFFICE (10) Acceptance No. 675523

(54) Title
PRESSURE CONTAINER, ESPECIALLY FOR A FIRE-EXTINGUISHING AGENT

International Patent Classification(s)
(51)[5] A62C 013/66 A62C 003/07 B05B 009/04

(21) Application No. : 63729/94 (22) Application Date : 14.04.94

(87) PCT Publication Number : WO94/23799

(30) Priority Data

(31) Number	(32) Date	(33) Country
9300675	20.04.93	CZ CZECH REPUBLIC

(43) Publication Date : 08.11.94

(44) Publication Date of Accepted Application : 06.02.97

(71) Applicant(s)
VACLAV PISTEK

(72) Inventor(s)
VACLAV PISTEK

(74) Attorney or Agent
DAVIES COLLISON CAVE , 1 Little Collins Street, MELBOURNE VIC 3000

(57) Claim

1. A pressure container, especially for fire-extinguishing agent, comprising a protective flask made e.g. of aluminium or plastic material and provided with a deaerating vent and in the upper part with a neck having an upwards opened circular bed formed at its inner periphery, there being a lid with a pressure valve removably fixed on the neck, the container being characterized in that between said circular bed (5) and said lid (8) a bead (6) of an elastic storage bag (7) is clamped, said bead (6) being partly inserted into the inner area of the protective flask (1), while to said pressure valve (10) a working bag (11) is fastened, said working bag (11) being partly inserted into the inner area (13) of the elastic storage bag (7), into which a charge and discharge valve (14), built in in the lid (8) and provided outside thereof with a spraying discharge nozzle (15).

OPI DATE 08/11/94 APPLN. ID 63729/94
AOJP DATE 22/12/94 PCT NUMBER PCT/CZ94/00013

AU9463729

INTERNATIONAL APPLICATION PUBLISHED UNDER THE PATENT COOPERATION TREATY (PCT)

(51) International Patent Classification 5 :
A62C 13/66, 3/07, B05B 9/04

A1

(11) International Publication Number: WO 94/23799

(43) International Publication Date: 27 October 1994 (27.10.94)

(21) International Application Number: PCT/CZ94/00013

(22) International Filing Date: 14 April 1994 (14.04.94)

(30) Priority Data:
PV 675-93 20 April 1993 (20.04.93) CZ

(71)(72) Applicant and Inventor: PÍŠTĚK, Václav [CZ/CZ]; Hluk č. 497, 687 25 Hluk (CZ).

(74) Agent: SEDLÁK, Zdenek; Mendlovo nám. la, 603 00 Brno (CZ).

(81) Designated States: AT, AU, BB, BG, BR, BY, CA, CH, CN, CZ, DE, DK, ES, FI, GB, HU, JP, KP, KR, KZ, LK, LU, LV, MG, MN, MW, NL, NO, NZ, PL, PT, RO, RU, SD, SE, SK, UA, US, UZ, VN, European patent (AT, BE, CH, DE, DK, ES, FR, GB, GR, IE, IT, LU, MC, NL, PT, SE), OAPI patent (BF, BJ, CF, CG, CI, CM, GA, GN, ML, MR, NE, SN, TD, TG).

Published
With international search report.
Before the expiration of the time limit for amending the claims and to be republished in the event of the receipt of amendments.

(54) Title: PRESSURE CONTAINER, ESPECIALLY FOR A FIRE-EXTINGUISHING AGENT

(57) Abstract

A pressure container is created for fire-extinguishing agent, which comprises a protective flask (1) made e.g. of aluminium or plastic material and which is provided with a deaerating vent (3) and in the upper part with a neck (4) having an upwards opened circular bed (5) formed at its inner periphery, there being a lid (8) with a pressure valve (10) removably fixed on the neck (4). A bead (6) of an elastic storage bag (7), partly inserted into the inner area of the protective flask (1), is clamped between the circular bed (5) and the lid (8). A working bag (11) is fastened to the pressure valve (10), the bag being partly inserted into the inner area (13) of the elastic storage bag (7), into which a charge and discharge valve (14) mouths, said charge and discharge valve (14) being built in into the lid (8) and provided with a spraying discharge nozzle (15) outside of the lid (8).

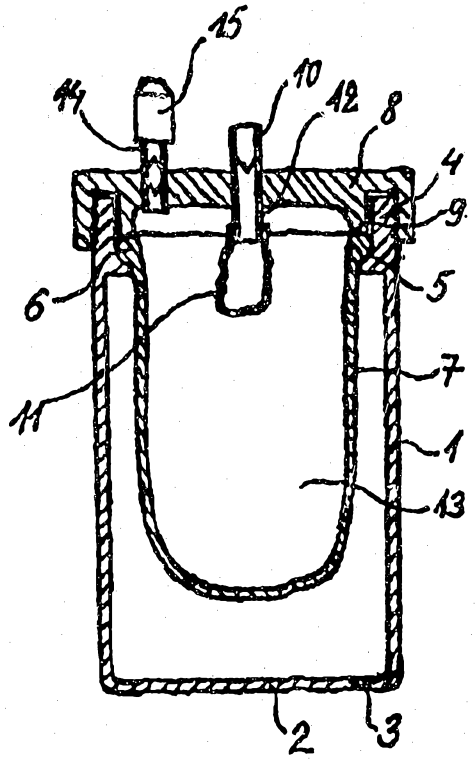

PRESSURE CONTAINER, ESPECIALLY FOR A FIRE-EXTINGUISHING AGENT

FIELD OF THE INVENTION

The invention relates to a pressure container, especially for a fire-extinguishing agent, comprising a protective flask made e.g. of aluminium or plastic material and provided with a deaerating vent and in the upper part with a neck having an upwards opened circular bed formed at its inner periphery, there being a lid with a pressure valve removably fixed on the neck.

BACKGROUND OF THE INVENTION

Known pressure containers are usually formed by a metal pressure vessel in which a utility agent, e.g. hair lacquer, perfume, liquid soap, mustard etc., is placed. To force the utility agent out of the pressure container producers usually use freon, but at present also less harmful agents such as propane-butane are used. It is also known use of air in containers, usually provided with a special arrangement of the inner space of the pressure vessel not allowing the agent to contact the air.

Another known solution is a use of memory characteristics of elastic material, e.g. of a rubber, to force out the utility agent.

Yet another known solution is a pressure container comprising a protective flask in which an elastic bag is arranged, the elastic bag being sealed to a charge and dis-

charge valve situated in the lid of the protective flask. In this known solution, in order to prevent a contact between the utility agent and the inner surface of the elastic bag, a foil which is inert to the utility agent and which is fixed also to said valve is used. The utility agent is forced out of the pressure container by the contraction of the elastic bag.

There is no gaseous working medium used in the above mentioned case. Its practical use is nevertheless problematic because a relatively large rest content remains in the elastic bag and cannot be forced out by said bag.

Another pressure container comprising also just a protective flask, e.g. of a plastic material, is provided with a closed hollow elastic storage bag sealed by the lid periphery, and with a charge valve which serves at the same time as a discharge valve arranged over the elastic storage bag and in the lid. The discharging of the utility agent out of the space above the upper part of the closed concave elastic storage bag is performed in this case by contraction of the material of the concave upper part of the closed hollow storage bag. Then in the last phase it is performed by expansion of the gaseous medium compressed during filling of the pressure container inside of the closed hollow elastic storage bag which results in complete discharge of the utility agent.

Hand-operated fire-extinguisher, beside other fire-extinguishing means, are also known and used. These

hand-operated fire-extinguishers comprise usually steel pressure container with a fire-extinguishing agent, e.g. with water, powder, foam, etc., which is either under constant pressure of gas, or which is provided with a closed, easily breakable ampule with a chemical creating overpressure when mixed with water or other chemical, the overpressure being able to discharge the fire-extinguishing agent out from the fire-extinguisher.

The use of pressure container with freon serving as working medium is on the decline, due to the well known reasons. When using other working media it is necessary to take various steps to prevent any contact between the working medium and the utility agent, and this leads to an increase of operating costs. Besides that, the propane-butane, which is used in such devices, is an inflammable gas. This property excludes the possibility of using said gas e.g. in fire-extinguishers. That goes for air as well, as the contact between the air and the utility agent is usually undesirable and if used in a fire-extinguisher it would support the fire.

It is not advantageous to use chemicals to create an overpressure in fire-extinguishers. A disadvantage of some of the fire-extinguishers is namely the possibility of their explosion.

SUMMARY OF THE INVENTION

The mentioned disadvantages are removed or at least moderated by a pressure container, especially for

fire-extinguishing agent, comprising a protective flask made e.g. of aluminium or plastic material and provided with a deaerating vent and in the upper part with a neck having an upwards opened circular bed formed at its inner periphery, there being a lid with a pressure valve removably fixed on the neck, the gist of the solution of the problem being that between said circular bed and said lid a bead of an elastic storage bag is clamped, said bead being partly inserted into the inner area of the protective flask, while to said pressure valve a working bag is fastened, said working bag being partly inserted into the inner area of the elastic storage bag, into which a charge and discharge valve, built in in the lid and provided outside thereof with a spraying discharge nozzle.

It is advantageous to provide the casing of the protective flask with at least one outlet with a tip covered by a thermal fuse at a place opposing the outer wall of the elastic storage bag.

It also advantageous to form the thermal fuse of a fire meltable or combustible material.

An advantage of the present pressure container is that it does not use harmful agent for discharging of the pressure flask, it makes repeated use possible, no explosion danger of the pressure flask threatens as it may especially when using known fire-extinguisher. Another advantage is a complete discharge of the content of the fire-extinguisher. When used as fire-extinguisher, the present invention makes it possible to use both the discharge

valve and the outlets with thermal fuses, which enables e.g. throwing of the pressure container directly into the fire and in such a way to increase the fire-extinguishing effect. There may be formed a barrier for prevention of fire spreading. The pressure container may also be arranged as a precaution in places where fire could arise, e.g. in motor space of motor vehicles. The elastic storage bag of the pressure container may be filled not only with water but also with other fire-extinguishing agents, such as powder, foam, trichloroethylene etc.

BRIEF DESCRIPTION OF THE DRAWINGS

A preferred embodiment of the invention will be described with reference to the accompanying drawings, in which

Fig. 1 shows an empty pressure container in a vertical axial section,

Fig. 2 shows a pressure container filled with fire-extinguishing agent in a vertical axial section,

Fig. 3 a pressure container in the state of preparedness in a vertical axial section, and

Fig. 4 an outlet with a thermal fuse in a vertical axial section.

DETAILED DESCRIPTION OF THE EMBODIMENT

The pressure container comprises a protective flask 1 which is made of aluminium or plastic material and which is

provided, preferably at its bottom 2, with a deaerating vent 3, and at its top part, with a neck 4. The neck 4 is provided, at its inner periphery, with a circular bed 5 which is open in upward direction, and in which an elastic storage bag 7 for fire-extinguishing agent is inserted with its bead 6. The neck 4 is covered by a lid 8, which is preferably bolted to the neck 4, the peripheral part of the front surface 9 of the lid 8 adjoining the bead 6 of the elastic storage bag 7. A common pressure valve 10 is built in in the lid 8 and mouths in a working bag 11 which is fastened e.g. to a sleeve 12 of the pressure valve 10 and which is partly inserted into the inner area 13 of the elastic storage bag 7. The working bag 11 is intended to be filled with a compressible, preferably incombustible gas, e.g. nitrogen or air with possible addition of fire-extinguishing agent, e.g. a powder.

Besides the pressure valve 10 another charge and discharge valve 14 for fire-extinguishing agent is arranged in the lid 8. The valve 14 mouths in the inner area 13 of the elastic storage bag 7 and is provided with e.g. a spraying discharge nozzle 15 outside of the lid 8. In case the elastic storage bag is intended to be filled with a agent behaving aggressive to the material of the elastic storage bag 7, the elastic storage bag 7 may be provided with a separating foil (not shown) at its inner surface. The casing of the protective flask 1 may be provided with at least one outlet 16 with a thermal fuse 17 made as a protective cover of

a tip 18 protruding against the wall of the elastic storage bag 7 and created e.g. by curving the material of the cover of the protective flask 1 in the proximity of the outlet 16. In case the cover of the protective flask 1 is made of plastic material, the tip may be formed of a metal and may be fixed to the cover of the protective flask 1 in the proximity of the outlet 16. The thermal fuse 17 is made of a material meltable or combustible by fire, e.g. of a wax or plastic material with a low fusing or burning temperature.

When assembling the pressure container the elastic storage bag 7 is inserted into the protective flask till the bead 6 of said elastic storage bag 7 fits into the circular bed 5. Then the lid 8 with the working bag 11 at its pressure valve 10 is set on the neck 4 and the is secured e.g. by screwing on, whereby the bead 6 of the storage bag 7 is tightly clamped.

The filling of the assembled pressure container, e.g. with a fire-extinguishing agent, is performed through the charge and discharge valve 14 into the inner area 13 of the elastic storage bag 7, the cover of which extends and almost fills the inner space of the protective flask 1 from which the air leaks through the deaerating vent 3. Thereafter, or, alternatively, before it is set ready, the pressure gas, preferably nitrogen, is forced from a pressure medium supply through pressure valve 10 into the working bag 11. Hereby the elastic storage bag 7 is pressed against the inner wall and against the bottom 2 of the protective flask 1 and at

the same time against the thermal fuse 17 of the outlet 16.

It is possible to use the described pressure container in two ways. One way is putting of the spraying discharge nozzle 15 on the charge and discharge valve 14. In this case it is possible to spray the fire-extinguishing agent from the elastic storage bag 7 by turning on the charge and discharge valve 14, whereby the fire-extinguishing agent is pressed by both the force accumulated in the material of the elastic storage bag 7 and by the pressure, e.g. of the nitrogen, in the working bag 11, which secures constant and complete discharge of the fire-extinguishing agent.

The other way of using of the pressure container is that it is thrown into a fire, wherein, after melting or combustion of the thermal fuse 17 the bared tip 18 punctures the elastic storage bag 7 and the fire-extinguishing agent begins to stream out of it through the outlet 16 into the fire and extinguishes the fire. This action may be performed also when the pressure container is arranged in a place where a fire may occur and when the fire breaks out, e.g. in the motor area of a vehicle.

INDUSTRIAL APPLICABILITY

The pressure container may be used for various agents, such as liquid soap, tooth paste, ketchup, mustard etc., but especially for fire-extinguishing agents, which turn the pressure container in a fire-extinguisher.

CLAIMS

1. A pressure container, especially for fire-extinguishing agent, comprising a protective flask made e.g. of aluminium or plastic material and provided with a deaerating vent and in the upper part with a neck having an upwards opened circular bed formed at its inner periphery, there being a lid with a pressure valve removably fixed on the neck, the container being characterized in thac between said circular bed (5) and said lid (8) a bead (6) of an elastic storage bag (7) is clamped, said bead (6) being partly inserted into the inner area of the protective flask (1), while to said pressure valve (10) a working bag (11) is fastened, said working bag (11) being partly inserted into the inner area (13) of the elastic storage bag (7), into which a charge and discharge valve (14), built in in the lid (8) and provided outside thereof with a spraying discharge nozzle (15).

2. A pressure container as claimed in Claim 1, characterized in that opposite to the outside wall of the elastic storage bag (7) the casing of the protective flask (1) is provided with at least one outlet (16) with a tip (18) covered by a thermal fuse (17).

3. A pressure container as claimed in Claim 2, characterized in that the thermal fuse (17) is made of a fire meltable or combustible material.

FIG. 1

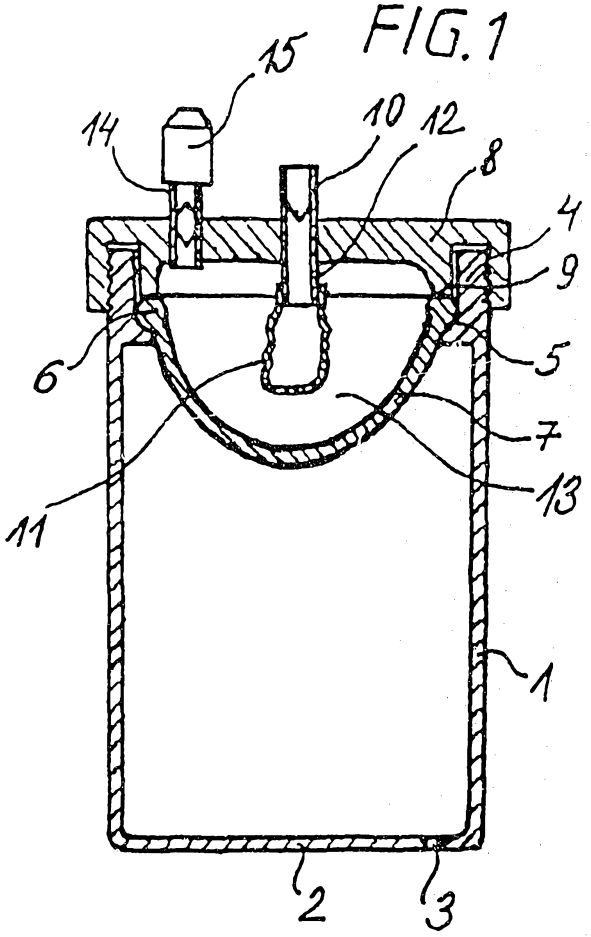

FIG. 3

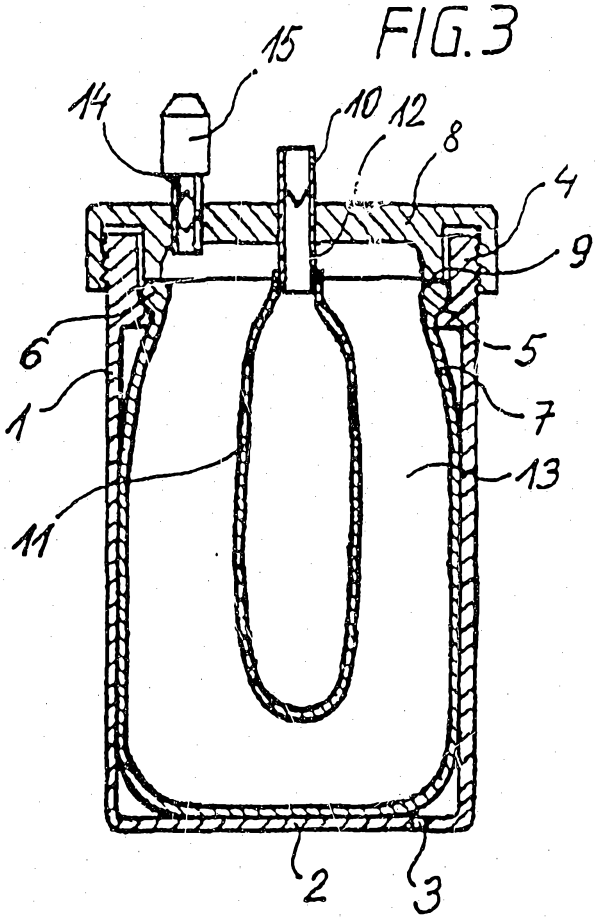

FIG. 2

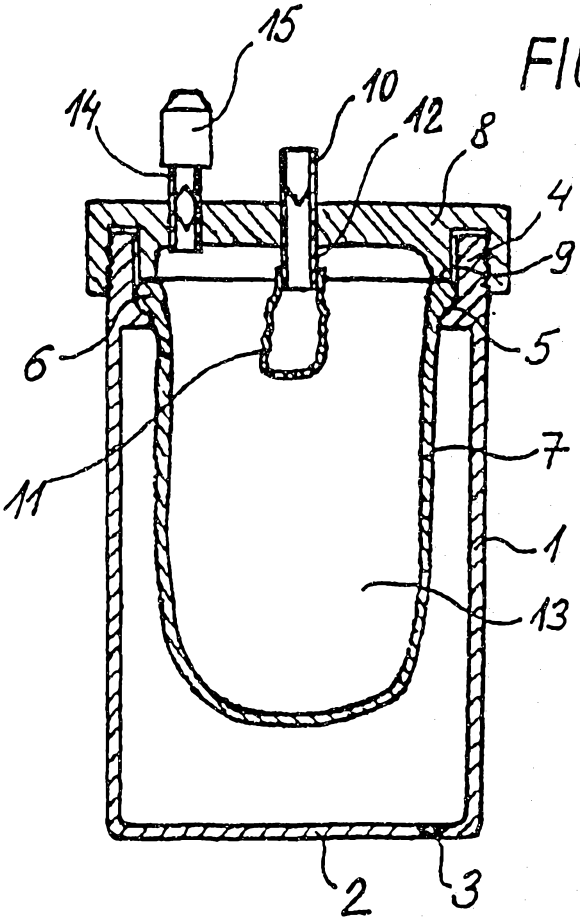

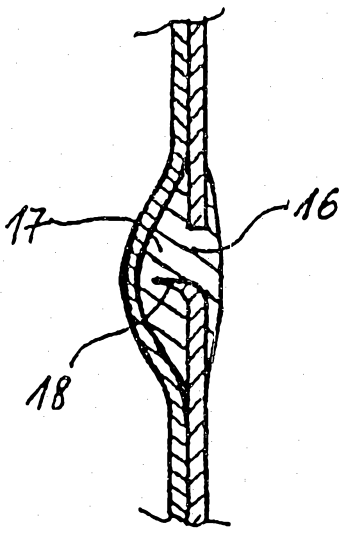

FIG. 4

INTERNATIONAL SEARCH REPORT

International Application No
PCT/CZ 94/00013

A. CLASSIFICATION OF SUBJECT MATTER

A 62 C 13/66, A 62 C 3/07, B 05 B 9/04

According to International Patent Classification (IPC) or to both national classification and IPC 5

B. FIELDS SEARCHED

Minimum documentation searched (classification system followed by classification symbols)

A 62 C 13/66, 13/00, 3/07, 35/00, B 05 B 9/04

Documentation searched other than minimum documentation to the extent that such documents are included in the fields searched

Electronic data base consulted during the international search (name of data base and, where practical, search terms used)

C. DOCUMENTS CONSIDERED TO BE RELEVANT

Category *	Citation of document, with indication, where appropriate, of the relevant passages	Relevant to claim No.
A	WO, A1, 89/09 082 (Mc CULLOCH) 05 October 1989 (05.10.89), claims 1,5,6; fig. --	1
A	GB, A, 1 550 531 (HAHN METALLBAU GMBH.) 15 August 1979 (15.08.79), the whole document. --	1
A	DE, A1, 4 009 705 (PITSCHKE) 02 October 1991 (02.10.91), claims, figs. --	1
A	EP, A2, 0 503 652 (MAISCHBERGER) 16 September 1992 (16.09.92), abstract.	1

[X] Further documents are listed in the continuation of box C.

[ ] Patent family members are listed in annex.

* Special categories of cited documents :

"A" document defining the general state of the art which is not considered to be of particular relevance

"E" earlier document but published on or after the international filing date

"L" document which may throw doubts on priority claim(s) or which is cited to establish the publication date of another citation or other special reason (as specified)

"O" document referring to an oral disclosure, use, exhibition or other means

"P" document published prior to the international filing date but later than the priority date claimed

"T" later document published after the international filing date or priority date and not in conflict with the application but cited to understand the principle or theory underlying the invention

"X" document of particular relevance; the claimed invention cannot be considered novel or cannot be considered to involve an inventive step when the document is taken alone

"Y" document of particular relevance; the claimed invention cannot be considered to involve an inventive step when the document is combined with one or more other such documents, such combination being obvious to a person skilled in the art.

"&" document member of the same patent family

Date of the actual completion of the international search	Date of mailing of the international search report
06 September 1994	22. 09. 94

Name and mailing address of the ISA	Authorized officer
European Patent Office, P.B. 5818 Patentlaan 2 NL - 2280 HV Rijswijk Tel. (+31-70) 340-2040, Tx. 31 651 epo nl, Fax (+31-70) 340-3016	SCHMIDT e.h.

Form PCT ISA/210 (second sheet) (July 1992)

INTERNATIONAL SEARCH REPORT

Interna l Application No
PCT/CZ 94/00013

C.(Continuation) DOCUMENTS CONSIDERED TO BE RELEVANT

Category *	Citation of document, with indication, where appropriate, of the relevant passages	Relevant to claim No.
A	US, A, 3 844 355 (KREIPE) 29 October 1974 (29.10.74),	

ANHANG

zum internationalen Recherchenbericht über die internationale Patentanmeldung Nr.

ANNEX

to the International Search Report to the International Patent Application No.

ANNEXE

au rapport de recherche international relatif á la demande de brevet international n°

PCT/CZ 94/00013 SAE 91751

In diesem Anhang sind die Mitglieder der Patentfamilien der im obengenannten internationalen Recherchenbericht angeführten Patentdokumente angegeben. Diese Angaben dienen nur zur Unterrichtung und erfolgen ohne Gewähr.

This Annex lists the patent family members relating to the patent documents cited in the above-mentioned international search report. The Office is in no way liable for these particulars which are given merely for the purpose of information.

La présente annexe indique les membres de la famille de brevets relatifs aux documents de brevets cités dans le rapport de recherche international visée ci-dessus. Les reseignements fournis sont donnés á titre indicatif et n'engagent pas la responsibilité de l'Office.

Im Recherchenbericht angeführtes Patentdokument Patent document cited in search report Document de brevet cité dans le rapport de recherche	Datum der Veröffentlichung Publication date Date de publication	Mitglied(er) der Patentfamilie Patent family member(s) Membre(s) de la famille de brevets	Datum der Veröffentlichung Publication date Date de publication
WO A1 8909082	05-10-89	AU A1 33532/89	16-10-89
GB A 1550531	15-08-79	BR A 7702966	23-05-78
		DE U1 7614651	23-09-76
		FR A1 2350116	02-12-77
		IT A 1077925	04-05-85
		SE A 7705319	09-11-77
		DE A1 2659112	06-07-78
DE A1 4009705	02-10-91	DE C2 4009705	21-10-93
EP A2 503652	16-09-92	DE U1 9103125	16-04-92
		EP A3 503652	02-12-92
		EP B1 503652	07-09-94
US A 3844355	29-10-74	DE U 7222066	07-09-72
		FR A5 2188754	18-01-74
		GB A 1422843	28-01-76
		IT A 982836	21-10-74