Feb. 15, 1944. H. S. JONES 2,341,788

MANIFOLD SET

Original Filed Jan. 30, 1939

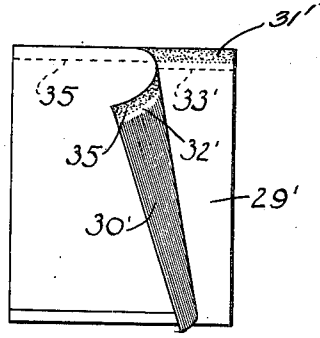

Inventor
HARRY SLOPER JONES
by Charles Hill Attys.

Patented Feb. 15, 1944

2,341,788

UNITED STATES PATENT OFFICE

2,341,788

MANIFOLD SET

Harry Sloper Jones, Chicago, Ill.

Original application January 30, 1939, Serial No. 253,514. Divided and this application July 14, 1941, Serial No. 402,263

1 Claim. (Cl. 282—22)

This invention relates to manifold sets, and more particularly to a novel arrangement of sheets and means for securing the same together.

It has been found economical, in many cases where forms are to be filled out in duplicate or triplicate, etc., to assemble the forms to be so filled out with the necessary carbon paper interleaved between them, the assemblies thus formed being termed "manifold sets," and to provide a supply of said manifold sets to the person who is to use them. This practice has proven to be most economical when the time of the person filling out the forms is particularly valuable or when an expensive accounting machine or the like is used in connection with the operation.

The present invention is a division of my copending application entitled "Manifold sets assembling apparatus and method" U. S. Serial No. 253,514, filed January 30, 1939, issued September 16, 1941, as United States Letters Patent No. 2,255,777. My aforesaid application describes and claims a novel method and machine for assembling manifold sets from ream-cut paper or the like which has already been printed and ruled and from carbon paper, supplied preferably in a continuous web from a roll. The present invention includes a novel carbon and copy sheet unit which may be assembled on a machine of the type described in my aforesaid application.

It is an object of the present invention to provide a novel manifold set.

A further object of this invention is to provide a novel "snap-out form" type of manifold set in which the forms can be separated from the carbons at one snap of the hand.

Another and still further object of the present invention is to provide a novel carbon and copy sheet unit which is formed in a novel manner.

The novel features which I believe to be characteristic of my invention are set forth with particularity in the appended claim. My invention itself, however, both as to its organization, manner of construction, and method of forming the same, together with further objects and advantages thereof, may best be understood by reference to the following description, taken in connection with the accompanying drawing, in which:

The figure is a plan view of one embodiment of the present invention.

The carbon copy sheet unit in the figure comprises a single writing sheet 29' and a single carbon sheet 30' secured together by a line of adhesive 31' along their upper edges. The carbon sheet 30' is made from the form of carbon paper known as "strip carbon" which has an uncoated strip 32' to which adhesive may attach itself. The writing sheet 29' is provided with a roll of perforations 33' spaced from the adhesive 31'. The writing sheet 29' is a little longer than the carbon sheet 30'. The carbon sheet 30' is provided with a line of perforation 35 immediately below the line of adhesive 31'. Since the carbon sheet 30' does not extend down as far as the writing sheet 29', this allows the two sheets to be gripped between the two lines of perforations 33' and 35 so that the main part of the carbon sheet 35 will be held while the writing sheet 29' is not held. Then the end of the writing sheet 29' which projects beyond the end of the carbon sheet 30' can be readily grasped and the writing sheet torn off along the line of perforation 33'. The carbon sheet 30' can then be torn off along the line of perforation 35 and be used in the ordinary manner.

While I have shown a particular embodiment of my invention, it will, of course, be understood that I do not wish to be limited thereto, since many modifications may be made and I, therefore, contemplate by the appended claim to cover all such modifications as fall within the true spirit and scope of my invention.

I claim as my invention:

A unitary transfer and copy sheet unit comprising a single sheet of copy paper and a single sheet of transfer paper disposed thereover, said sheets having flat marginal portions secured together by a strip of adhesive, each of said sheets having a weakened line of severance defining said marginal portions, said weakened line of severance on said transfer sheet being immediately adjacent said strip of adhesive and said weakened line of severance on said copy sheet being spaced from said strip of adhesive.

HARRY SLOPER JONES.