April 18, 1967 K. A. SMITH ET AL 3,314,473

CRYSTAL GROWTH CONTROL IN HEAT EXCHANGERS

Filed July 16, 1965

FIG. 1.

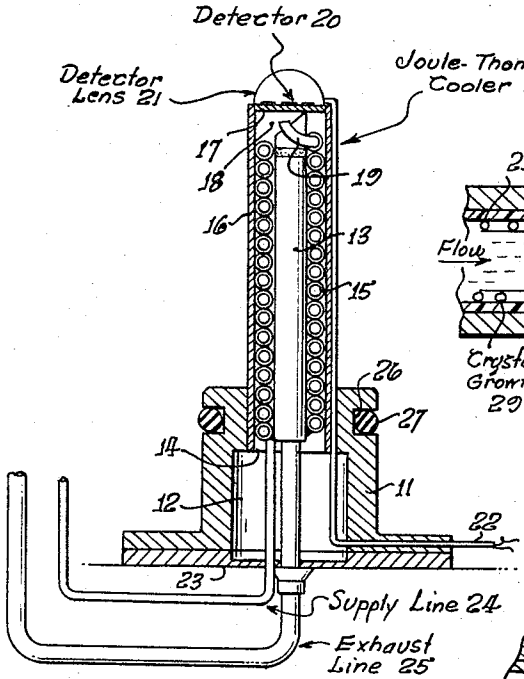

FIG. 2.

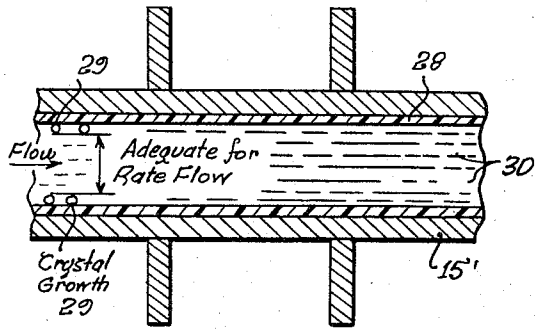

FIG. 3.

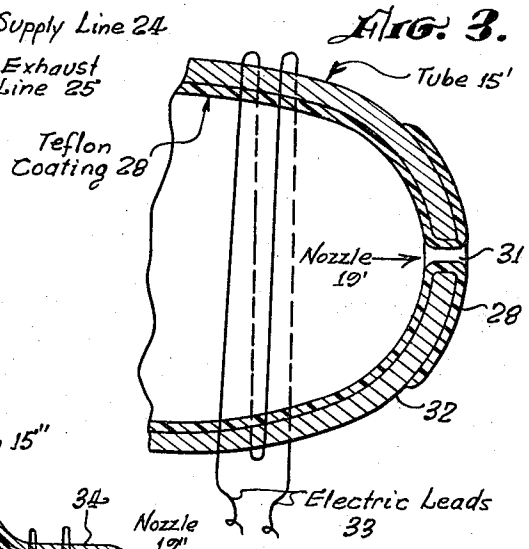

FIG. 4.

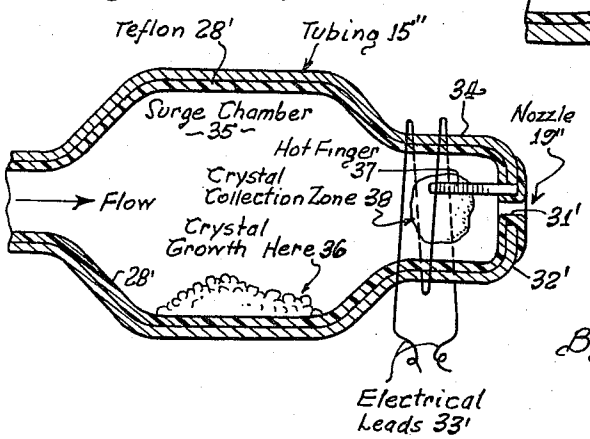

INVENTORS.
KEITH A. SMITH,
DONALD E. WILSON,

By

ATTORNEY.

United States Patent Office 3,314,473 Patented Apr. 18, 1967

3,314,473

CRYSTAL GROWTH CONTROL IN HEAT EXCHANGERS

Keith A. Smith, Diamond Bar, and Donald E. Wilson, Pomona, Calif., assignors to General Dynamics Corporation, Pomona, Calif., a corporation of Delaware

Filed July 16, 1965, Ser. No. 472,476
15 Claims. (Cl. 165—30)

This invention relates to refrigeration devices, particularly to refrigeration devices utilizing the Joule-Thomson effect, and more particularly to means for controlling crystal growth in such refrigeration devices and thereby preventing crystal-induced flow reduction or stoppage therein.

Much effort has been directed to the development of refrigeration devices utilizing the Joule-Thomson effect. With the advent of missiles and space vehicles, the need for effective refrigeration devices or heat exchangers has greatly increased, particularly for miniaturized heat exchanges that can function effectively while being of reduced physical size and weight.

As is well known, many of the present day missiles and space vehicles, as well as land based equipment, utilize energy-detecting units such as those used for detecting infrared or heat radiation.

Infrared detectors, for example, are being used for a variety of purposes especially by the military forces, and to provide a detector of requisite sensitivity, namely, one having optimum spectral response and capable of detecting small temperature differences, requires that the detector cell be maintained at cryogenic temperatures. One common method of accomplishing this low temperature is by expanding a pressurized refrigerant in the vicinity of the cell and returning the cool expanded refrigerant in regenerative heat exchange with the incoming refrigerant to cool the refrigerant before or during expansion and thereby to attain a greater Joule-Thomson effect.

Low temperature regulators of this type, often referred to as cryostats, have the advantage of being free of moving parts which are susceptible to low temperature malfunctioning, in addition to being of extreme structural compactness. While cryostats operating on the expansion or Joule-Thomson cooling principle exist in a multitude of forms, they typically comprise a tightly wound coil of high-heat-conductivity tubing housed in an insulating sheath and adapted to transport gaseous media under high pressure to an expansion orifice or throttling valve, through which the gas is expanded to approximately atmospheric pressure. The Joule-Thomson cooling resulting from expansion causes a lowering of temperature, and the cooled expanded gas is constrained to pass back over the incoming passages of the cryostat or heat exchanger, to cool the incoming high-pressure stream. The temperature at the valve is progressively lowered until gas liquification temperatures are reached.

Despite the advantages inherent in heat exchangers or cryostats of this type, they have found only limited acceptance because of their tendency toward erratic and unreliable operation due primarily to "clogging" of the tube conduit or orifice. These deficiencies can be overcome by using highly purified gas but this approach, when available, is probihitive from a cost standpoint. While the underlying cause for the clogging effect of heat exchangers of this type has not thus far been determined, it is believed to stem from gases conventionally employed in gas-liquifying processes which contain trace amounts of contaminants. Nitrogen, the gas often used, is normally obtained by the fractionation of liquid air and generally contains trace amounts of water vapor, carbon dioxide and varying quantities of the rare gases. As regenerative cooling occurs, these contaminants or impurities are believed to freeze out, obstructing the flow of gas through the tube.

While the emission orifice is generally smaller than the I.D. of the tube it has been observed that flow obstruction is generally caused by clogging of the tube conduit.

This invention provides means for preventing flow stoppage in refrigerative devices, particularly in Joule-Thomson heat exchangers or cryostats, by controlling the clogging or crystal growth due to the contaminants or impurities of the refrigerant that freeze.

Therefore, it is an object of this invention to provide a refrigeration device which overcomes the limitations of the prior known devices of this type.

A further object of the invention is to provide a counterflow heat exchanger or cryostat operating on the Joule-Thomson cooling principle that prevents crystal growth induced flow stoppage therein.

Another object of the invention is to provide a heat exchanger that obviates the necessity of using gases of unusually high purity, thus providing a less expensive cryogenic cooling system.

Another object of the invention is to provide means for controlling crystal growth in refrigeration devices due to impurities of the refrigerant.

These and other objects within contemplation will be readily apparent by reference to the accompanying detailed description and drawings wherein:

FIG. 1 is a view, partially in cross-section, of a typical Joule-Thomson heat exchanger capable of utilizing the invention;

FIG. 2 is an enlarged cross-sectional view of a section of finned tubing constructed in accordance with the invention;

FIG. 3 is an enlarged cross-sectional view of an embodiment of heat exchanger expansion nozzle constructed in accordance with the invention; and

FIG. 4 is an enlarged cross-sectional view of another embodiment of a heat exchanger expansion nozzle constructed in accordance with the invention.

Broadly, the invention relates to improvements in refrigeration devices, particularly in heat exchangers operating on the Joule-Thomson principle. More specifically in order to control crystal growth in the capillary tube, an electrical heater is provided at the nozzle end of the capillary; a Teflon coating is provided throughout the interior surface of the capillary; or a surge capacity for the crystals is provided by enlarging the capillary adjacent the nozzle area. Also, a "hot finger" may be positioned inside the nozzle area or other desired location for defrosting crystals accumulated in this area.

As pointed out above, the problem of freeze-up (crystal growth) in heat exchangers, particularly those utilizing small capillary tubes, is one that has been the source of considerable trouble in the cryogenic and refrigeration industry. This invention provides means for controlling this undesirable crystal growth and thus substantially eliminates the inherent reducing or stopping of the refrigerant flow.

Crystal growth is a phenomena based on the fundamental nature of nucleation and phase change which is not entirely clear. One of the principal hypotheses of liquid structure holds that the instantaneous atomic arrangement in a liquid is such that the immediate environment of any atom is quite like that in the crystalline phase of the same substance. Opposed to this view is the concept that the atomic arrangement in a liquid is more like that in a very dense gas, that is to say that it is as random as can be, within certain constraints. The latter viewpoint is considered to be a better description of the phenomena in the case of water.

Because of the fluid turbulence in a minature Joule-Thomson heat exchanger, for example, it is probable that nucleation occurs without supercooling. But it may likely be, in this case, that the water exists as a vapor,

and crystal growth (ice) is in the form of vapor/crystal rather than liquid/crystal. This would result in the formation of hoar frost or snow type ice (less dense and hence greater tendency toward flow stoppage) rather than conventional ice (compact and more dense).

Some postulated types of crystal growth are as follows:

(1) *Water crystals.*—The water contained in the Freons may logically be considered as contributing to freeze up. Water is considered both because it is difficult to completely remove from Freons and because the temperature encountered in a Joule-Thomson heat exchanger is well below water's freezing point. The crystal structure of ice has been shown to be similar to wurtzite which is a very open structure, thereby accounting for its low density.

(2) *Hydrogen bonding of water and Freon.*—Under certain conditions, an atom of hydrogen is attracted by rather strong forces to two atoms instead of only one so that it may be considered to act as a bond between them. This is called hydrogen bonding and may act as a mechanism for bonding together of Freon molecules and water. It is know that the more electronegative atoms form hydrogen bonds and that the bond strength increases with an increase in electronegativity. Since fluorine is strongly electronegative it seems reasonable to postulate that hydrogen bonding could play a part in crystal growth.

(3) *Hydrate formation.*—Another possible mechanism of crystal growth is that the hydrate formation. Hydrates are normally classed as inclusion compounds in which two or more compounds are associated without ordinary chemical union through partial or complete enclosure of one compound by another. Several weak interaction forces, such as Van der Waals' forces, London dispersion forces, or induced electrostatic attractions are believed to be the responsible mechanism for hydrate formation. These forces can cause the following types of hydrate formation:

(a) Channel hydrates: These are formed by entrapment of the including material in tubes, pores or canals formed by the including agent.

(b) Layer or sandwich hydrates: These are hydrates found in conjunction with other hydrated materials in which the included organic material replaces the loosely bound water in the hydrated material. This type is not believed to be as probable a cause of crystal growth as are clathrate hydrates.

(c) Clathrate hydrates: This type of hydrate, formed by entrapping water molecules within the lattice structure of the Freon, is considered to be the most likely hydrate type to be formed with Freons and water.

The following description of the invention is set forth with respect to a miniature Joule-Thomson heat exchanger (MJTH) for purposes of expansion only and is not limited to this specific application or to heat exchangers per se since the invention is directed to any expansion type refrigeration device.

It is thus believed that MJTH flow problems such as reduced flow rate and intermittent flow stoppage are usually induced by crystal growth that occurs during the flow process. Therefore, the relationship between the crystal growth phenomena and the heat exchanger structure becomes important and this invention provides the necessary structure for preventing flow stoppage or interruption in a miniature Joule-Thomson heat exchanger, for example, which controls crystal growth (components and/or impurities of the refrigerant that freeze).

The following is an outline of the crystal growth phenomena related to preventing flow stoppage in a MJTH.

(1) Eliminating crystal growth by maintenance of the temperature above the equilibrium crystallization temperature.

(2) Maintenance above the specific critical under cooling temperature that prevails for the existing operating conditions.

(3) Provision in the fluid and/or the MJTH for control of the crystal growth by:

(a) Elimination or minimization of tubing motes at the tubing/fluid interface.

(b) Inclusion of proper fluid mote design.

(c) Minimization of the time the fluid is subjected to "sticking" conditions at the wall or nozzle.

(d) Provision of surge capacity for accumulated crystals, and

(e) Elimination of newly formed crystals by heating.

A miniature Joule-Thomson heat exchanger (MJTH) generally consists of a nozzled tube or capillary tube which is used for two purposes: (1) to provide the pressure drop required for a Joule-Thomson expansion (μ), and (2) to improve the value of μ by cooling the incoming fluid. The nozzled tube type of a MJTH is illustrated to describe the present invention. However, the invention may be effectively applied to the unnozzled type of MJTH.

Eliminating crystal growth by maintaining the temperature above the equilibrium crystallization temperature (ECT), as pointed out above, is accomplished in this invention by providing an electric resistance heater at the nozzle of an MJTH, as illustrated in the drawings and described in detail hereinbelow, to assure that the operating temperature is about the ECT. Thus a positive "fix" is applied to cope with the initial plunge of temperature that occurs at the nozzle/fluid interface on startup.

For situations where crystal growth can not be prevented, the design or the selection of the MJTH and/or the refrigerant, as set forth above, must make provision for control of the crystal growth as follows:

(1) Eliminate or minimize tubing motes at the tubing/fluid interface: In order to prevent crystal growth from thereby reducing or stopping flow, it is desirable to avoid crystal growth at these surfaces. Certain regions of the tubing (container walls) may act as motes and thus initiate heterogeneous nucleation. This invention provides a Teflon coated tubing and nozzle for the MJTH as illustrated in the drawings thus substantially eliminating this cause. The Teflon material is not prone to the "sticking" that is associated with crystal growth at the surface, the term "sticking" being defined below.

(2) Provide proper fluid mote design: It is virtually impossible to completely eliminate fluid motes. In fact a plentiful supply of motes are desirable provided that they are sufficiently small enough such that when mote induced nucleation occurs, the resulting size will have easy passage through the tube and nozzle. These small motes may have two important advantages, (1) the motes will help to prevent surface crystal growth as explained above by causing nucleation to occur at the fluid motes rather than at the wall motes, and (2) by providing a sufficiently large number of fluid motes it may be possible to divide the freezable material in the refrigerant into so many small crystals that they may all pass easily through the tube and nozzle. This invention, however, is not directed to fluid mote design.

(3) Minimize the time the fluid is subject to "sticking" conditions at the wall or nozzle: The concept of crystal growth on the tubing or nozzle surfaces (sticking) may be explained by consideration of the basic nucleation process. Crystal growth may occur when the specific critical under cooling temperature (SCUT) is less than the operating temperature (T) and T is less than the equilibrium crystallization temperature (ECT) or $SCUT \gtrless T \gtrless ECT$. Nucleation absolutely may not occur at other temperatures. In this case, the MJTH must be cooled to or through the *SCUT/ECT* region. As a corollary to this requirement, the fluid must also meet the conditions of $SCUT \gtrless T \gtrless ECT$. The corollary condition applies because there is not a temperature discon-

tinuity at the wall/fluid interface. The mechanism then, is one in which the wall is colder than the fluid and therefore results in crystal growth to the wall. Considering a section of the MJTH tubing and its temperature-time cooldown history and assuming the wall note elimination method described above is not entirely successful, the MJTH design must provide for some crystal growth at the tube wall. In accordance with this invention, this wall crystal growth is controlled in two ways, (1) the time of exposure to the condition of $SCUT \gtrless T \gtrless ECT$ is minimized, and (2) the tubing is sized to provide storage capacity for the crystal growth that does occur at the wall.

(4) Provide surge capacity for accumulated crystals: There is a zone of transition in a MJTH for which the condition of $SCUT \gtrless T \gtrless ECT$ can not be avoided. Once again, assuming the wall mote elimination method is not entirely successful, the solution to the problem is to provide sufficient crystal growth surge capacity to allow the required operation cycle deviation, as illustrated in the drawings. There is an entirely analagous situation to this at the warm end of the MJTH and an equivalent solution (provision for surge capacity) could therefore be used at the warm end.

(5) Eliminate newly formed crystals by heating: It is recognized that conditions may exist such that the above concepts will not be entirely successful. The MJTH wall and nozzle illustrated in the drawings function to eliminate or reduce flow stoppage by the application of a heating means. This additional concept consists of preventing the collection of these crystals by using a "hot finger." The "hot finger" does not result in an additional temperature region where $SCUT \gtrless T \gtrless ECT$.

Referring now to the drawings, FIG. 1 illustrates a typical heat exchanger or refrigeration device **10** of the Joule-Thomson type and comprises a housing **11** defining a chamber **12**, a cylindrical mandrel **13** extending through an aperture **14** in housing **11**, coil of finned metal tubing **15** helically wound on mandrel **13**, a jacket **16** positioned around tubing **15** and extending into said housing aperture **11**, jacket **16** having an end portion **17** defining a chamber **18** into which tubing **15** terminates by way of nozzle **19**, for example. A detector cell **20** such as an infrared cell is positioned adjacent jacket end portion **17** with a detector lens **21** covering cell **17**. Electric leads for detector **17** indicated at **22** extend along jacket **16** through housing **11** to a point of use (not shown). Chamber **12** of housing **11** is enclosed by a sealing member **23** through which a supply line **24** and an exhaust line **25** extend. Supply line **24** is connected to tubing **15** at the end adjacent chamber **12** while exhaust line **25** terminates at sealing member **23** so as to provide open communication therebetween. Housing **11** is provided with a groove **26** within which is positioned an O-ring type seal **27**, housing **11** being adapted to be mounted in another housing (not shown).

The FIG. 1 heat exchanger **10** operates in a conventional manner wherein gaseous media under high pressure is transported from a source via supply line **24** through wound tubing **15** to the expansion orifice or throttling nozzle **19** through which the gas is expanded into chamber **18** to approximately atmospheric pressure. The Joule-Thomson cooling resulting from expansion causes a lowering of temperature, and the cooled expanded gas is constrained by jacket **16** to pass back over the incoming tubing **15** to chamber **12** and thus cool the incoming high-pressure stream. The temperature at the nozzle **19** is progressively lowered until, in the case of nitrogen, for example, liquefaction temperatures are reached, the expanded material being exhausted through line **25**. The detector cell **20** is cooled by the cooling of the adjacent end **17** of jacket **16**, as is well known in the art.

A section of the finned tubing **15** is shown enlarged in FIG. 2 and modified in accordance with the present invention by providing the tubing with a thin lining **28** of Teflon. The internal diameter of the tubing **15'** with lining **28** is of an adequate dimension to allow for the rated flow though decreased by some crystal growth, since the flow **30** is reduced by crystal growth indicated at **29** sticking to lining **28** of tubing **15'**.

The nozzle **19'** illustrated in FIG. 3 incorporates a Teflon lining or coating **28** which extends from the interior of tubing **15'** through a nozzle orifice **31** and terminates on the external surface **32** of the nozzle. Electrical resistance heating leads **33** are coiled around nozzle **19'**, the ends thereof extending, for example, along jacket **16** of FIG. 1 or through the interior of mandrel **13** or by other known methods for connection to an external power source. Thus crystal growth is controlled by the combined effect of the Teflon lining and/or heating of the nozzle area.

The expansion nozzle illustrated in FIG. 4 utilizes those features taught in FIG. 3 while additionally providing a surge chamber and a "hot finger" arrangement. The nozzle generally indicated by **19''** is provided with a Teflon lining or coating **28'** which extends from the interior of tubing **15''** through a nozzle orifice **31'** and terminates on the external surface **32'** of the nozzle. Electrical resistance heating leads **33'** are coiled around end portion **34** of nozzle **19''** and may be connected to a power source in the same manner as described above with respect to FIG. 3. Tubing **15''** is enlarged to define a surge chamber **35** which functions to entrap any crystal growth as indicated at **36**. Extending inwardly from and adjacent to orifice **31'** is a "hot finger" **37** which is attached to the tubing which defines nozzle **19''**. Hot finger **37** functions to reduce or eliminate the crystal collection zone **38**. Thus, by the combination of the lining, surge chamber, electrical heating and the hot finger, crystal growth within the expansion nozzle is substantially eliminated, or reduced to such extent that it does not clog the tubing or expansion nozzle and thus allows for full refrigerant flow and efficient expansion and cooling of the refrigerant.

It has thus been shown that this invention provides means for preventing flow stoppage of a refrigerant in heat exchangers, particularly those of the Joule-Thomson type, by controlling crystal growth (components and/or impurities of the refrigerant that freeze) within the heat exchanger.

Although particular embodiments of the invention have been illustrated and described, modifications and changes will become apparent to those skilled in the art, and it is intended to cover in the appended claims all such modifications and changes as come within the spirit and scope of the invention.

What we claim is:

1. In a refrigeration device utilizing the Joule-Thomson effect, means for controlling crystal growth therein for preventing crystal-induced flow reduction including a thin Teflon layer positioned adjacent the internal wall surface of the refrigeration device at least in the portion where expansion of the refrigerant functions to reduce the temperature thereof.

2. In a refrigeration device utilizing the Joule-Thomson expansion effect for reducing the temperature of refrigerant fluid flowing therethrough, means for controlling crystal growth within the refrigeration device and the inherent flow reduction caused by such growth, said means including a coating of Teflon on the internal surfaces of the device at at least the portion thereof in which the expansion and associated cooling takes place.

3. In the refrigeration device defined in claim **2**, wherein the crystal growth control means additionally includes electrical heating means operatively positioned adjacent the expansion portion of the device.

4. In the refrigeration device defined in claim **2**, wherein the crystal growth control means additionally includes a surge chamber positioned in the device and in the

vicinity upstream of the expansion portion of the device.

5. In the refrigeration device defined in claim 2, wherein the crystal growth control means additionally includes a hot finger mechanism immediately adjacent the expansion portion of the device.

6. In a heat exchanger having a counterflow tubing arrangement and an expansion chamber interposed between the inlet tubing exhaust and the outlet tubing intake, the improvement comprising means for controlling crystal growth within the inlet tubing and the associated flow reduction therein including a lining of Teflon on at least the internal surface of the inlet tubing exhaust portion, a surge chamber positioned immediately upstream from the inlet tubing exhaust, and electrical heating means positioned around said inlet tubing exhaust portion.

7. In the heat exchanger defined in claim 6, wherein the crystal growth control means also includes a hot finger means positioned within the inlet tubing and adjacent the exhaust portion thereof.

8. A heat exchanger having inlet tubing and outlet tubing in heat exchange relationship, an expansion chamber intermediate the terminal end of the inlet tubing and the inlet end of the outlet tubing, nozzle means located in the terminal end of the inlet tubing, and means for controlling flow reduction of refrigerant through said nozzle means, said means including a lining of Teflon on the internal surface of at least a portion of the terminal end of the inlet tubing and through the nozzle means.

9. The heat exchanger defined in claim 8, additionally including electrical heating means positioned adjacent said nozzle means.

10. The heat exchanger defined in claim 8, additionally including a surge chamber defined by the terminal end of the inlet tubing and located immediately upstream from said nozzle means.

11. In combination, an infrared detector and a heat exchanger for cooling said detector, said heat exchanger operating on the Joule-Thomson effect, said heat exchanger being provided with means for controlling crystal growth flow reduction therethrough, said means including a Teflon lining in the terminal portion of the inlet refrigerant tubing of said heat exchanger.

12. The combination defined in claim 11, wherein said crystal growth control means additionally includes electrical heating means positioned adjacent the terminal portion of said inlet refrigerant tubing.

13. The combination defined in claim 12, wherein said crystal growth control means additionally includes a surge chamber defined by the terminal portion of the inlet refrigerant tubing.

14. The combination defined in claim 13, wherein said crystal growth control means additionally includes a hot finger means positioned within the terminal portion of said inlet refrigerant tubing.

15. The combination defined in claim 11, wherein said terminal portion terminates in a nozzle means, said nozzle means being lined with Teflon.

References Cited by the Examiner

UNITED STATES PATENTS

3,064,451	11/1962	Skinner	62—514
3,125,866	3/1964	Mann et al.	62—272
3,158,283	11/1964	Rinfret et al.	165—133
3,207,209	9/1965	Hummel	165—133

MEYER PERLIN, *Primary Examiner.*

C. SUKALO, *Assistant Examiner.*