O. E. BOUCHER.

MEANS FOR FASTENING WINDOW GLASS.

APPLICATION FILED APR. 11, 1911.

1,068,407. Patented July 29, 1913.

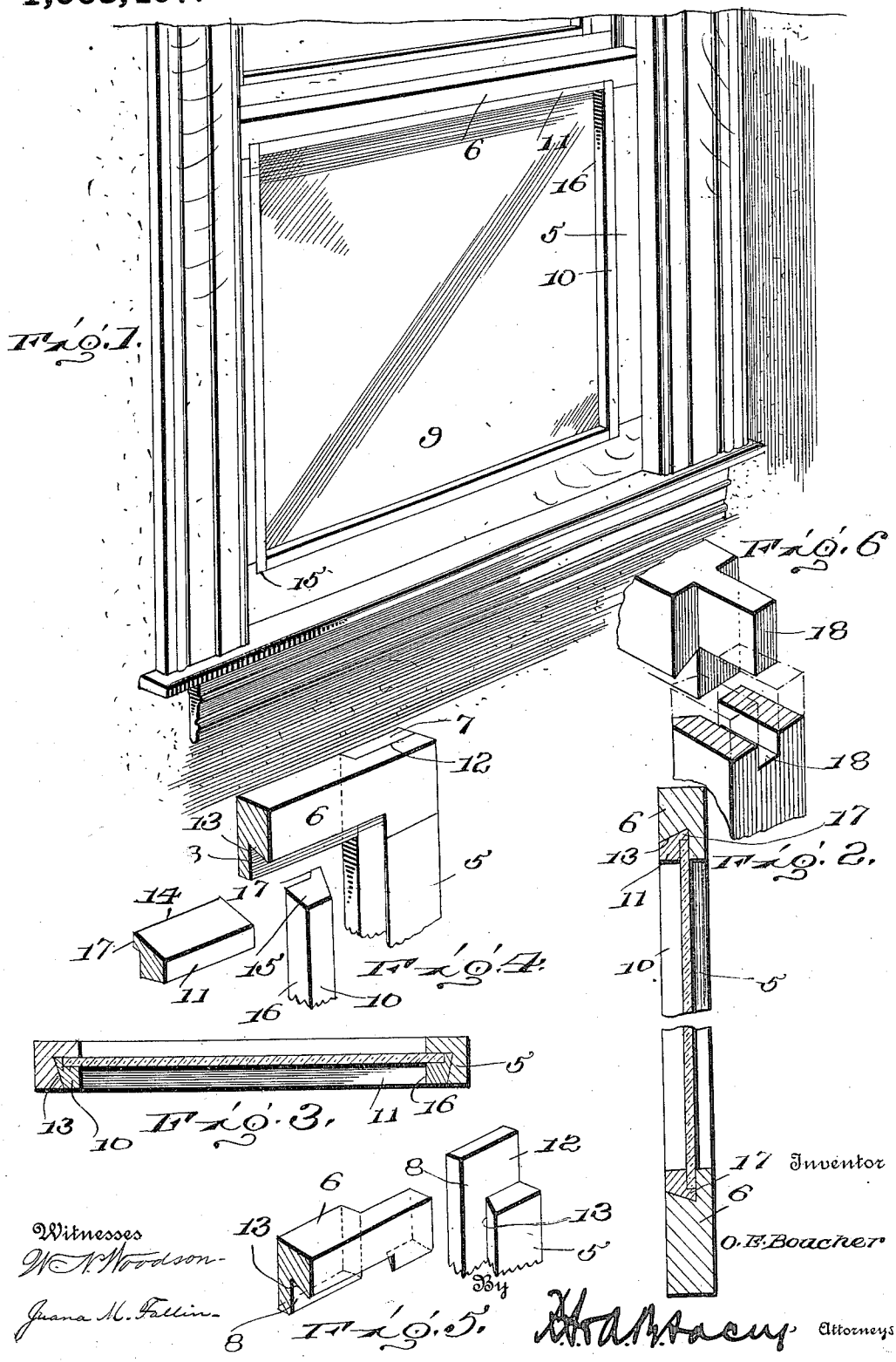

Fig. 1.

Fig. 6

Fig. 2.

Fig. 4.

Fig. 3.

Fig. 5.

COLUMBIA PLANOGRAPH CO., WASHINGTON, D. C.

UNITED STATES PATENT OFFICE.

OLIVER E. BOUCHER, OF WILLIAMSTOWN, VERMONT, ASSIGNOR OF ONE-HALF TO WARREN V. GREARSON, OF WILLIAMSTOWN, VERMONT.

MEANS FOR FASTENING WINDOW-GLASS.

1,068,407. Specification of Letters Patent. Patented July 29, 1913.

Application filed April 11, 1911. Serial No. 620,474.

To all whom it may concern:

Be it known that I, OLIVER E. BOUCHER, citizen of the United States, residing at Williamstown, in the county of Orange and State of Vermont, have invented certain new and useful Improvements in Means for Fastening Window-Glass, of which the following is a specification.

This invention relates to retaining strips and has for its object the provision of a comparatively simple and thoroughly efficient device of this character, by means of which panes of glass may be securely fastened in window sashes, doors and other closures, without the employment of putty, brads, glaziers' points and similar auxiliary fastening devices.

A further object is to provide a supporting frame having one side thereof rabbeted to form a seating recess for a window pane or light, the latter being retained within the recess by longitudinal and transverse strips, the walls of which are inclined or beveled for engagement with the undercut walls of said recess.

A still further object of the invention is generally to improve this class of devices so as to increase their utility, durability and efficiency.

Further objects and advantages will appear in the following description, it being understood that various changes in form, proportions and minor details of construction may be resorted to within the scope of the appended claim.

For a full understanding of the invention and the merits thereof, reference is to be had to the following description and accompanying drawings, in which:

Figure 1 is a perspective view of a window sash provided with retaining strips embodying the present invention; Fig. 2 is a vertical sectional view, showing the transparent panel in position on a window sash; Fig. 3 is a transverse sectional view; Fig. 4 is a detail perspective view of one corner of the sash, showing the construction of the seating recess thereof, portions of the adjacent longitudinal and transverse retaining strips being also shown; Fig. 5 is a perspective view of one corner of the window sash with the adjacent vertical and transverse bars thereof separated to show the construction of the half joint. Fig. 6 is a detail perspective view, showing the retaining strips applied to a window sash having a mortise and tenon joint.

Corresponding and like parts are referred to in the following description and indicated in all the views of the drawings by the same reference characters.

The improved retaining strip forming the subject matter of the present invention is principally designed for holding panes of glass in position on windows and other closures, and by way of illustration is shown in connection with a window sash, in which 5 designates the vertical bars or stiles, and 6 the upper and lower transverse bars connected with the side bars, preferably by a half joint 7.

The inner edges of the vertical and transverse bars are rabbeted to form a marginal seating recess 8 adapted to receive a window light or other transparent panel 9, said panel being retained in position on the frame by vertical and transverse retaining strips 10 and 11. The bottom of the seating recess 8 is preferably disposed flush with and forms a continuation of the flat faces 12 of the half joints 7, while the recessed portions of the side or vertical bars 5 intersect the recessed portions of the transverse bars 6, as shown. The walls of the recess 8, are undercut at 13 for engagement with correspondingly inclined faces 14 formed on the retaining strips, thus to hold said strips in position on the supporting frame without the employment of nails and similar fastening devices. The opposite ends of the side strips 10 are inclined or beveled at 15 for engagement with the undercut walls of the recessed portions of the transverse bars 6, while the opposite ends of the transverse strips 11 are flat for engagement with the adjacent flat edges 16 of said side strips. Thus it will be seen that by inserting the side strips 10 within the recess 8 and subsequently positioning the transverse strips 11 between said side strips and moving said transverse strips within the recessed portions of the adjacent transverse bars 6, all of the strips will be securely held in position and the window pane or panel fastened in the frame without the use of putty, glaziers' points and the like.

The bottom of each retaining strip, at the inclined face 14 thereof, is provided with a depending rib 17, preferably of the same thickness as the glass or panel 9 so that

when the retaining strips are placed in the seating recess 8, the ribs 17 will bear against the bottom of the recess, while the lower faces of the strips will bear flat against the adjacent surface of the panel.

In Fig. 6 of the drawings, the retaining strips are shown applied to a window sash having mortise and tenon joints 18, instead of half joints, the construction and operation of the device being otherwise similar to that shown in Fig. 1 of the drawings.

While the retaining strips are principally designed for holding panes or lights in position on window sashes, it will of course be understood that the same may be used with equally good results for fastening transparent panels in storm doors, transoms, book-cases, or wherever a device of this kind is found desirable or applicable.

The strips, by means of which the window glass is secured in the sash, may be formed of wood which is sufficiently compressible to admit of its being forced into place, the inner portion of the strip being compressed to pass the edge of the glass and later expanding to engage against the undercut face of the glass receiving recess to lock the strip and therefore the glass in place.

Having thus described the invention, what is claimed as new is:

The combination with a supporting frame having a seating recess, one wall of which is inclined rearwardly and outwardly, of a panel resting by its edges in said recess, and compressible resilient retaining strips seated with their rear faces flatly engaging against the rear wall of the recess, the inner edge portions of the rear faces of said strips being grooved to seat the edges of the panel, and the outer faces of said strips being beveled to engage beneath and throughout their extent against the inclined wall of the recess when the edge portions of the panel are seated in the grooves of said strips.

In testimony whereof, I affix my signature in presence of two witnesses.

OLIVER E. BOUCHER. [L. S.]

Witnesses:

LEON M. MCALLISTER,

GLEN F. MCALLISTER.

Copies of this patent may be obtained for five cents each, by addressing the "Commissioner of Patents, Washington, D. C."