Feb. 1, 1955 R. FLUK 2,700,771

COMBINATION PANTY AND SLIP

Filed June 28, 1951 2 Sheets-Sheet 1

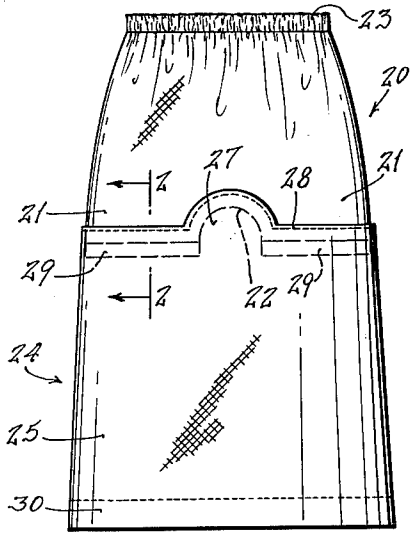

Fig. 1.

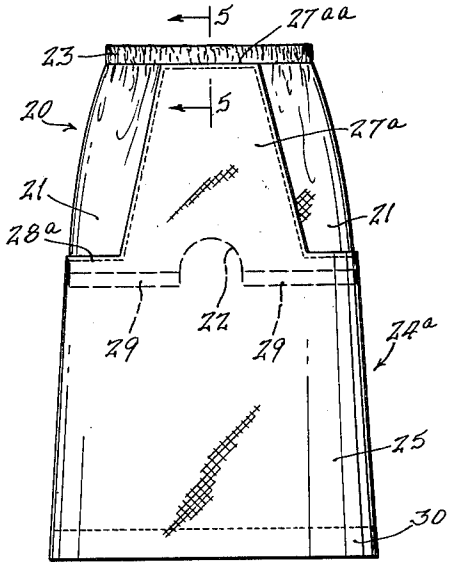

Fig. 4.

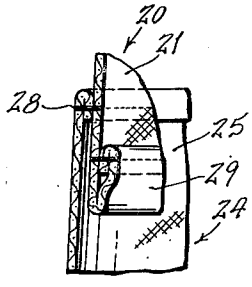

Fig. 2.

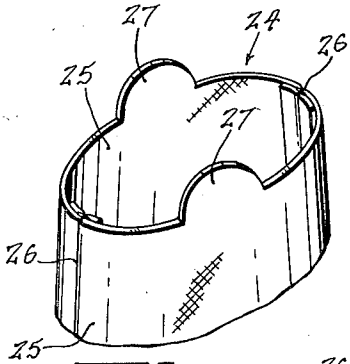

Fig. 3.

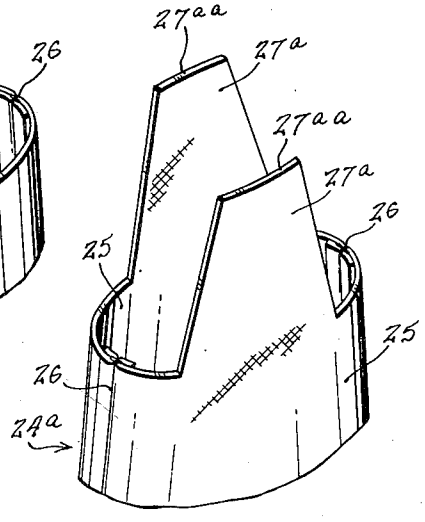

Fig. 6.

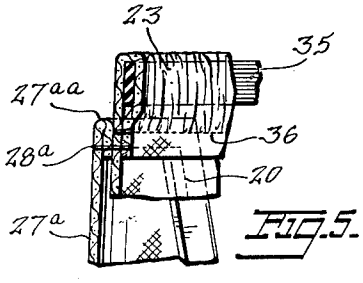

Fig. 5.

INVENTOR.
ROSE FLUK
BY
Zoltan Polachek
ATTORNEY

Feb. 1, 1955 R. FLUK 2,700,771

COMBINATION PANTY AND SLIP

Filed June 28, 1951 2 Sheets-Sheet 2

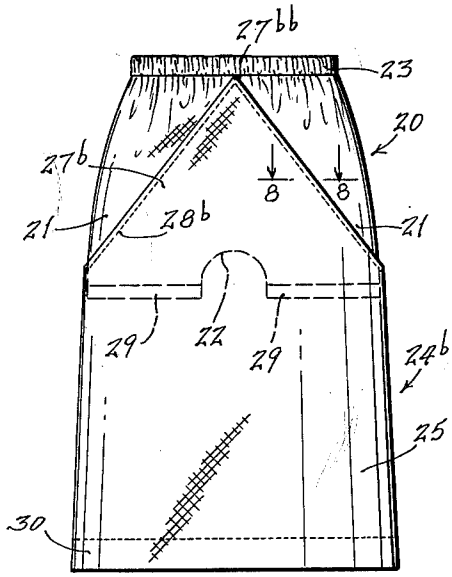

Fig. 7.

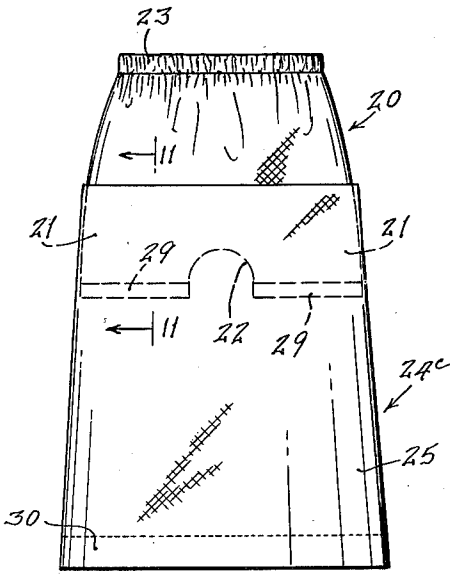

Fig. 10.

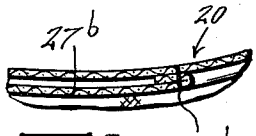

Fig. 8.

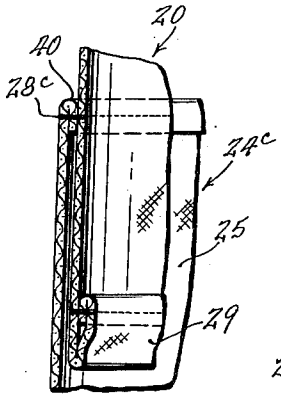

Fig. 11.

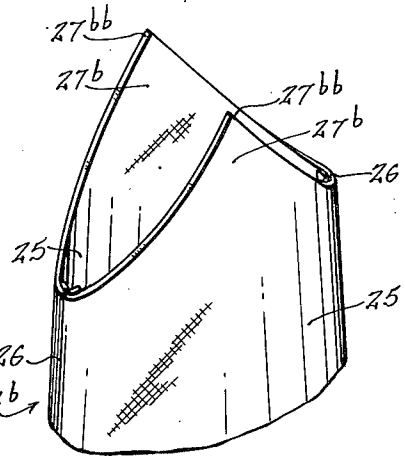

Fig. 9.

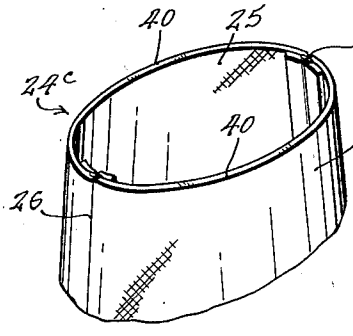

Fig. 12.

INVENTOR.
ROSE FLUK
BY
ATTORNEY

United States Patent Office 2,700,771 Patented Feb. 1, 1955

2,700,771

COMBINATION PANTY AND SLIP

Rose Fluk, Bronx, N. Y.

Application June 28, 1951, Serial No. 234,081

5 Claims. (Cl. 2—212)

This invention relates to new and useful improvements in a combination panty and slip.

In recent years, the so-called "half-slip" has enjoyed considerable popularity with the ladies for wear during the summer months in view of its ability to shadow-proof the upper legs while at the same time relieving the upper part of the body, above the waist, of the bulkiness and added warmth which results from wearing a complete slip. Notwithstanding their popularity, the half-slips have been found objectionable because of the elastic waist members which are used for supporting such slips from the waist resulting in undue bulkiness and unsightly bulges on the outer garments particularly when such half-slips are worn with conventional panties which also have elastic waist members for supporting them from the waist of the wearer.

Attempts have been made to overcome the objections to the conventional separate panty and half-slip by mounting the panty within the half-slip so that both are supported as a unit from a single elastic waist member. However, the present invention proposes a novel arrangement of a panty and a half-slip so that both are supported from the single elastic waist member of the panty while at the same time effecting their interconnection with a considerable saving in the material of the half-slip by the elimination of double layer material over the greater portion of the areas where the panty and the slip are overlapped.

Another object of the present invention proposes constructing the combination panty and slip so that the slip is of a length to have its top portion engaged over and surround the bottom portion of the panty member in a manner to eliminate the need for double layer material over the complete height of the panty while at the same time permitting both the panty and the slip to be supported by the elastic waist member of the panty.

The present invention proposes several different formations at the top portion of the slip for being stitched to the bottom portion of the panty in a manner to form an integral unit of the panty and the slip.

It is a further object of the present invention to form a combination panty and slip which is simple, which is effective for its intended purposes and which can be manufactured and offered for sale at a reasonable cost.

For further comprehension of the invention, and of the objects and advantages thereof, reference will be had to the following description and accompanying drawings, and to the appended claims in which the various novel features of the invention are more particularly set forth.

In the accompanying drawings forming a material part of this disclosure:

Fig. 1 is a front elevational view of a combination panty and slip constructed in accordance with the present invention.

Fig. 2 is an enlarged partial vertical sectional view taken on the line 2—2 of Fig. 1.

Fig. 3 is a perspective view of the top portion of the slip member, per se.

Fig. 4 is a view similar to Fig. 1, but illustrating the combination panty and slip constructed in accordance with another form of the invention.

Fig. 5 is an enlarged partial vertical sectional view taken on the line 5—5 of Fig. 4.

Fig. 6 is a perspective view of the top portion of the slip member used in the form of the invention shown in Figs. 4 and 5.

Fig. 7 is another view similar to Fig. 1, but illustrating

the combination panty and slip constructed in accordance with still another modification of the invention.

Fig. 8 is an enlarged partial horizontal sectional view taken on the line 8—8 of Fig. 7.

Fig. 9 is a perspective view of the top portion of the slip member used in the form of the invention shown in Figs. 7 and 8.

Fig. 10 is still another view similar to Fig. 1, but illustrating the combination panty and slip constructed in accordance with a still further embodiment of the present invention.

Fig. 11 is an enlarged partial horizontal sectional view taken on the line 11—11 of Fig. 10.

Fig. 12 is a perspective view of the top portion of the slip member used in the form of the invention shown in Figs. 10 and 11.

The combination panty and slip, according to the first form of the present invention shown in Figs. 1 to 3, includes a panty member 20 substantially of conventional construction to have a pair of leg portions 21 separated by the usual crotch formation 22. At its top edges, the panty 20 is provided with the usual elastic waist 23 for supporting the panty member 20 about the waist of the wearer.

Depending from the panty member 20 there is a slip member 24. The slip member 24 is of a height to have its top portion engaged about and surround the bottom portion of the panty member 20. The slip member 24 is constructed of separate front and back portions 25 secured together along vertical side seams 26. The front and back portions 25 of the slip member 24 substantially midway of the side seams are formed at their top edges with upstanding projections 27. The projections 27 are semicircular in formation and are shaped to engage the front and rear portions of the panty member 20 above its crotch formation 22, see Fig. 1.

Means are provided for securing the top portion of the slip member 24 to the bottom portion of the panty member 20. The securing means comprises a line of stitches 28 engaged through the material of the slip member 24 and the panty member 20 after the top edge portions of the slip member have been turned downward between the adjacent faces of the panty member and the slip member. From Fig. 1, it is apparent that the line of stitches 28 follow the curvature of the top edges of the projections 27 so that the slip member 24 will hang even without puckering in the vicinity of the crotch formation 22 of the panty member 20.

From Figs. 1 and 2 it is apparent that the bottom of the leg portions 21 of the panty member 20 are finished with a hem 29. Likewise, the bottom edges of the slip member 24 are finished with a hem 30.

It is apparent that a combination garment has been provided which possesses all of the advantages of a separate panty and half-slip, which combination garment is supported from the waist by the single elastic waist 23 of the panty member 20 completely eliminating the need for two separate elastic waists and the objectionable bulkiness resulting from the use of two separate elastic waists. Furthermore, the present construction results in a considerable saving in material and at the same time makes the combination garment somewhat cooler to wear in warm weather by eliminating the double layer material over the greater portion of the panty member 20.

The modification of the invention shown in Figs. 4 to 6 differs from the original form only in the formation of the projections 27^a at the top edges of the front and back portions of the slip member 24^a. The projections 27^a are of truncated triangular shape and have their flat top edges 27^{aa} located at the bottom edge of the elastic waist 23 of the panty member 20.

The stitches 28^a, which secure the slip member 24^a to the panty member 20 follow the top edges of the slip member and the edges of the truncated triangularly shaped projections 27^a.

In Fig. 5, the elastic waist 23 is illustrated as being formed by having the top edge portions of the panty member 20 folded over the top of a continuous elastic band 35. Those folded over edge portions of the panty member 20 are secured in position by a line of stitches 36. The

elastic waists **23** of the combination garments of each of the other forms of the invention are similarly formed.

In other respects, the form of the invention shown in Figs. 4 to 6 is similar to that described in connection with Figs. 1 to 3 and like reference numerals are used to identify like parts.

The modification of the invention shown in Figs. 7 to 9 is characterized by still another shape for the projections **27**^{b} at the top edges of the front and back portions **25** of the slip member **24***b*. In this form of the invention, the projections **27***b* are of triangular formation with the apexes **27**^{bb} of those triangular formations located at the bottom edge of the elastic waist **23** of the panty member **20**.

The stitches **28**^{b}, which secure the slip member **24**^{b} to the panty member **20**, follow the edges of the triangular projections **27**^{b}.

Here again, the form of the invention shown in Figs. 7 to 9 is in all other respects similar to the first form of the invention and like reference numerals are used to identify like parts.

In the modification of the invention shown in Figs. 10 to 12, the slip member **24**^{c} is characterized by the fact that it has straight top edges **40**. The slip member **24**^{c} is of a height to have its top edges **40** encircle the panty member **20** substantially midway between the top and bottom edges thereof and the slip member is secured to the panty member **20** by a single line of stitches **28**^{c}.

The modification of the invention shown in Figs. 10 to 12 is also similar in all other respects to that described in connection with Figs. 1 to 3 and like reference numerals are used to identify like parts.

While I have illustrated and described the preferred embodiments of my invention, it is to be understood that I do not limit myself to the precise constructions herein disclosed and the right is reserved to all changes and modifications coming within the scope of the invention as defined in the appended claims.

Having thus described my invention, what I claim as new, and desire to secure by United States Letters Patent is:

1. A combination panty and slip comprising a panty member, a slip member, said slip member being of a length to have its top portion engage over and surround the bottom portion of said panty member, and means securing the top portion of said slip member to the bottom portion of said panty member, said panty member having a pair of leg portions separated by a crotch formation, said slip member being formed of separate front and back portions joined together along their vertical side edges, and upstanding projections on the top edges of said front and back portions midway of their side edges for extension above the crotch formation of said panty member.

2. A combination panty and slip comprising a panty member, a slip member, said slip member being of a length to have its top portion engage over and surround the bottom portion of said panty member, and stitching securing the top portion of said slip member to the bottom portion of said panty member, said panty member having a pair of leg portions separated by a crotch formation, said slip member being formed of separate front and back portions joined together along their vertical side edges, and upstanding projections on the top edges of said front and back portions midway of their side edges for extension above the crotch formation of said panty member, said projections being semicircular in formation and being stitched to the crotch formation.

3. A combination panty and slip comprising a panty member, a slip member, said slip member being of a length to have its top portion engage over and surround the bottom portion of said panty member, and means securing the top portion of said slip member to the bottom portion of said panty member, said panty member having a pair of leg portions separated by a crotch formation, said slip member being formed of separate front and back portions joined together along their vertical side edges, and upstanding projections on the top edges of said front and back portions midway of their side edges for extension above the crotch formation of said panty member, said panty member having an elastic waist and said projections having their top ends located at the bottom edges of said elastic waist.

4. A combination panty and slip comprising a panty member, a slip member, said slip member being of a length to have its top portion engage over and surround the bottom portion of said panty member, and means securing the top portion of said slip member to the bottom portion of said panty member, said panty member having a pair of leg portions separated by a crotch formation, said slip member being formed of separate front and back portions joined together along their vertical side edges, and upstanding projections on the top edges of said front and back portions midway of their side edges for extension above the crotch formation of said panty member, said panty member having an elastic waist and said projections having their top ends located at the bottom edges of said elastic waist, said projections being of truncated triangular formation.

5. A combination panty and slip comprising a panty member, a slip member, said slip member being of a length to have its top portion engage over and surround the bottom portion of said panty member, and means securing the top portion of said slip member to the bottom portion of said panty member, said panty member having a pair of leg portions separated by a crotch formation, said slip member being formed of separate front and back portions joined together along their vertical side edges, and upstanding projections on the top edges of said front and back portions midway of their side edges for extension above the crotch formation of said panty member, said panty member having an elastic waist and said projections having their top ends located at the bottom edges of said elastic waist, said projections being triangular in formation.

References Cited in the file of this patent

UNITED STATES PATENTS

1,481,657	Vilandrer	Jan. 22, 1924
1,784,369	Lowenbaum	Dec. 9, 1930
2,048,120	Greenbaum	July 21, 1936
2,288,905	Jackson	July 7, 1942

FOREIGN PATENTS

472,129	Great Britain	Sept. 17, 1937