June 5, 1956 S. KELLY 2,749,131

MECHANICAL COUPLING DEVICES

Filed Oct. 2, 1951

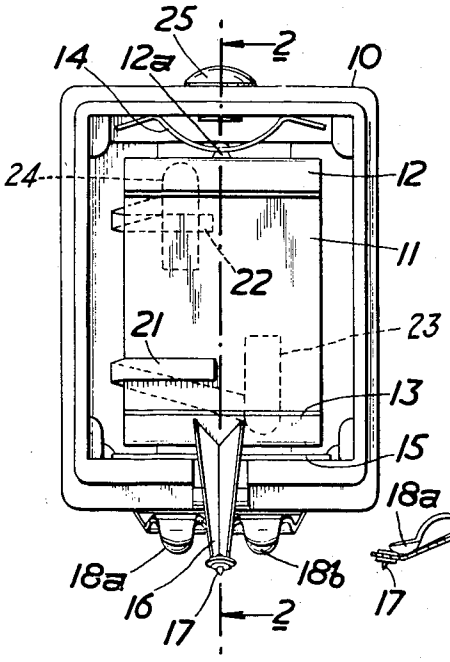

FIG. 1.

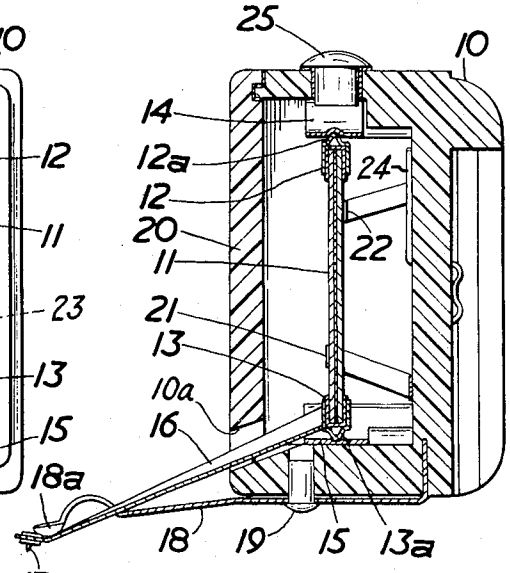

FIG. 2.

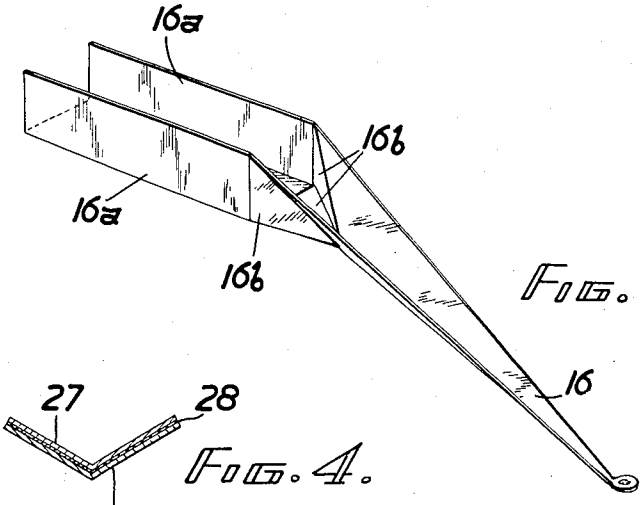

FIG. 3.

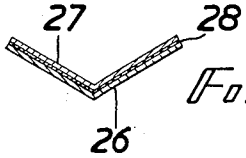

FIG. 4.

Inventor:
Stanley Kelly,
By Pierce, Scheffler & Parker,
Attorneys.

United States Patent Office

2,749,131

Patented June 5, 1956

1

2,749,131

MECHANICAL COUPLING DEVICES

Stanley Kelly, Enfield, England, assignor to Cosmocord Limited, Enfield, England, a British company

Application October 2, 1951, Serial No. 249,247

1 Claim. (Cl. 274—37)

This invention relates to a mechanical coupling device for an electromechanical pick-up device for the conversion of mechanical vibrations into electrical vibrations, and particularly to gramophone pick-ups.

At the present time, there is a construction of device of this kind including a transducing element, such as a piezo-electric crystal, and a stylus adapted to engage the surface of a gramophone record, the stylus being carried by a cantilever arm from the transducing element.

Such a cantilever arm is characterised by a vertical compliance and a lateral compliance, and as a matter of pick-up design it may be required to vary these compliances, and to vary independently the mass of the arm. The vertical compliance or the horizontal compliance can be varied by varying the vertical or horizontal dimensions of the arm, or the length of the arm, and a degree of control can be effected by choice of material. It will be seen, however, that variation of these variables are accompanied also by variation of mass, so that it is necessary for the designer to accept something in the nature of a compromise.

The present invention has for its object to provide a construction of cantilever arm for an electro-mechanical pick-up device in which the compliances in directions at right angles are more independent of the mass of the arm, and in accordance with the invention the arm in cross section is given the shape of which the mid-line is not straight. Preferably the arm in cross section is V-shaped, but other shapes can be employed.

In the accompanying drawing is shown by way of example one embodiment of the invention as applied to a gramophone pick-up for laterally recorded gramophone records, and a modified form of cantilever arms. In this drawing:

Figure 1 is a front view of a gramophone pick-up head, with the front cover removed,

Figure 2 is a section on the line 2—2,

Figure 3 is a perspective view of an alternative form of combined cantilever arm and crystal clamp, and

Figure 4 is a section through a further form of cantilever arm.

The pick-up shown in Figures 1 and 2 comprises a casing **10** within which is pivotally mounted a crystal plate assembly **11**. This assembly is of the bimorph type, having two flat rectangular piezo-electric crystal plates secured together to form a "twister" assembly. The assembly is disposed vertically and is provided along its upper and lower edges with clamps **12** and **13**. Midway along the length of these clamps are formed small conical projections **12***a* and **13***a* which form pivot points. The upper pivot point **12***a* engages a depression or hole in a small spring clip **14** which is located in the upper part of casing **10** and the lower point **13***a* engages a depression in a memper **15** resting on the floor of the casing. In this way the crystal can oscillate about a vertical axis.

Motion is imparted to the crystal by means of a cantilever arm **16** which is secured to the lower clamp **13**, and extends forwardly and downwardly from the crystal, passing through a slot **10***a* formed for this purpose in the casing, and having at its lower end a stylus **17**. The cantilever arm which is fragile and might be damaged by being accidentally dropped onto a record is protected by an arm **18** secured to the casing by a rivet **19**, and having two projections **18***a* and **18***b*, between which the stylus is located. The casing is closed by a cover **20**.

2

When the crystal is oscillated at its lower end by the stylus, and the upper end of the crystal is restrained, a piezo-electric voltage is produced on electrodes **21** and **22** and this output voltage is fed to contacts **23** and **24**. The restraint upon the crystal can be produced by a pad between the upper part of the crystal and the casing, or the casing can be filled with a viscous, gel-like substance, or both. The viscous filling can be inserted through the opening which can be closed by plug **25**.

The operation of a pick-up device such as that described, to translate mechanical vibrations or impulses into corresponding electrical voltages is to a large extent dependent upon the construction of the cantilever arm. The arm performs two functions; it is a mechanical transmission between the stylus and the transducing element, and in addition it serves to place upon the stylus the pressure necessary to maintain the stylus in the record groove so that it will track properly.

Considered only as a transmission system the cantilever must have a low compliance in the horizontal direction (for a lateral recording) and its effective mass should be low. It can be shown that a rod or bar is the mechanical equivalent of a low pass filter, and the highest frequency of vibration that can be transmitted by a member, corresponding to the cut-off frequency of the equivalent electrical filter, is related to the compliance and mass of the member. Since in a gramophone pick-up it is usually desired to transmit the highest audio frequencies, it is desired to place this cut-off frequency at the highest audio frequency or beyond. Thus the horizontal compliance should be low and the effective mass low, to give a high cut-off frequency.

In the vertical direction it is desirable to have a high compliance, since the transmission system should be inefficient to transmit vertical motion which leads to imperfections of reproduction of lateral recording. At the same time, the cantilever must be capable of sustaining the mechanical pressure which is applied to the stylus at the free end of the lever by the force due to the mass of the pick-up which is applied to the inner end of the lever.

In general, therefore, design of the cantilever arm of a pick-up device of this iknd involves compromises and relative adjustments of the horizontal and vertical compliances, and also the moments of inertia, which can be considered as the effective masses, in those directions. However, with the existing type of rectangular cross section cantilever arm, the compliances and the effective masses are inter-related.

The present invention is concerned with the provision of a design of cantilever arm in which greater independence of the vertical and horizontal compliances and effective masses is obtainable.

In Figures 1 and 2 the cantilever arm **16** is formed from a thin strip of metal gradually reducing in width by tapering from its base end which is attached to the crystal towards the free end of the arm, and shaped to V form in cross section. The angle of the V is made most acute at the base of the arm, being there of the order of 90°, and may or may not be increased slightly towards the free end of the arm. The tip of the arm receives the stylus **17**, as described above.

It will be seen that by varying the angle of the V of the arm it is possible to vary the vertical compliance without alteration of the mass of the arm. Further, for a V of relatively large angle a change of angle has a relatively

small effect upon the horizontal compliance. In this way the design of the arm is considerably facilitated.

The V section cantilever has the advantage that an arm of lower mass can be used, giving a higher cut-off frequency to the arm. Thus with the construction shown in Figure 1, the resonant frequency of the arm, measured with the stylus engaging a record, is raised by a factor of about 1.5 as compared with a rectangular section stylus of the same vertical and horizontal compliances.

In an alternative form of pick-up, the crystal assembly is in general similar to that shown in Figures 1 and 2, but the crystal is arranged in line with the cantilever arm. A form of combined crystal clamp and cantilever arm for such a construction is shown in Figure 3. The clamp portion **16***a* is of rectangular cross section and the arm proper is of the same shape as the arm of Figures 1 and 2; these two portions are joined by a joining section consisting of triangular areas **16***b*.

As mentioned above, the cantilever arm is resonant, and in use the electrical output of the pick-up will increase at this resonant frequency. In accordance with a feature of the present invention the resonance of a cantilever arm is reduced by the use of two or more thicknesses of material, with "lossy" material between them. An example of this feature of the invention, as applied to a V section cantilever, is indicated in Figure 4.

This figure is a cross section through a cantilever arm, composed of two thicknesses **26** and **27** of material such as spring metal, with an interposed layer **28** of a "lossy" material. This "lossy" material should have ideally the property of friction without compliance, but a viscous adhesive, or a rubber solution or rubber sheeting is suitable. The stylus is carried by one only of the thicknesses of material; the other layer may extend along part or

sustantially the whole of the length or width of the other layer, in accordance with the degree of damping required. It will be appreciated that with this construction both (or all) of the layers contribute to the mechanical strength of the arm.

While a V section cantilever arm has been described above, other sections of arm such as T or U can be used to give greater independence of vertical and horizontal compliance, or of compliance and mass than is afforded by the rectangular cross section arm; such an improvement can in general be obtained by using a cross section of which the mid-line is not rectilinear.

I claim:

For use in an electromechanical gramophone pick-up device a cantilever arm adapted to have a stylus attached to one end thereof and to be attached at the other end to a transducer element, said arm having a V-shape in cross-section, said arm being gradually reduced in cross-section and in mass in the direction of the stylus end and said arm being comprised of a plurality of longitudinal layers of material separated by a material having a high frictional loss characteristic.

References Cited in the file of this patent

UNITED STATES PATENTS

Re. 20,680	Sawyer	Mar. 29, 1938
1,884,375	Taylor	Oct. 25, 1932
2,320,572	Dann	June 1, 1943
2,480,907	Dally	Sept. 6, 1949
2,498,210	Kilgour	Feb. 21, 1950
2,519,185	Harris	Aug. 15, 1950
2,538,164	Pickering	Jan. 16, 1951