E. STRANSZKY.

ELECTRICALLY HEATED FLATIRON.

APPLICATION FILED MAR. 5, 1921.

1,417,421.

Patented May 23, 1922.

2 SHEETS—SHEET 1.

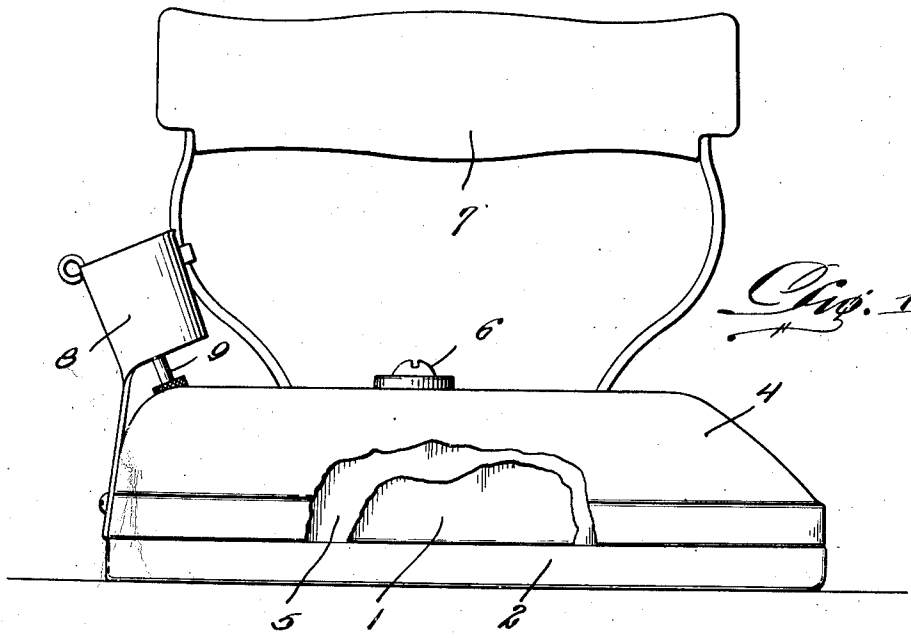

Fig. 1.

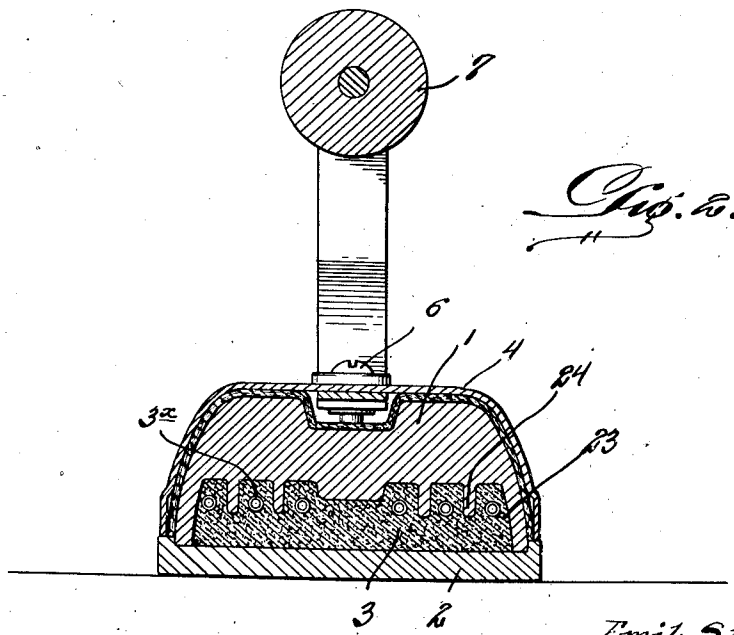

Fig. 2.

WITNESSES:

J. J. McCarthy

Emil Stranszky.

INVENTOR

BY Victor J. Evans.

ATTORNEY

E. STRANSZKY.

ELECTRICALLY HEATED FLATIRON.

APPLICATION FILED MAR. 5, 1921.

1,417,421.

Patented May 23, 1922.

2 SHEETS—SHEET 2.

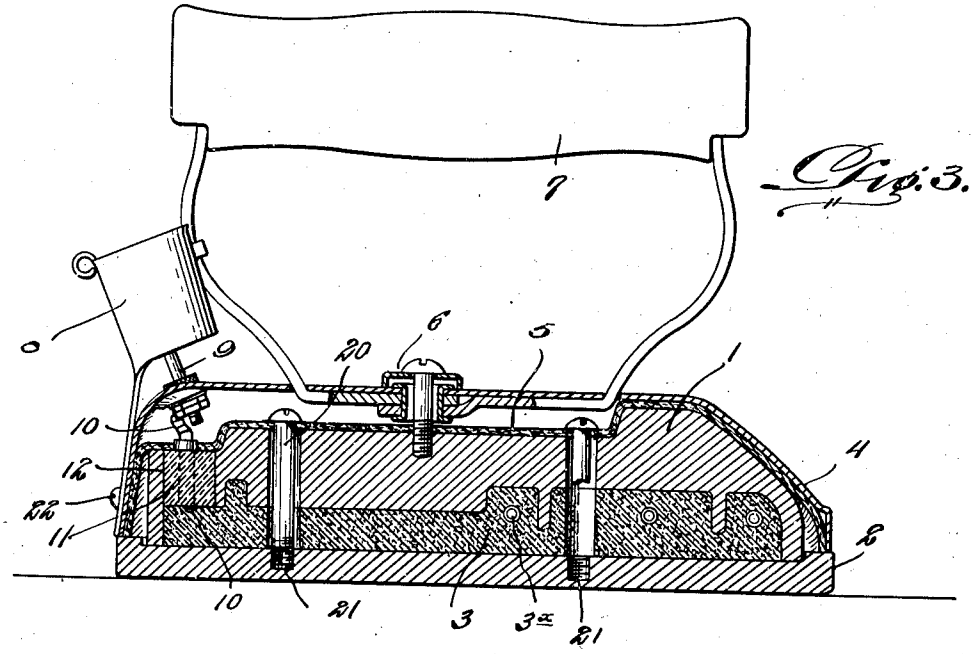

Fig. 3.

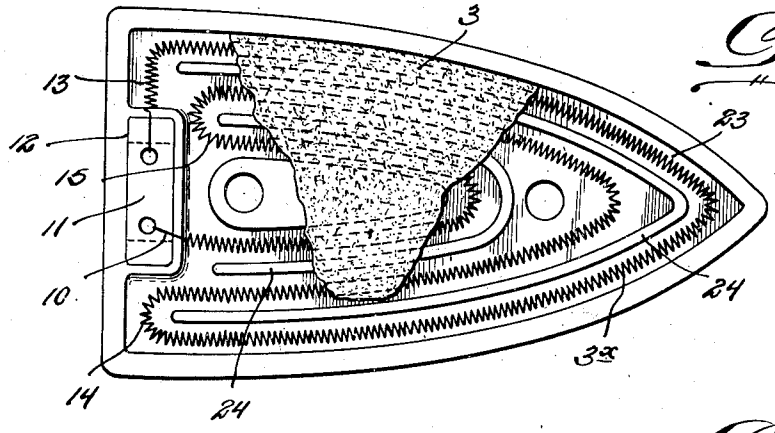

Fig. 4.

Fig. 5.

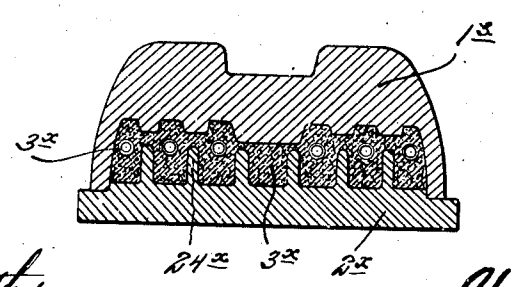

F. L. Fox,
J. J. McCarthy
WITNESSES:

Emil Stranszky.
INVENTOR

BY Victor J. Evans.
ATTORNEY

UNITED STATES PATENT OFFICE.

EMIL STRANSZKY, OF DOVER, OHIO.

ELECTRICALLY-HEATED FLATIRON.

1,417,421. Specification of Letters Patent. Patented May 23, 1922.

Application filed March 5, 1921. Serial No. 449,890.

To all whom it may concern:

Be it known that I, EMIL STRANSZKY, a citizen of the United States, residing at Dover, in the county of Tuscarawas and State of Ohio, have invented new and useful Improvements in Electrically-Heated Flatirons, of which the following is a specification.

One object of my present invention is the provision of an electrically heated flat iron, susceptible of being manufactured economically and with facility, and having its elements so constructed and relatively arranged that the iron is reliable and efficient in operation and is generally well adapted to meet the requirements placed on an electrically heated flat iron.

Another object is the provision in an electrically heated flat iron of improved means whereby the clamp body and the bottom plate are efficiently heated by the stretches of the heating unit.

Another object is the provision of an electrically heated flat iron in which the clamp body, the heating element and the dielectric refractory plastic material or cement in which the heating element is carried are formed in one unit so that a number of the units such as described may be used in succession in conjunction with the bottom plate, the casing and the other elements of the iron.

To the attainment of the foregoing, the invention consists in the improvement as hereinafter described and definitely claimed.

In the accompanying drawings, forming part hereof:—

Figure 1 is a side elevation, partly broken away of an electrically heated flat iron constructed in accordance with my invention.

Figure 2 is a transverse section of the same.

Figure 3 is a vertical longitudinal section of the iron, with some parts in elevation.

Figure 4 is an inverted plan view of the iron with the bottom plate removed and the dielectric refractory element partly broken away.

Figure 5 is a detail transverse section of a modification hereinafter explicitly referred to.

Similar numerals designate corresponding parts in Figures 1 to 4 to which reference will first be made.

Among other elements my novel iron comprises a clamp body 1 which is preferably cast of iron or other suitable metal and is machined in the shape illustrated. The iron also comprises a bottom plate 2, a dielectric and refractory element 3 of appropriate cement or plastic material, a heating element $3^{\times}$ of coiled wire or of carbon, a casing 4 preferably of sheet metal, and an interposed guard layer 5 preferably of asbestos.

Connected at 6 to the casing 4 and the clamp body 1 is a handle 7, and interposed between and connected to the casing 4 and the handle 7 is a plug socket 8, the terminals 9 of which are carried through the casing 4 and are electrically connected within the casing with conductors 10, extended through a dielectric, preferably porcelain, block 11 and electrically connected at their lower ends, Figure 4, with the terminals of the heating unit $3^{\times}$. The block 11 is seated in a vertically disposed socket 12, formed in the rear portion of the clamp body 1, and is superimposed on the dielectric and heat conducting element 3. The heating element $3^{\times}$ is made of a plurality of loops, Figure 4, arranged one within the other in nested relation though spaced apart. In this connection it will be understood that one end 13 of the outer loop of the heating element is connected to one conductor 10; that the other end of the outer loop is connected through a bight 14 with the adjacent end of the next inner loop; that the opposite end of the last-named loop is connected through a bight 15 with one end of the innermost loop; and that the opposite end of the innermost loop is connected to the other conductor 10. Manifestly the heating unit with the several spaced stretches as described is highly efficient in uniformly heating the clamp body 1 which is adapted to serve as a heat reservoir and uniformly heat the bottom plate 2. The clamp body 1 and the asbestos layer 5 are detachably connected with the bottom plate 2 through the medium of headed screws 20 which engage threaded apertures 21 in the upper side of the bottom plate 2. I would also have it understood that the casing 4 is detachably connected with the clamp body 1 through the medium of screws 22 or any other appropriate means.

As will be readily understood by comparison of Figures 2 and 3 the underside of the clamp body 1 is chambered or cupped as indicated by 23, and in the said chamber or cup are arranged fins 24 which are integral

with the clamp body 1 and are interposed between though spaced from the stretches of the heating element 3^x. It will be understood by reference to Figures 2 and 3 that the said fins are embedded in the dielectric and refractory element 3, and by comparison of Figures 2 and 3 with Figure 4 it will be understood that the fins are of loop shape; the innermost fin 24 of loop shape straddling the innermost loop of the heating unit 3^x, and the outer looped shaped fin 24 being arranged to straddle the intermediate loop of the heating element, and being interposed between said intermediate loop and the outermost loop of the heating element.

I prefer in the manufacture of my novel iron to invert the clamp body 1 and first pour a thin layer or cement 3 in the chamber or cup 23. I then press the heating element 3^x into the cement, after which I pour another layer of the cement and subject the cement to pressure in order to obtain a smooth surface flush with the edges of the cup or chamber 23 and adapted to be opposed to the inner side of the bottom plate 2. The unit including the clamp body 1, the heating unit 3^x, and the cement 3 is then baked after which the said unit is adapted to be used in conjunction with the other elements in the relation illustrated. Manifestly when the unit including the clamp body 1, the cement 3 and the heating unit 3^x is rendered useless by the wearing out of the heating unit 3^x, the said unit may be expeditiously and easily disassociated from the other elements and may be replaced with a similar fresh unit. This is entirely feasible from an economical standpoint inasmuch as when formed of cast iron or other cast metal the clamp body 1 is inexpensive as is also the cement 3.

The construction shown in Figure 5 is similar to that before described with the exception that the fins 24^x for gathering heat or taking up heat from the stretches of the heating unit 3^x are carried by the bottom plate 2^x instead of by the clamp body 1^x. It will be apparent, however, that the modified construction of Figure 5 is possessed of all of the practical advantages ascribed to the embodiment shown in Figures 1 to 4. With respect to the embodiment shown in Figure 5 I deem it proper to say that precedent to the fastening of the bottom plate 2^x to the clamp body 1^x, the cement 3^x is baked to drive moisture therefrom at which time the steam generated can escape between the edges of the cup or chamber in the clamp body 1^x and the opposed side of the bottom plate 2^x.

I have entered into a detail description of the construction and relative arrangement of parts embraced in the present and preferred embodiment of my invention in order to impart a full, clear and exact understanding of the said embodiment. I do not desire, however, to be understood as confining myself to the said specific construction and relative arrangement of parts inasmuch as in the future practice of the invention various changes and modifications may be made such as fall within the scope of my invention as defined in my appended claims.

Having described my invention, what I claim and desire to secure by Letters Patent, is:—

1. A unit for incorporation in an electrically heated iron comprising a cupped or chambered clamp body, a filling of dielectric and refractory plastic material in the cup or chamber of said body, and a heating unit embedded in the said filling of plastic material.

2. A unit for incorporation in an electrically heated iron comprising a cupped or chambered clamp body, a filling of dielectric and refractory plastic material in the cup or chamber of said body, and a heating unit embedded in the said filling of plastic material; the said plastic material being baked.

3. A unit for incorporation in an electrically heated iron comprising a cupped or chambered clamp body, a filling of dielectric and refractory plastic material in the cup or chamber of said body, and a heating unit embedded in the said filling of plastic material; the said heating unit including spaced stretches, and the clamp body being provided with fins disposed in the filling and interposed between and spaced from stretches of the heating unit.

4. A unit for incorporation in an electrically heated iron comprising a cupped or chambered clamp body, a filling of dielectric and refractory plastic material in the cup or chamber of said body, and a heating unit embedded in the said filling of plastic material; the said heating unit including a plurality of nested and spaced loops; and the clamp body being provided with loop shaped fins embedded in the filling and interposed between and spaced from the loops of the heating unit and straddling some of said loops.

5. An electrically heated iron comprising a bottom plate, a cupped or chambered clamp body, a filling of dielectric refractory plastic material disposed in the cup or chamber of the clamp body, a heating unit embedded in the said filling, and fins carried by one of the two first-named elements and embedded in the filling and interposed between and spaced from the stretches of the heating unit.

6. An electrically heated iron comprising a bottom plate, a cupped or chambered clamp body, a filling of dielectric refractory plastic material disposed in the cup or

chamber of the clamp body, a heating unit embedded in the said filling, and fins carried by one of the two first-named elements and embedded in the filling and interposed between and spaced from the stretches of the heating unit; the said filling being baked.

7. An electrically heated iron comprising a bottom plate, a cupped or chambered clamp body, a filling of dielectric refractory plastic material disposed in the cup or chamber of the clamp body, a heating unit embedded in the said filling, and fins carried by one of the two first-named elements and embedded in the filling and interposed between and spaced from the stretches of the heating unit; the said heating unit including a plurality of nested and spaced loops, and one of the two first-named elements being provided with fins of loop shape straddling and spaced from some of the loops of the heating unit.

8. An electrically heated iron comprising a bottom plate, a cupped or chambered clamp body, a filling of dielectric refractory plastic material disposed in the cup or chamber of the clamp body, a heating unit embedded in the said filling, and fins carried by one of the two first-named elements and embedded in the filling and interposed between and spaced from the stretches of the heating unit, in combination with means detachably connecting the clamp body and the bottom plate together.

9. An electrically heated iron comprising a bottom plate, a cupped or chambered clamp body, a filling of dielectric refractory plastic material disposed in the cup or chamber of the clamp body, a heating unit embedded in the said filling, and fins carried by one of the two first-named elements and embedded in the filling and interposed between and spaced from the stretches of the heating unit, in combination with means detachably connecting the clamp body and the bottom plate together, a casing arranged over and detachably connected with the clamp body and equipped with a handle, a dielectric block carried in the clamp body, conductors extending through the said block and connected with the heating unit, and a guard interposed between the clamp body and the casing.

In testimony whereof I affix my signature.

EMIL STRANSZKY.