F. A. WHITE.

APPARATUS FOR DISPENSING CONGEALED FOODS AND DESSERTS.

APPLICATION FILED FEB. 28, 1919.

1,380,029.

Patented May 31, 1921.

2 SHEETS—SHEET 1.

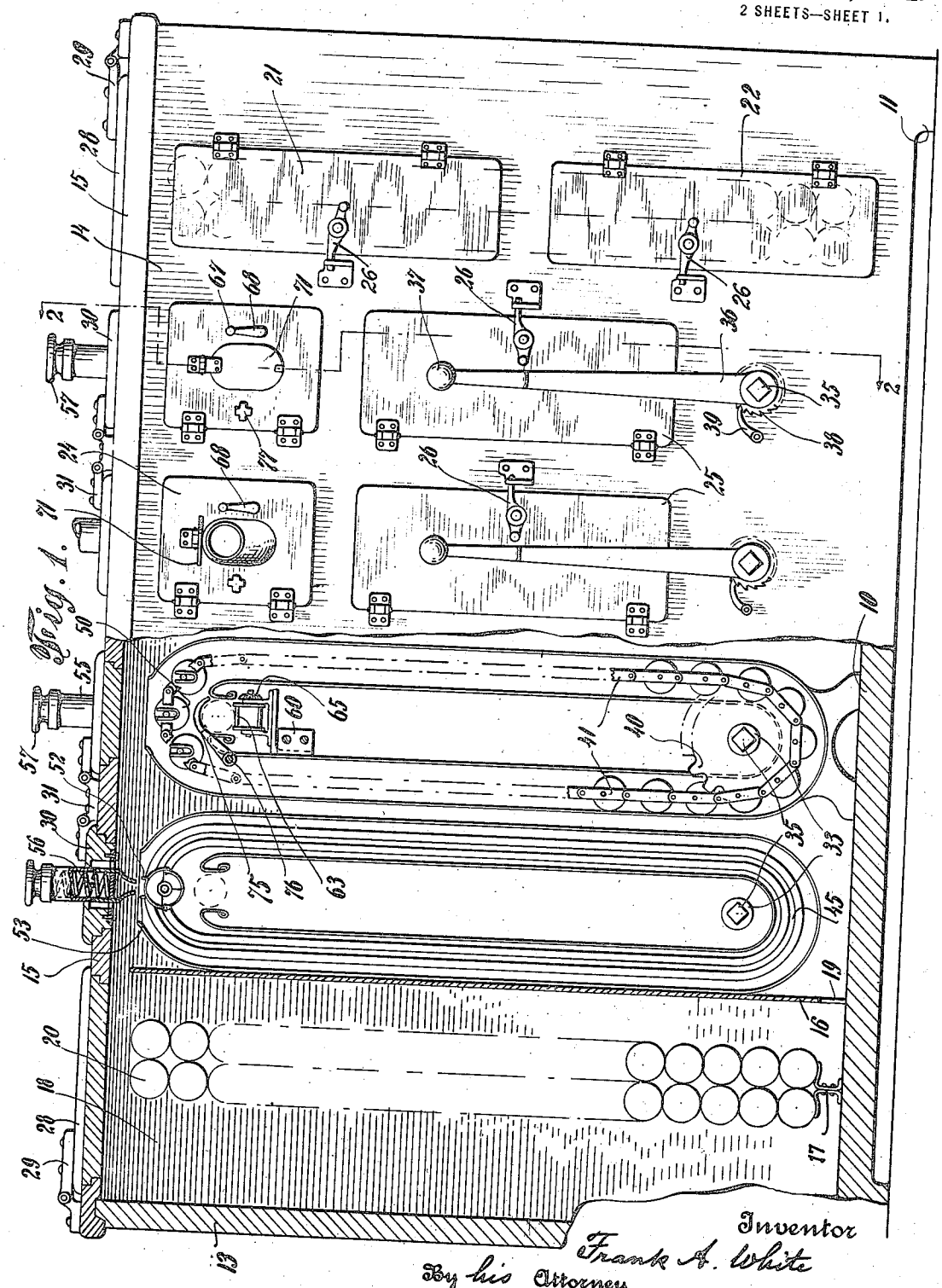

Fig. 1.

Inventor

Frank A. White

By his Attorney

William Richards

F. A. WHITE.

APPARATUS FOR DISPENSING CONGEALED FOODS AND DESSERTS.

APPLICATION FILED FEB. 28, 1919.

1,380,029.

Patented May 31, 1921.

2 SHEETS—SHEET 2.

Fig. 2.

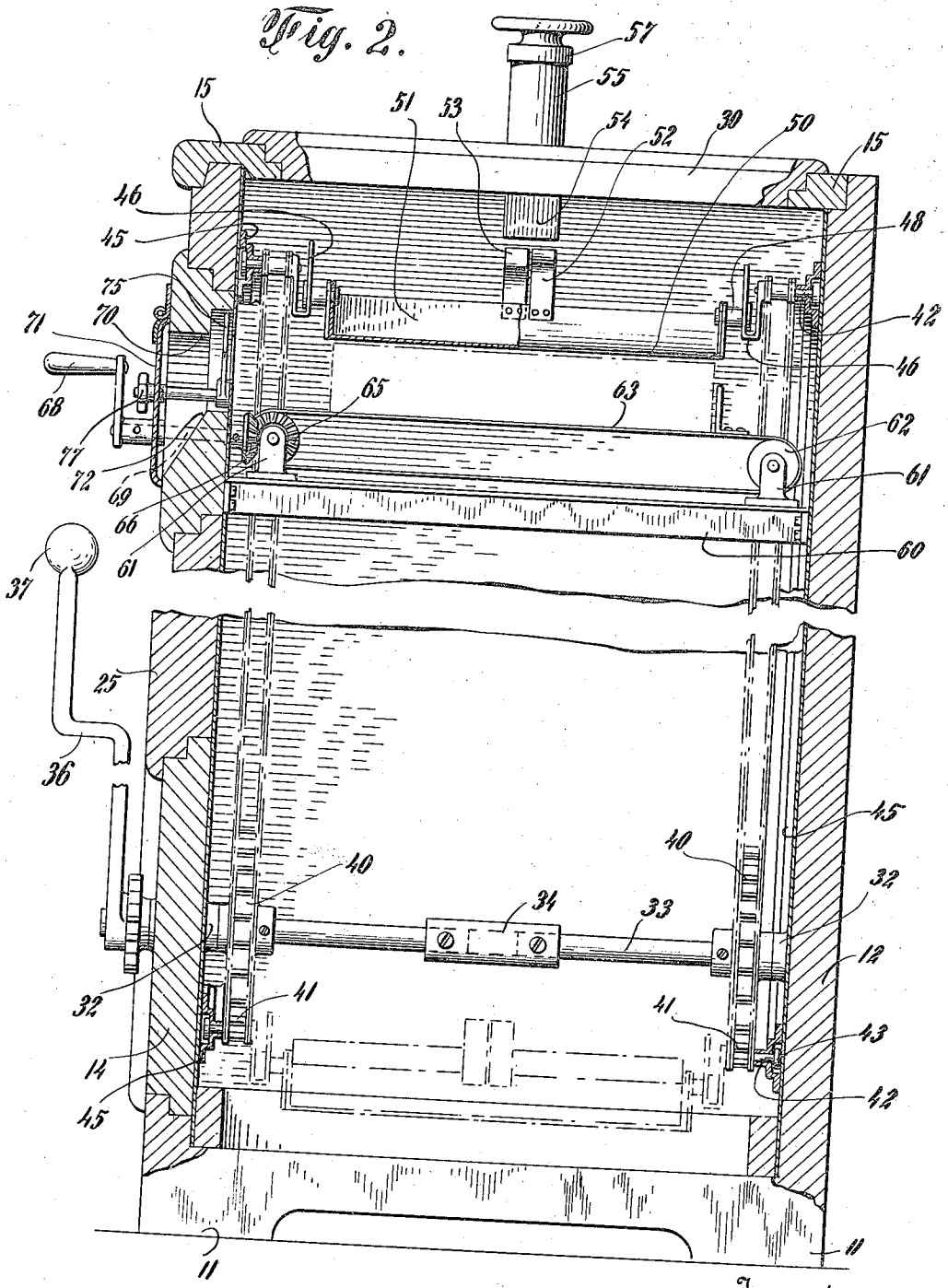

Inventor

Frank A. White

By his Attorney

William C. Richards

UNITED STATES PATENT OFFICE.

FRANK A. WHITE, OF CLEVELAND, OHIO.

APPARATUS FOR DISPENSING CONGEALED FOODS AND DESSERTS.

1,380,029. Specification of Letters Patent. Patented May 31, 1921.

Application filed February 28, 1919. Serial No. 279,819.

To all whom it may concern:

Be it known that I, FRANK A. WHITE, a citizen of the United States, residing at Cleveland, county of Cuyahoga, and State of Ohio, have invented certain new and useful Improvements in Apparatus for Dispensing Congealed Foods and Desserts, of which the following is a specification.

This invention relates to improvements in apparatus for dispensing congealed foods and desserts, such as water-ices, sherberts, frozen puddings, custards, ice cream, etc.

The principal object of the invention is to produce a container for foods, of the kind mentioned, in which they may be retained indefinitely without deterioration by the use of a very small quantity of ice.

A further object is to produce an apparatus from which any desired portion can be delivered in an easy and expeditious manner without exposure of the remainder to the air, the delivery being accomplished mechanically, avoiding manual contact or contamination with objects other than those forming a part of the structure and wholly preventing dust and the like from entering the container, thus being sanitary.

Another object is to produce a neat and attractive appearing container adapted to ornament the interior of the store in which the goods are vended.

These and various other objects are attained by the novel construction and combination of parts hereinafter described and shown in the accompanying drawings, forming a material part of this disclosure, and in which—

Figure 1 is a front elevational view of an apparatus made in accordance with the invention, parts being broken away to disclose the construction, and

Fig. 2 is a transverse sectional view taken on line 2—2 of Fig. 1, drawn to an enlarged scale.

Referring to the drawings, it will be seen that the cabinet comprises a substantially rectangular structure having a base or flooring 10, resting upon corner supports 11, from which rise a stationary back 12, and end walls 13, joined with a front wall 14, and cover 15.

A plurality of compartments are formed within the cabinet by vertical plates 16, the end compartments 18 being adapted to contain broken ice used to surround the containers 20 which extend in parallel transversely through the compartments and rest upon supports 17, raised from the floor 10.

These containers are hollow tubes adapted to contain the cream or other goods in a frozen condition, shaped into solid cylinders easily receivable within the containers and maintained in a congealed state due to the proximity of the ice.

Openings 19 extend through the bottom and top of the cross plates 16 so as to permit the water from the melted ice to flow to a central position where it may escape in the ordinary manner.

Arranged in the wall 14 at the front of the end compartments are doors 21 and 22, respectively upper and lower, while at the front of the center compartments are other doors 24 and 25 all of the doors being hingedly engaged and held in closed position by latches 26 of the usual type of construction.

These doors are adapted to form a tight joint with the cover or front plate 14 so as to prevent the passage of air, thereby preserving the food within the cabinet and preventing the heat entering.

Ice is supplied to the compartment 18 through cover plate openings covered with doors 28, secured by hinges 29, so that the cans or cylinders therein can be packed with ice in the ordinary manner.

Also above the center compartment are doors 30, engaged by hinges 31, extending almost the entire length of the cover plate 15, the doors being formed in the manner usually employed in making refrigerating doors, and are used for the purpose of transferring the cream containing cylinders from the end compartments to the center or what may be called the service compartments.

Fixed at spaced intervals within the central compartment, to the front and rear walls, are bearings 32 in which are rotatably journaled shafts 33 secured together by a central coupling 34 so as to permit ready assembling of the same. One end of each shaft extends out through the front plates 14 the extending ends having square portions 35 receptive of the lower ends of levers 36 whose upper ends are offset laterally and provided with globular terminals 37, serving as handles whereby the levers may be operated. Secured upon the shafts, within the casing at each end thereof, are sprocket wheels 40 over which run conveyer chains

41 and formed with each of the links of the chain are laterally extending pins 42 having enlarged heads 43 the same being movable within a track or guideway 45, its lower end formed concentric with the shaft 33 then following in parallel along the inner side walls of the cabinet to a point near the top where they are curved as at the bottom thereby causing the chains 41 to travel circuitously within the compartment.

Extending inwardly, opposite the pins 42, are hanger elements 46, the same being arranged in pairs facing each other and secured to each of the links of the chain, and engageable in these hanger elements are studs 48 having enlarged heads the inner ends of the studs supporting longitudinally disposed pendant carriers formed in two sections 50 and 51 adapted to receive the frozen cream in a cylindrical shape.

Each of the carrier sections 50, 51 is of quadrantal shape in cross-section and the ends thereof are pivotally engaged with the ends of the studs 48, the two sections forming a semi-cylindrical carrier as shown in Fig. 1, and secured approximately centrally in the length of the section 50 is an extending clip 52, a similar clip 53 being fixed upon the opposite element 51.

Engageable with these clips, in such a manner as to spread the elements 50 and 51, are spring prongs 54 extending downward from sleeves 55, normally held in a raised position by the central springs 56, the sleeves 55 being provided with actuating knobs 57.

Fixed upon the cross rails 60 are brackets 61 in which are mounted pulleys 62 and trained over the pulleys is a traveling belt conveyer 63, immediately below the carriers 50 and 51, so as to receive the frozen material delivered by gravity from the carriers upon depressing the knob 57.

Fixed upon one side of the pulley 62 is a bevel gear 65 meshing with the bevel gear 66 set on the inner end of a spindle 67 extending inward through the door 24 and provided with an operating handle 68 so that upon rotating the same the conveyer is advanced, bringing the food roll outward where it may be received through an opening 70, normally covered by a trap door 71 engaged upon the face of the main door 24, the lower beveled portion 72 of the opening 70 being so slanted that the sheared portion of the food roll will drop freely therefrom.

In order to sever the cream into different lengths a knife 75, having its blade curved in conformity with the roll, is supported upon a spindle 76 which passes through the door and is provided with an operating knob 77, which upon being turned obviously severs a portion of the extending frozen roll, permitting it to drop upon the inclined surface 72 and if the door 71 be raised, it may be received upon a plate held for that purpose.

From the foregoing it will be seen that a cabinet capable of holding a considerable quantity of the frozen goods has been provided, each of the frozen rolls being preferably covered with wax paper such as is used upon brick cream at the present time.

When they are removed from the end compartments of the cabinet which serve as storage reservoirs they are unwrapped and placed in the carriers 50 and 51 and are attached to the chain so that a considerable supply may always be on hand.

To fill the dispensing device the doors in the roof will be opened and the desired number of the rolls of cream taken out of the storage reservoirs and placed in the carriers, the lever 36 being actuated to bring one after another of the carriers in position to receive a roll, after which the top doors are closed, permitting the roll to fall into the space provided for it immediately above the surface of the conveyer 23. The swinging door 71 is then raised, the handle 68 operated to project a suitable length of the frozen roll and then the knob 77 actuated, causing the knife to sever any desired quantity.

After one roll of food has been dispensed another one is brought into position for use by actuating the lever 36 and depressing knob 57.

Having thus described my invention what I claim as new and desire to secure by Letters Patent is—

1. A cabinet comprising end storage and central service compartments, movable carriers arranged within the latter compartments, means for causing said carriers to move circuitously therein, a conveyer, means for delivering articles from said carriers to said conveyer, and means for dispensing portions of said articles therefrom, said means comprising a cutting element operable from outside the cabinet.

2. A cabinet comprising a series of compartments, a conveyer, carriers in a portion of said compartments adapted to convey articles herein, means for successively delivering articles from said carriers to the conveyer, and means for dispensing portions of said articles from said conveyer, said means comprising a cutting element operable from outside the cabinet.

3. A cabinet comprising a series of storage and service compartments, two part pivoted carriers in said service compartments, means for causing said carriers to move progressively therein, a conveyer, means for causing said carriers to successively deliver articles to said conveyer, and a cutting element adapted to sever portions of said articles from said conveyer.

4. A cabinet comprising a series of storage

CERTIFIED COPY

and service compartments, two part pivoted carriers in said service compartments, means for causing said carriers to move progressively therein, a conveyer, means for causing said carriers to successively open to deliver articles upon said conveyer by gravity, and a manually operable cutter arranged to sever portions of said articles.

5. In a device of the class described, a series of traveling carriers each of semi-cylindrical shape and each divided longitudinally into two sections, spring clips fixed to the respective sections, a device adapted to engage the spring clips to separate the sections, and means for bringing the carriers successively into juxtaposition with the said device.

6. In a device of the class described a service compartment, a conveyer arranged within the same and movable transversely thereof, conveyer chains, guideways adapted to cause said chains to move circuitously with respect to said conveyer, hanger elements carried by said chains, carriers supported in said hangers and adapted to convey articles therein and to discharge their contents upon said conveyer, and independent means for actuating said conveyer and chains.

7. In a device of the class described a service compartment, a conveyer arranged within the same and movable transversely thereof, conveyer chains, guideways adapted to cause said chains to move circuitously with respect to said conveyer, hanger elements carried by said chains, carriers supported in said hangers and adapted to convey articles therein and to discharge their contents upon said conveyer, independent means for actuating said conveyer and chains, and means for dispensing portions of said articles from said compartment.

8. A dispensing cabinet comprising a compartment structure, means for access to each of said compartments at the front and top thereof, means for conveying articles circuitously in each of said compartments, means for manually operating said conveying means, said carriers being made in sections, separable at their lower edges longitudinally, means for opening said carriers when in a certain position, a traveling conveyer mounted transversely in said compartment adapted to receive articles from said carrier, and means for actuating said conveyer whereby the articles are projected out from the front of said compartment.

9. A dispensing cabinet comprising compartments having openings at the front and top thereof, to each of its several compartments, sprocket chains movable circuitously in certain of said compartments, means for actuating said sprocket chains, carriers engaged between opposed pairs of said chains, guides for said carriers, means for opening said carriers when in a certain position, endless conveyers mounted transversely in said structure, means for actuating said endless conveyers, whereby articles are delivered to one of the openings at the front of said cabinet, and a knife adapted to sever the delivered articles at any predetermined point, said knife being operable from the exterior of said cabinet.

10. A dispensing cabinet comprising a structure having a plurality of compartments arranged vertically therein, means for the storage of refrigerating material in the outermost of said compartments, a plurality of cylindrical dispensing carriers in the inner of said compartments, means for causing the said carriers to move circuitously therewithin, means for guiding said carriers, means operable through the top of said cabinet for opening each of said carriers as they pass below a certain point therein, means for conveying articles dispensed from said carriers outwardly of said cabinet, and means for slicing said articles so as to deliver a certain predetermined portion, said operating means being operable through the walls of said cabinet.

In testimony whereof I have affixed my signature.

FRANK A. WHITE.