United States Patent

Johnmeyer, Sr.

[15] **3,663,063**

[45] **May 16, 1972**

[54] TRENCHING IMPLEMENT

[72] Inventor: **Hillard E. Johnmeyer, Sr.,** Rolla National Airport, Vichy, Mo. 65580

[22] Filed: **Dec. 21, 1970**

[21] Appl. No.: **100,041**

[52] **U.S. Cl.** **299/86,** 37/94, 299/39, 299/89

[51] **Int. Cl.** **E02f 5/08**

[58] **Field of Search** 299/15, 39, 86, 89; 37/91–97, 142; 175/373

[56] **References Cited**

UNITED STATES PATENTS

2,710,179	6/1955	Cartlidge	299/89
3,519,309	7/1970	Engle et al.	299/86
2,934,841	5/1960	Tibbits	37/94
3,364,602	1/1968	Renzaglia	37/94

Primary Examiner—Ernest R. Purser
Attorney—Koenig, Senniger, Powers and Leavitt

[57] **ABSTRACT**

A trenching implement adapted for cutting a narrow trench in rock or frozen ground comprising a wheel which is mounted for rotation in a power trenching vehicle and which has a plurality of cutting bit holders spaced at equal intervals around its periphery with a cutting bit rotatably and removably mounted in each bit holder. The bit holders are mounted in such positions on the wheel as to hold all the cutting bits at the same positive rake angle, certain of the bit holders holding the respective cutting bits in the plane of the wheel, others holding the respective bits at skew angles with respect to the plane of the wheel with the respective bits extending out at one side of the wheel, and other holders holding their respective bits at skew angles with respect to the plane of the wheel with the respective bits extending out at the other side of the wheel.

5 Claims, 5 Drawing Figures

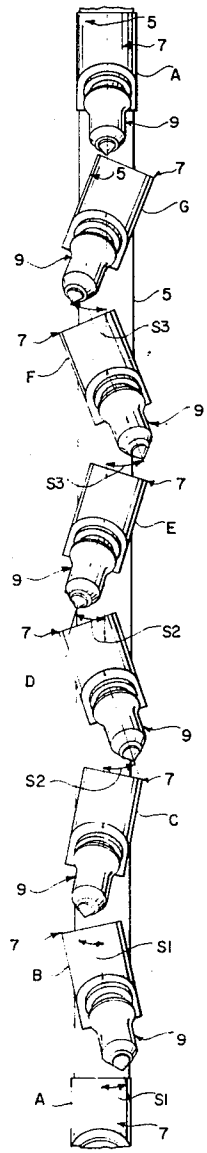

PATENTED MAY 16 1972

3,663,063

SHEET 1 OF 2

FIG. 1

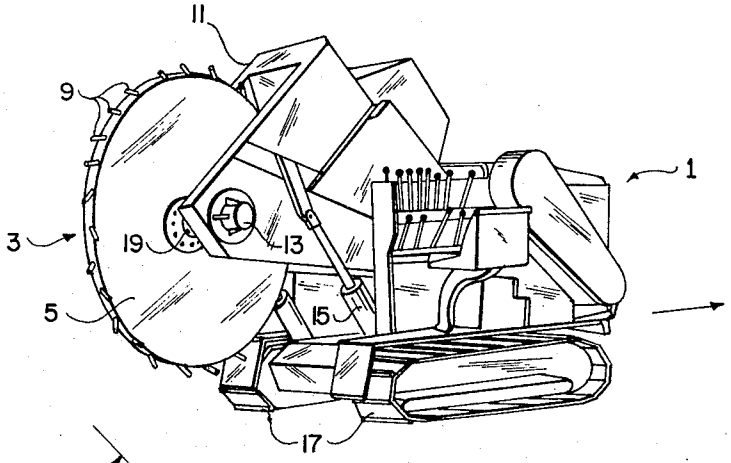

FIG. 2

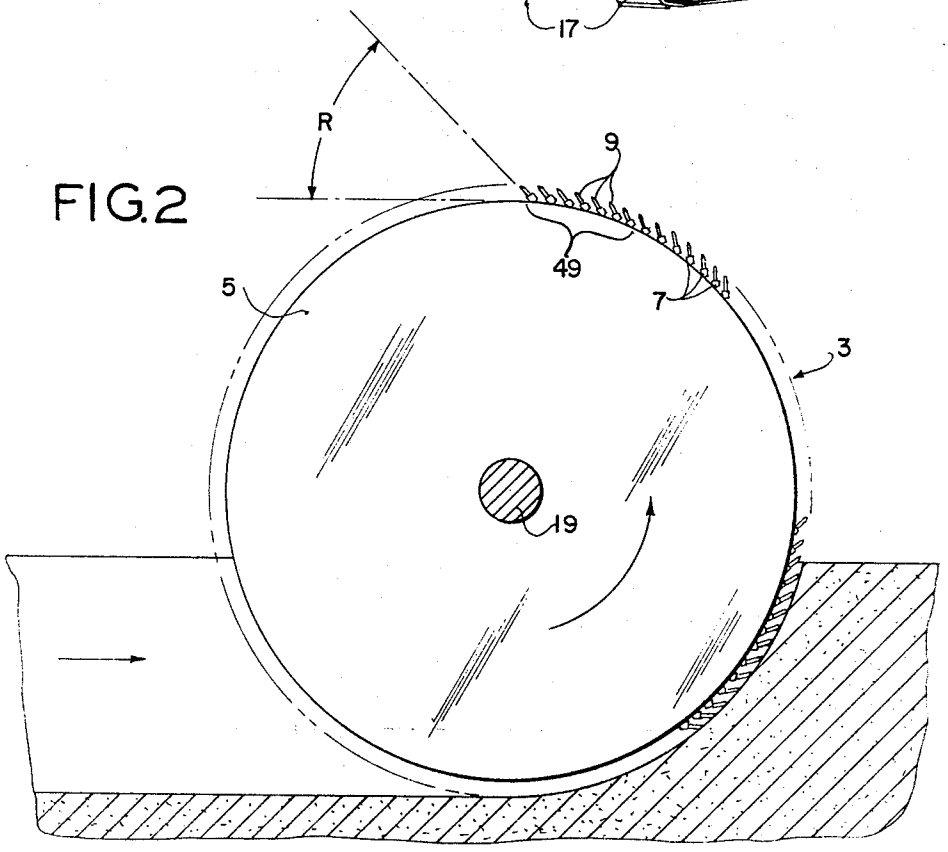

Willard E. Johnmeyer, Sr.,
Inventor
Koenig, Senniger,
Powers and Leavitt,
Attorneys

FIG.3

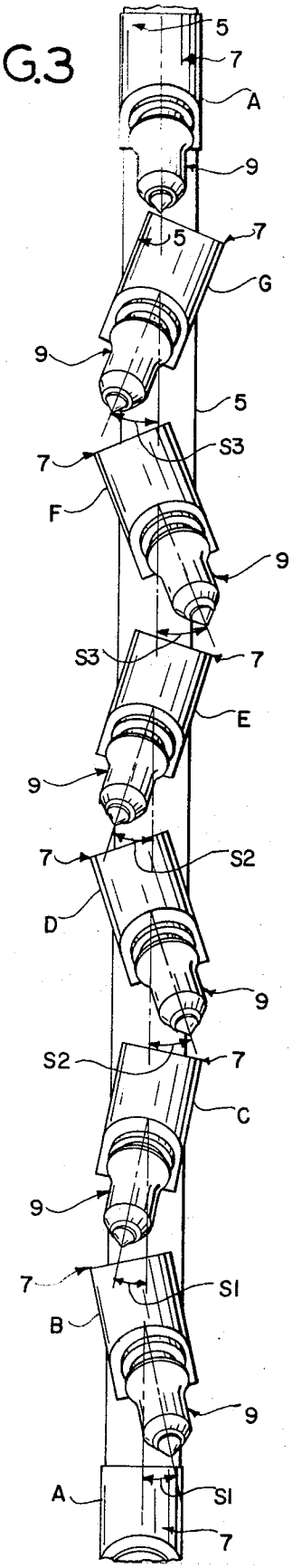

FIG.5

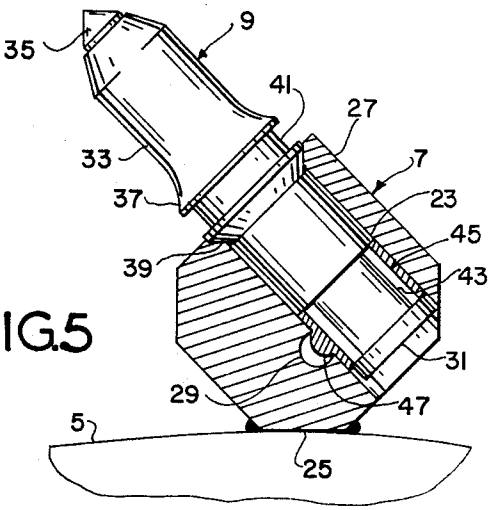

FIG.4

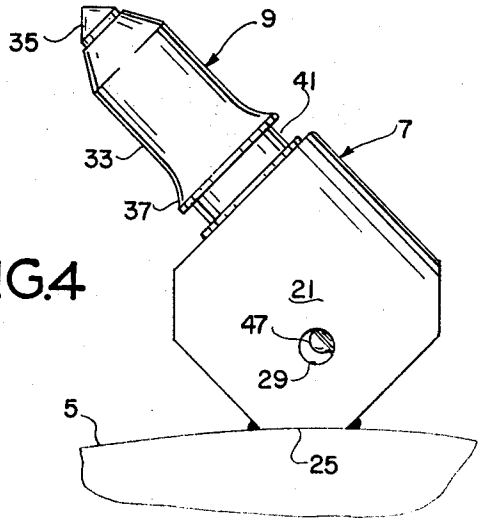

TRENCHING IMPLEMENT

BACKGROUND OF THE INVENTION

This invention relates to a trenching implement, and more particularly to a cutting wheel capable of cutting a trench in rock as well as in frozen ground.

The invention is especially concerned with a toothed trench cutter wheel for use on a power trenching vehicle for cutting a trench in frozen ground and in rock for laying underground electrical cables, pipe and the like. Such wheels have heretofore been used on a vehicle having means for driving the wheel and lifting and lowering it, but prior wheels have at best been capable of trenching in frozen ground, not in rock (even relatively soft rock such as limestone) without having their teeth wear out or otherwise fail after cutting only a few feet of trench.

SUMMARY OF THE INVENTION

Among the several objects of the invention may be noted the provision of a toothed trench cutter wheel for use on a vehicle as above described adapted to cut a trench in rock as well as in frozen ground without excessive tooth wear or other failure; and the provision of such a wheel adapted to cut a clean trench, laying up the cuttings on either side of the trench for back-filling after laying of the cable or pipe in the trench.

In general, a trenching implement of this invention comprises a wheel constituted by a substantially solid metal disk, adapted for rotation on its axis in cutting direction, a plurality of cutting bit holders welded on the periphery of the disk; spaced at intervals around the periphery of the disk, and a cutting bit rotatably and removably mounted in each holder, each holder being mounted in such position on the periphery of the disk as to hold the respective bit at a positive rake angle with respect to the direction of rotation of the disk. Certain bit holders are mounted in such position on the periphery of the disk as to hold the respective bits in the plane of the disk. Other holders are mounted in such position on the periphery of the disk as to hold the respective bits at skew angles with respect to the plane of the disk and with the respective bits extending out at one side of the disk, and other holders are mounted in such position on the periphery of the disk as to hold the respective bits at skew angles with respect to the plane of the wheel and with the respective bits extending out at the other side of the wheel.

Other objects and features will be in part apparent and in part pointed out hereinafter.

BRIEF DESCRIPTION OF THE DRAWINGS

FIG. 1 is a perspective of a trenching machine mounting an implement of this invention;

FIG. 2 is a view showing an implement of this invention cutting a trench;

FIG. 3 is a developed view of a segment of the peripheral edge of the implement showing the arrangement of certain cutter holders and bits;

FIG. 4 is a side elevation of a bit holder; and

FIG. 5 is an enlarged vertical section of a bit holder on line 5—5 of FIG. 3.

Corresponding reference characters indicate corresponding parts throughout the several views of the drawings.

DESCRIPTION OF THE PREFERRED EMBODIMENT

Referring to the drawings, FIG. 1 shows a conventional power trenching vehicle, generally designated by the reference numeral 1, having a trenching implement of this invention indicated at 3 mounted therein for rotation on its axis. The trenching implement comprises a relatively large-diameter cutting wheel 5 having a plurality of cutting bit holders each designated by the reference numeral 7 spaced around its periphery, with a cutting bit 9 removably mounted in each holder. As shown in FIG. 2, the holders 7 are mounted in such position on the periphery of the wheel 5 as to hold all the bits 9 at a positive rake angle R (as will be hereinafter defined) with respect to the direction of rotation of the wheel. Additionally, certain bit holders as indicated at A in FIG. 3 are mounted in such position on the periphery of the wheel as to hold their respective bits in the plane of the wheel. Other bit holders as indicated at B, D and F are mounted in such position on the periphery of the wheel as to hold their respective bits as skew angles (as will be hereinafter defined) with respect to the plane of the wheel and with the respective cutting bits mounted therein extending out at one side of the wheel (its right side as shown in FIG. 3). Still other bit holders as indicated at C, E and G are mounted in such position on the periphery of the wheel as to hold their respective bits at skew angles with respect to the plane of the wheel and with the respective cutting bits mounted therein extending out at the other side of the wheel (its left side as shown in FIG. 3).

More particularly, the power trenching vehicle 1 is adapted to excavate a substantially vertical trench in the ground for the laying of underground electrical cable, pipe and the like. It has a pivoted yoke 11 in which wheel 5 is rotatably mounted, means indicated at 13 for driving the wheel counterclockwise as shown in FIGS. 1 and 2, hydraulic cylinder means indicated at 15 for raising and lowering the yoke and the wheel mounted therein for cutting trenches of different depths, and endless track means 17 for propelling the vehicle in the direction of arrows shown in FIGS. 1 and 2 for trench cutting feed purposes.

The cutting wheel 5 comprises a solid steel disk approximately 1 inch thick and 9 feet in diameter, for example. The wheel is secured on a center shaft 19 adapted to be driven by the driving means 13.

Referring to FIGS. 4 and 5, each bit holder 7 comprises a metal block or body 21 having a bore 23 extending therethrough from one end to the other in the central plane thereof between its side inclined at an angle of 45° as shown to a base 25 of the body. The thickness of the wheel or disk 5 corresponds generally to the width of a block 21 (see FIG. 3). The bore 23 is countersunk at its high end (its left end as shown in FIG. 5) as indicated at 27, and the block or body 21 is provided with a transverse hold 29 therethrough tangentially intersecting the bore adjacent its low end. The cutting bit 9 has a cylindric shank 31 rotatable in the bore and a cylindric outer end portion 33 having a conically pointed relatively hard outer end 35 (of tungsten carbide or the like) constituting its cutting point. At the root of the outer end portion is an enlargement 37 having a conical portion 39 engageable in the countersink 27, this enlargement having an annular groove 41. The shank has an annular groove 43 loosely receiving a spring ring 45 having outwardly extending bosses 47 one of which appears in FIG. 5 snapped into the groove provided by hole 29. This holds the bit in the holder while permitting the bit to rotate, and the bit is readily removed from and inserted in the holder via the high end of the bore 23.

In accordance with this invention, each bit holder 7 has its base 25 secured by welding (see FIGS. 4 and 5) to the periphery of the wheel or disk so that all the cutting bits have substantially the same positive rake angle R, as shown in FIG. 2. The rake angle R may be defined as the angle formed by the axis of the bit and the tangent to the wheel at the intersection of the axis of the bit and the periphery of the wheel, as shown in FIG. 2, and corresponds to the angle of inclination of the bore 23 in the block relative to the base 25 of the block. As shown in FIG. 3, the bit holders or disks are oriented relative to the plane of the wheel such that some of the cutting bits are in the plane of the wheel, and other cutting bits are angled outwardly from the plane of the wheel at skew angles S. The skew angle S may be defined as the angle formed by the intersection of the plane of the wheel and the plane containing the axis of the cutting bit and the center of the wheel.

In FIG. 2, the bit holders 7 are shown to be arranged in sets indicated at 49 around the wheel 5 with the number of sets depending on the number of bits in each set and the diameter of the wheel. A typical set of seven bit holders holding seven bits

is shown in FIG. 3, with the first bit holder A in the plane of the wheel (i.e., the central plane of this bit holder or block A is in the plane of the wheel), the second and third bit holders in the set, B and C, respectively, being mounted with the central planes thereof at at a first skew angle S1 (e.g., 12°) with respect to the plane of the wheel and with the bits mounted therein extending out at opposite sides of the wheel, the fourth and fifth bit holders, D and E, respectively, being mounted with the central planes thereof at at a second and greater skew angle S2 (e.g., 18°) with respect to the plane of the wheel and with the respective bits extending out at opposite sides of the wheel, and with the sixth and seventh bit holders, F and G, respectively, being mounted with the central planes thereof at a third skew angle S3 which is greater than S2 (e.g., 22°) with respect to the plane of the wheel and with the respective bits extending out at opposite sides of the wheel. These values of 12°, 18° and 22° for the skew angles are preferred. It will be observed from FIG. 3 that the 22° angled bits have their cutting points located substantially outward of the planes of the side faces of the wheel or disk 5.

In operation, the trenching vehicle 1 is moved into position by means of tracks 17, the hydraulic cylinders 15 are actuated to lower the cutting implement 3 to contact the rock (or ground), and the cutting wheel 5 is driven (counterclockwise as shown in FIG. 1) by driving means 11. As the implement begins to cut, it is further lowered into the ground until the desired trench depth is attained. The trenching vehicle is then slowly moved on tracks 17 in the direction of the arrow shown in FIG. 1 to cut the trench. The speed at which the implement cuts the trench depends on the depth of the trench and the composition of the material being trenched. Typically, trenches 30 inches deep may be dug in rock formations such as limestone (dolomite) at a rate of approximately 2 feet per minute, and trenches of similar depth may be dug in frozen earth at a rate of 6 feet per minute.

As shown in FIG. 2, the cutting bits first contact the ground at the bottom of the trench and are moved upwardly toward the trenching vehicle as the wheel is rotated counterclockwise. The cutting bits break and cut the rock (or frozen earth) within the trench leaving relatively smooth trench walls, and carry the loose cuttings upwardly to be deposited on opposite sides of the trench for back-filling after the laying of the cable or pipe within the trench. A small quantity of loose rock and soil is left at the bottom of the trench to provide a smooth base for the laying of electrical cable and the like. As the cutting bits contact the rock (or soil) being cut, the bits are caused to rotate within the bit holders 7. The rotation of the cutting bits within the bit holders insures that the cutting tips 35 will wear evenly and remain sharp, thereby maintaining their cutting efficiency and extending their useful life. It has been found that the bits are more likely to rotate if the positive rake angle R is between 43° and 47° (and preferably 45° as shown).

Trench widths of approximately 4 inches may be obtained with cutting bits 9 having a maximum skew angle of 22°. If trenches substantially wider than 4 inches are desired, two or more trenching implements 3 may be mounted on shaft 19 and driven simultaneously to cut side-by-side trenches in the ground.

In view of the above, it will be seen that the several objects of the invention are achieved and other advantageous results attained.

As various changes could be made in the above constructions without departing from the scope of the invention, it is intended that all matter contained in the above description or shown in the accompanying drawings shall be interpreted as illustrative and not in a limiting sense.

What is claimed is:

1. A trenching implement comprising a wheel adapted for rotation on its axis in a cutting direction, a plurality of identical cutting bit holders secured on the periphery of the wheel spaced at intervals around the periphery of the wheel, each bit holder comprising a metal block having a base and a bore extending therethrough in the central plane of the block between its sides inclined at an angle with respect to said base, each block carrying a cutting bit having a cylindrical shank rotatable in the bore of the block, said cutting bit having a relatively hard conical outer end constituting a cutting point, means for holding the shank of each bit in the bore in its respective block while permitting the bit to rotate and to be removed from the block, the wheel being of a thickness corresponding generally to the width of a block and being of large diameter relative to said thickness, each block having its said base secured to the periphery of the wheel with the respective bit disposed at a positive rake angle in respect to the direction of rotation of the wheel, said rake angle corresponding to the angle of inclination of the bore in the block relative to the base of the block, certain blocks being secured on the periphery of the wheel with the central planes thereof generally in the plane of the wheel so as to hold the respective bits at said rake angle in the plane of the wheel, other blocks being secured on the periphery of the wheel with the central planes thereof at a skew angle with respect to the plane of the wheel in such position as to hold the respective bits at skew angles with respect to the plane of the wheel and with the respective bits extending out at one side of the wheel, and other blocks being secured on the periphery of the wheel with the central planes thereof at a skew angle with respect to the plane of the wheel in such position as to hold the respective bits at skew angles with respect to the plane of the wheel and with the respective bits extending out at the other side of the wheel, each said skew angle being the angle formed by the intersection of the plane of the wheel and the said central plane of the respective block, the latter containing the axis of the respective cutting bit and the center of the wheel, the skew angles of certain of said skew-angled bits being such that their cutting points are located outward of the sides of the wheel.

2. A trenching implement comprising a substantially solid metal disk adapted for rotation on its axis in a cutting direction, a plurality of cutting bit holders welded on the periphery of the disk spaced at intervals around the periphery of the disk, each bit holder comprising a metal block having a base and a bore extending therethrough inclined at an angle with respect to said base, each block having a cutting bit rotatable in its said bore, said cutting bit having a relatively hard conical outer end constituting a cutting point, the disk being of a thickness corresponding generally to the width of a block and being of large diameter relative to its thickness, each block having its said base welded to the periphery of the disk with the respective bit disposed at a positive rake angle in respect to the direction of rotation of the disk, certain blocks being welded on the periphery of the disk in such position as to hold the respective bits at said rake angle in the plane of the disk, other blocks being welded on the periphery of the disk in such position as to hold the respective bits at skew angles with respect to the plane of the disk and with the respective bits extending out at one side of the disk, and other blocks being welded on the periphery of the disk in such position as to hold the respective bits at skew angles with respect to the plane of the disk and with the respective bits extending out at the other side of the disk, each said skew angle being the angle formed by the intersection of the plane of the disk and the plane containing the axis of the respective cutting bit and the center of the disk, wherein each bit has a cylindrical shank rotatable in its respective block, and means for holding the shank of each bit in the bore in its respective block while permitting the bit to rotate and to be removed from the block, and wherein the blocks and bits are arranged in sets, each set comprising a first bit in the plane of the wheel, second and third bits at a first skew angle extending out at opposite sides of the wheel, and fourth and fifth bits at a second and greater skew angle extending out at opposite sides of the wheel.

3. A trenching implement as set forth in claim 2 wherein each set further comprises sixth and seventh bits extending out at opposite sides of the wheel at a third skew angle greater than the second skew angle.

4. A trenching implement as set forth in claim 3 wherein the first skew angle is about 12°, the second is about 18° and the third is about 22°.

5. A trenching implement as set forth in claim 4 wherein the rake angle is from about 43° to about 47°.

* * * * *