Oct. 6, 1936. O. SCHMIDT 2,056,212

ELECTRIC ACCORDION

Filed June 22, 1935 2 Sheets-Sheet 1

Fig. 1.

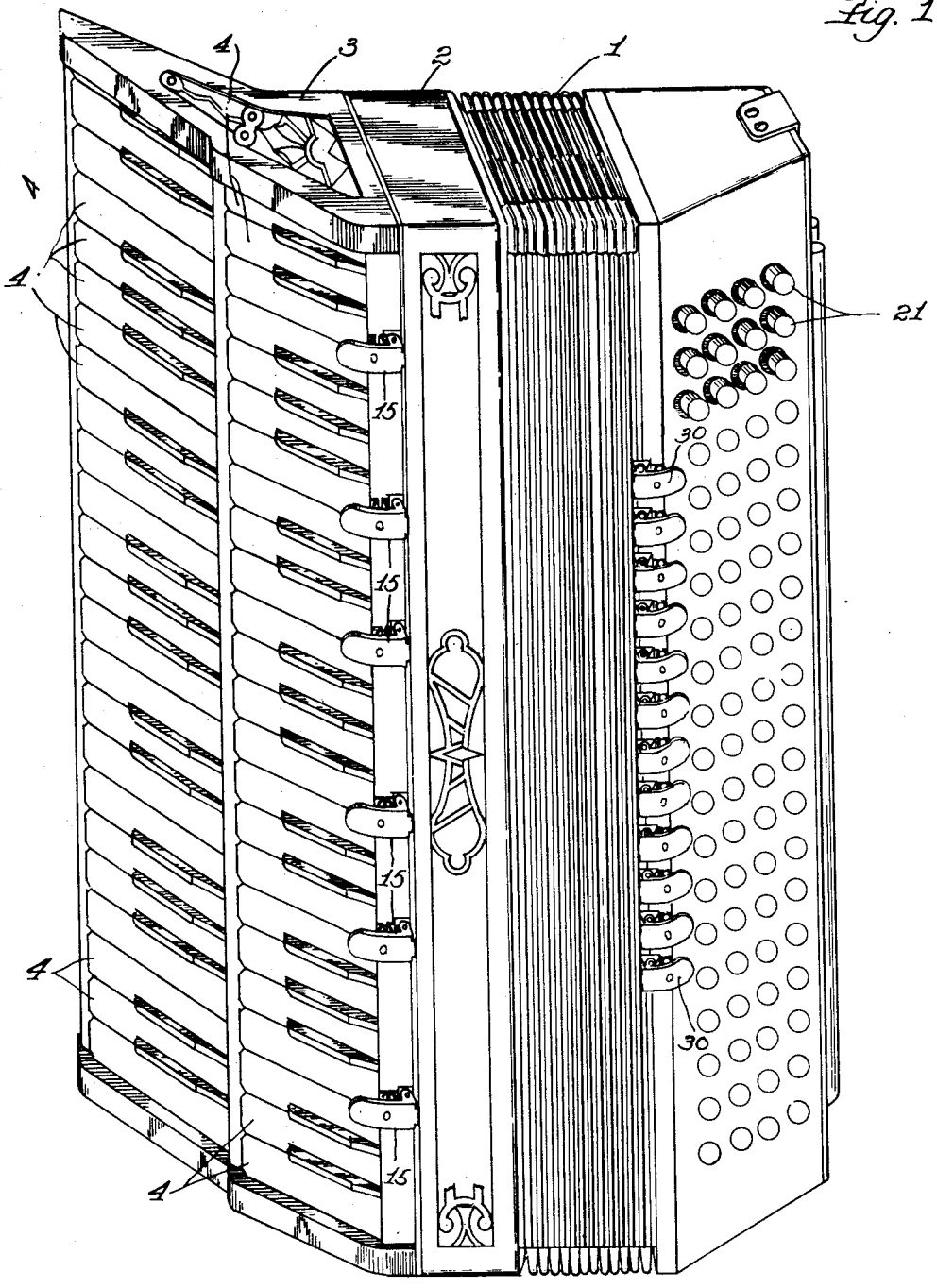

Inventor.
Otto Schmidt.
by Bowden & Bowden
his Attorneys.

Witness.
H. C. McKnight.

Oct. 6, 1936. O. SCHMIDT 2,056,212

ELECTRIC ACCORDION

Filed June 22, 1935 2 Sheets-Sheet 2

Fig. 2.

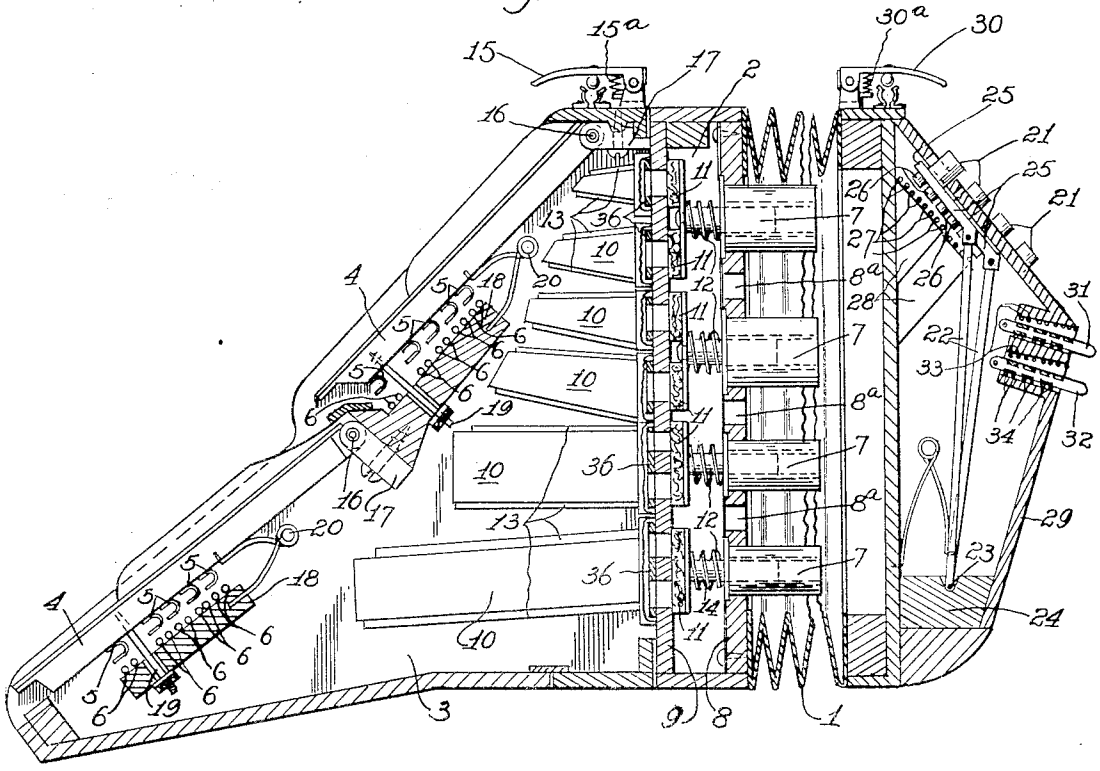

Fig 3.

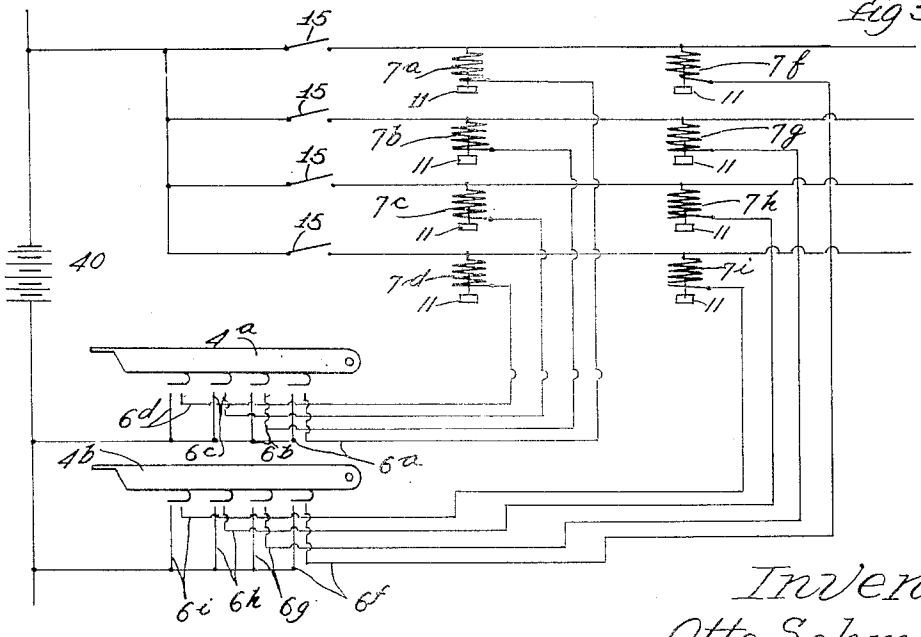

Witness.
H. T. McKnight.

Inventor.
Otto Schmidt.
by [signature]
his Attorneys.

Patented Oct. 6, 1936

2,056,212

UNITED STATES PATENT OFFICE

2,056,212

ELECTRIC ACCORDION

Otto Schmidt, De Kalb, Ill., assignor to Wurlitzer Grand Piano Company, De Kalb, Ill., a corporation of Illinois

Application June 22, 1935, Serial No. 27,828

12 Claims. (Cl. 84—376)

This invention relates to an improvement in accordions, and it is directed to means for substituting electro-magnetic actuation of the valves for direct mechanical actuation, and thus affording increased opportunity for controlling several valves simultaneously by means of a single key, and for varying the combinations of valves thus controlled and reeds thus sounded by virtue of alterations in the electrical circuits involved. The invention is thus adapted to greatly increase the range of the accordion, both in respect to pitch, and as regards the various tonal effects which can be secured. It consists in certain features and elements of construction in combination as herein shown and described, and as indicated by the claims.

In the drawings:

Figure 1 is a perspective view of an accordion embodying this invention.

Figure 2 is a transverse section indicating a typical arrangement of reed blocks with their valves and solenoids controlling them, together with keys of the treble and bass manuals and the switch devices associated with them.

Figure 3 is a wiring diagram for showing certain typical connections.

The accordion illustrated in the drawings is fairly elaborate for indicating the wide range of possibilities afforded by the present invention, but it may be understood that the invention may be applied to much simpler forms of the instrument, if desired. In Figure 1 the accordion is shown with the usual bellows, 1, to which is secured at one end a chamber, 2, occupying the usual position of the reed chest. In the present structure, however, this space is occupied by the valves which control the reeds while electro-magnetic devices for operating the valves extend into the bellows chamber, 1. The reeds themselves are disposed entirely outside the wind-chest in a chamber, 3, of approximately triangular cross-section attached to the chamber, 2. This chamber also supports the keyboard for the right hand, which, in the present design, is shown as consisting of two manuals each composed of black and white keys arranged similarly to those of a piano or organ. Referring to Figure 2, it will be seen that each of the keys, 4, carries several metallic spring contact elements, 5, each of which is disposed opposite a pair of conductors, 6, so that upon depression of the key, 4, an electric circuit, which includes the two conductors, 6, will be closed at this point. In fact, the several electric circuits, each of which is represented by one pair of conductors, 6, will be closed simultaneously.

Each of these circuits corresponds to a solenoid such as those shown at 7 in Figure 2, mounted on the wall, 8, which comprises one end of the bellows chamber, 1, the solenoids, 7, extending into said bellows chamber. Placed a short distance from the wall, 8, is a ported wall, 9, supporting the reed blocks, 10, and the wall, 8, is formed with suitable ports, 8a, to afford access of air from the bellows to the ports in the wall, 9. These ports are controlled by valves, 11, and each valve is secured to the plunger, 12, of one of the solenoids, 7, so that, when energized, the solenoid will operate to unseat the corresponding valve and permit the tension or pressure of the bellows chamber, 1, to vibrate the corresponding reeds, 13. Springs, 14, hold the valves, 11, normally seated.

It may be understood that each pair of conductors, 6, being included in the circuit of one of the solenoids, 7, for controlling a certain one of the valves, 11, is permitted such control only when the remainder of the circuit is uninterrupted. These circuits, however, may be arranged in groups with a common switch for each group, so that when such switch is opened the depression of the key, 4, will be ineffective for closing circuits of that particular group. Switches of this nature are indicated at 15, adjacent the key manual, and the relation of such switches in the solenoid circuits will be readily understood from the wiring diagram of Figure 3. Preferably, each of the switches, 15, is so designed that it will remain in closed position when tapped by the performer, so that a particular grouping of tones will remain in effect in respect to each of the keys, 4, which may be depressed as long as the switch, 15, remains closed. It may be opened at will by the player, however, and one or more of the other switches, 15, may be closed, as desired, to secure other effects in the music. Springs, 15a, serve to hold the switches yieldingly in open position.

The general mechanical arrangement of the keys, 4, is indicated in the sectional view of Figure 2. Each key is fulcrumed upon a pivot, 16, in a suitable mounting block, 17. Under the keys there extends a rail, 18, on which the terminals of the conductors, 6, are mounted, and through which an adjustable stop, 19, for each key, 4, extends. The drawings also show the individual springs, 20, for the keys anchored in the rail, 18. The rail, 18, for the upper keyboard serves as a support for the mounting blocks or "flanges", 17, of the lower keyboard.

With this arrangement it is possible to dispose all the reeds of the entire range of the instrument, that is, both treble and bass, in one group

upon the ported wall, 9; then, at the other end of the bellows, 1, I mount simply the control buttons, 21, for the bass, and the switch mechanism which they operate. Each button is carried on a long arm, 22, which is fulcrumed at 23 in a rail, 24, and adjacent the button this arm carries an insulating plate, 25, supporting metallic contacts, 26, each arranged to close the circuit between a pair of conductors, 27, which are mounted on a suitable supporting rail, 28. This mechanism is all disposed outside the bellows chamber, 1, and is enclosed within a suitably shaped wall, 29, through which the buttons, 21, project at a convenient angle for manipulation by the performer. In addition to the contacts, 26, each circuit,—which, it may be understood, controls one solenoid and its corresponding reeds,—may be interrupted by an auxiliary switch such as that indicated at 30, operating in the same manner as switches, 15, for controlling the number of circuits which will be closed upon depression of any given button, 21. Thus, the same bass button may produce a single tone, or this tone and its octave, or a full major chord or a minor chord, or the chord with the "diminished seventh", according to the particular "set-up" secured by actuation of the proper auxiliary switches, 30, before the button, 21, is depressed.

Without further detailed explanation it will be evident that the principle of operation herein described greatly expands the possibilities of the accordion, because without any additional loading of the key with extra mechanism to be actuated, it permits the performer to control simultaneously a considerable number of reeds with each key, and thus to produce a very full harmony with comparatively simple fingering of the keys themselves.

Another special advantage of the arrangement, as shown in Figure 2, is that it permits mounting the reed blocks and reeds entirely outside the bellows chamber, whereas, heretofore, it has been almost impossible to do this when the valves were operated by direct mechanical connection to the keys. The reeds in my construction are thus subject to atmospheric pressure at all times, instead of being confined in a chamber which is under pressure part of the time, and subject to partial vacuum at other times, as caused by the operation of the bellows. With my arrangement the resulting tones produced by the reeds are much more uniform and satisfactory, both in pitch and in quality.

The electrical energy for operating the solenoids may be supplied by a battery or other convenient source with which the instrument will be connected by a suitable conductor cable with detachable coupling means, neither the cable nor the coupling being shown in the drawings since they may be of any standard construction. In Figure 3 the source of energy is indicated as a battery, 40, from one terminal of which a lead wire connects with one of each pair of the conductors, 6; the other conductor of each pair extends to one of the solenoid coils, 7, and thence the circuit leads back to the battery through one of the switches, 15. In Figure 3 I have shown four solenoids, designated as 7^a, 7^b, 7^c and 7^d, arranged in a row. One of the conductors, 6^a, connects with the solenoid, 7^a, one of the conductors 6^b, connects with the solenoid, 7^b, and so forth. The manual key, 4^a, closes all four circuits, 6^a, 6^b, 6^c, and 6^d. But each circuit includes, in its return wire, one of the switches, 15, and will be ineffective unless this switch is closed. A second row of solenoids 7^f, 7^g, 7^h, and 7^i, is shown with circuit wires, 6^f, 6^g, 6^h, and 6^i, connected to them respectively and extending from the manual key, 4^b. The solenoids, 7^a and 7^f, are both connected to the battery through the same switch, 15. If this switch is closed, then, upon depression of key, 4^a, the solenoid, 7^a, will operate, and upon depression of key, 4^b, the solenoid, 7^f, will operate. If another one of the switches, 15, is also closed, say, the one in circuit with solenoids, 7^b and 7^g, then both solenoids, 7^a and 7^b, will operate simultaneously when key, 4^a, is depressed; and both solenoids, 7^f and 7^g, will operate upon actuation of key, 4^b. It will be understood, of course, that each switch, 15, is in the return circuit of a whole group of solenoids, of which 7^a and 7^f, or 7^b and 7^g, are merely typical.

In connection with the operation of the bass, and in addition to the switches, 30, there may be other special switching means for arranging the groups of reeds which will be sounded by any one of the buttons, 21. Figure 2 shows two rockable switch members, 31 and 32, each carrying metallic contact members, 34, adapted for connecting in pairs the conductors, 33, which are disposed at both sides of the members, 31 and 32, so that the latter will alternately provide one of two arrangements of circuits.

In addition to the variations in the circuit connections which may be made by virtue of switches, 15, 30, 31 and 32, my construction admits of the use of the usual slidable shutter valves, 36, by which certain of the ports controlled by the valves, 11, may be closed independently of said valves, thus temporarily eliminating certain of the reeds from the harmony.

While I have not attempted to show or describe all the separate parts and members of my structure in detail, and while the drawings show some elements more or less diagrammatically, it will be seen that I have devised an arrangement of mechanism and a principle of operation by which the player is given control of a greatly increased number of reeds, and of a much wider tonal range than he has had heretofore in the accordion, and that the musical possibilities of the instrument have been greatly enhanced. While there is shown and described herein certain specific structure embodying the invention, it will be manifest to those skilled in the art that various modifications and re-arrangements of the parts may be made without departing from the spirit and the scope of the invention, and that the same is not limited to the particular form herein shown and described, except in so far as indicated by the appended claims.

I claim:

1. In an accordion, a reed block with reeds thereon, a valve controlling the flow of air for vibrating one of said reeds, electro-magnetic means for operating said valve, a source of electrical energy, a keyboard including a key corresponding to the said reed, a switch device actuated by the key, and electrical conductors completing a circuit which includes the energy source, the switch device and electro-magnetic means, whereby the key controls the operation of said valve.

2. In an accordion, a reed block with reeds thereon, a valve controlling the flow of air for vibrating one of said reeds, a solenoid connected for opening said valve, a spring arranged to close the valve, a source of electrical energy, a keyboard including a key corresponding to the said reed, a switch device actuated by the key, and

electrical conductors completing a circuit which includes the energy source, the switch device and the solenoid, whereby the key controls the operation of said valve.

3. In an accordion, a reed block with reeds thereon, a valve controlling the flow of air for vibrating a selected reed or reeds, electro-magnetic means for operating said valve, a source of electrical energy, a keyboard including a key corresponding to the said reed or reeds, a switch device actuated by the key, and electrical conductors completing a circuit which includes the energy source, the switch device and the electromagnetic means, together with a second switch in the circuit adapted to be set at will for closing or opening the circuit so as to render the operation of the key effective or ineffective to actuate said valve.

4. In an accordion, a reed block with reeds thereon, valves controlling the flow of air for vibrating said reeds selectively, electro-magnetic means for operating each valve, a source of electrical energy, a keyboard including keys corresponding to the reeds respectively, a plurality of switch devices associated with each key to be actuated thereby, and electrical conductors completing circuits between said switch devices and the several electro-magnetic means arranged to permit said keys to control the simultaneous operation of several valves in predetermined groupings.

5. In an accordion, a bellows, a reed chamber with a set of reeds mounted therein, a ported wall between the reed chamber and the bellows and valves controlling the ports, together with electro-magnetic means accommodated in the bellows chamber and connected to said valves for operating them.

6. In an accordion, a bellows, a reed chamber with a set of reeds mounted therein, a ported wall between the reed chamber and the bellows, valves controlling the ports, electro-magnetic means connected to said valves for operating them, and manual keys mounted on the reed chamber with electrical switch devices actuated by said keys for operating the valves respectively.

7. In an accordion, a bellows, a reed chamber with a set of reeds mounted therein, a ported wall between the reed chamber and the bellows chamber, valves controlling the ports of said wall arranged to open toward the bellows, electro-magnetic means accommodated in the bellows chamber and connected to said valves for operating them, together with manual keys mounted on the reed chamber and electrical switch devices associated with said keys for actuation thereby to operate the respective valves.

8. In an accordion, a bellows, a reed chamber with a set of reeds mounted therein, a ported wall between one end of the bellows and the reed chamber, and valves controlling the ports of said wall, together with electro-magnetic means connected to said valves for operating them, and manually operable keys disposed at both ends of the bellows and connected with said electro-magnetic means for energizing them selectively at will.

9. In an accordion, a bellows, a reed chamber with a set of reeds mounted therein, a ported wall controlling the flow of air between the reed chamber and the bellows chamber with valves for the respective ports, and a solenoid arranged for actuating each valve, together with manual keys and a plurality of electrical switch devices disposed for simultaneous actuation by each of said keys connected for operating a plurality of the valves and sounding the corresponding reeds simultaneously, together with means adjustable at will for rendering certain of said switch devices temporarily ineffective.

10. In an accordion, a bellows, a wall adjacent one end of the bellows, a reed block with a set of reeds mounted upon said wall at the side opposite that from which the bellows extends, ports through said wall leading to the respective reeds of the block; and valves for the respective ports operable selectively at will for sounding the corresponding reeds.

11. In an accordion, a bellows, a wall adjacent one end of the bellows, a reed block with a set of reeds mounted upon said wall at the side opposite that from which the bellows extends and in a space constantly subject to atmospheric pressure, ports through said wall leading to the respective reeds of the block; and valves for the respective ports operable selectively at will for subjecting the corresponding reeds to the bellows pressure or suction for sounding them.

12. In an accordion, a bellows, a wall adjacent one end of the bellows, a reed block with a set of reeds mounted upon said wall at the side opposite that from which the bellows extends, ports through said wall leading to the respective reeds of the block; valves for the respective ports with individual electrically actuated devices for the respective valves disposed at the side of the wall from which the bellows extends and operable selectively at will for sounding the corresponding reeds.

OTTO SCHMIDT.