Jan. 5, 1926. 1,568,727

J. J. FRANK

CORRUGATED SHEET METAL CASING

Filed Feb. 2, 1925

Fig. 1.

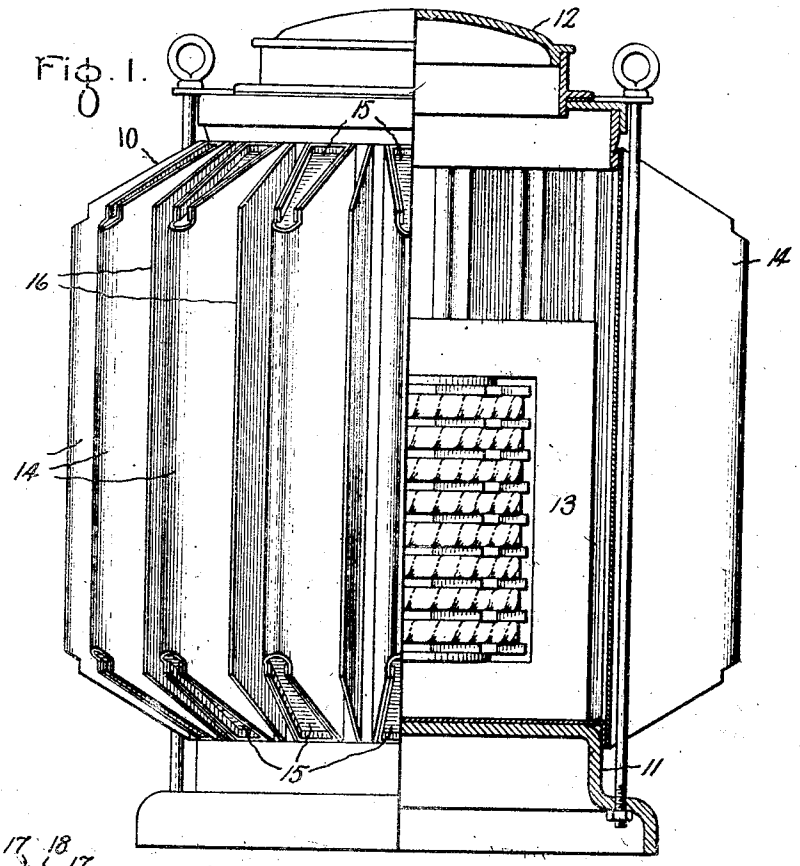

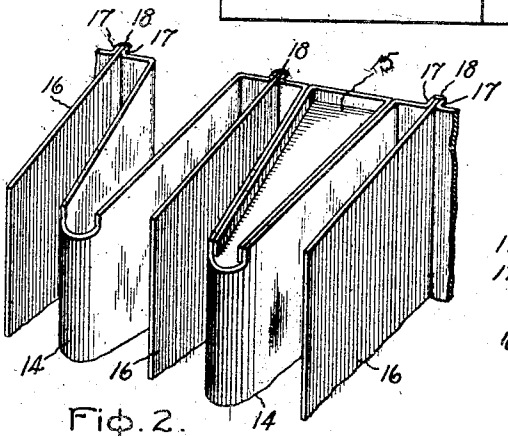

Fig. 2.

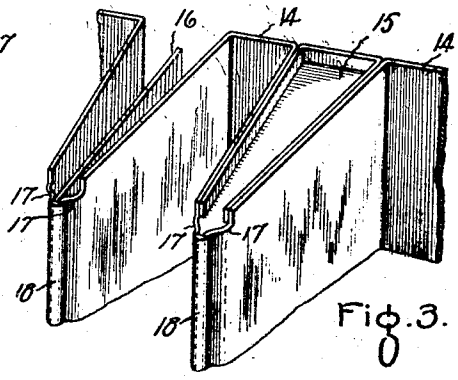

Fig. 3.

Inventor:
John J. Frank,
by Alexander S. Lamb
His Attorney.

Patented Jan. 5, 1926. 1,568,727

UNITED STATES PATENT OFFICE.

JOHN J. FRANK, OF PITTSFIELD, MASSACHUSETTS, ASSIGNOR TO GENERAL ELECTRIC COMPANY, A CORPORATION OF NEW YORK.

CORRUGATED SHEET-METAL CASING.

Application filed February 2, 1925. Serial No. 6,180.

To all whom it may concern:

Be it known that I, JOHN J. FRANK, a citizen of the United States, residing at Pittsfield, in the county of Berkshire, State of Massachusetts, have invented certain new and useful Improvements in Corrugated Sheet-Metal Casings, of which the following is a specification.

My invention relates to corrugated sheet metal casings for oil immersed transformers. The electrical losses in a transformer appear as heat which causes an increase in the temperature of the windings, insulation and other parts of the transformer and these losses and therefore the temperature of parts of the transformer increase with the load. The load capacity of a transformer is therefore limited by the temperature which cannot be permitted to exceed a safe maximum value without danger of injury to the transformer. The load capacity may be increased, however, without increasing the temperature if some provision is made for increasing the rate at which the heat is dissipated from the transformer. This result is often attained by corrugating the wall of the enclosing casing of the transformer so that the surface of the wall which is exposed to the surrounding air is increased. The general object of the present invention is to provide a corrugated transformer casing wall with heat conducting fins or plates located between the sides of the corrugations whereby the rate of heat dissipation from the casing to the surrounding air is still further increased. By disposing these fins between the sides of the corrugations, the fins need not and preferably do not extend beyond the outer or inner contour of the corrugated wall either to increase the floor space required for the casing or to decrease the space within the casing occupied by the apparatus which it encloses. A further object of the invention is to provide strong heat conducting joints between the fins and the corrugated casing wall.

Other objects and advantages will appear from the following description taken in connection with the accompanying drawing in which Fig. 1 shows a transformer with a casing constructed in accordance with the invention, a portion of the casing being broken away to show the transformer; Fig. 2 is a detail perspective view of a portion of the casing wall shown in Fig. 1; and Fig. 3 is a detail perspective view of a portion of a modified form of casing wall.

Like reference characters indicate similar parts in the different figures of the drawing.

The particular form of casing shown in Figs. 1 and 2 comprises a sheet metal wall 10 with a base 11 and cover 12 and is adapted to hold a body of suitable insulating and cooling oil in which a transformer 13 is immersed. The wall 10 is corrugated, the ends of the internal spaces between the sides of the corrugations 14 being closed by end pieces 15. Heat conducting fins or plates 16 are disposed in the external spaces between the sides of the corrugations 14 and their inner edges are connected, preferably by welding, to the casing wall so that the connections may have good heat conductivity. Thus, heat may flow readily from inside the casing to the corrugated casing wall and thence out into the fins to be dissipated into the surrounding air. This is in addition, of course, to the heat which is dissipated directly to the surrounding air from the surfaces of the corrugations. The width of the fins 16 is preferably such that they do not extend beyond the general outer contour of the corrugated wall so that they are protected by the corrugations and do not increase the floor space required for the casing.

In accordance with a further feature of the invention, the casing wall 10 is built up of sections, each section preferably comprising a single corrugation 14. At each joint where the edges of adjacent wall sections or corrugations 14 are joined together, the two narrow edge portions 17 of the corrugations are bent into substantially parallel planes and one edge of one of the heat radiating plates or fins 16 is interposed between them as indicated most clearly in Fig. 2, each plate or fin 16 projecting out into the space between the adjacent corrugations 14. The inner edge portion of each fin 16 and the two edge portions 17 of the adjacent corrugations are in substantially parallel planes and the three edge portions are united by a weld 18 to form a tight joint. The three edges are of course, substantially flush at the weld.

The welds 18 provide solid metallic connections between the fins 16 and the adjacent edge portions 17 of the sections or corru-

gations 14 of the casing wall so that there is good heat conductivity between the wall sections and fins. Heat generated in the transformer during its operation is absorbed by insulating and cooling oil in which the transformer is immersed. Convection currents in this oil transfer this heat to the casing through which it passes and whence it is then dissipated to the surrounding air. The projecting sections or corrugations 14 of the casing wall increase materially the surface of casing wall exposed to the surrounding air and therefore the rate of heat dissipation. The plates or fins 16 provided in accordance with the invention still further increase the surface exposed to the surrounding air and therefore still further increase the rate of heat radiation. The good heat conductivity between the inner edges of the fins 16 and the adjacent portions of the wall sections 14 permits heat to flow readily from the wall sections out into the fins 17 whence it is dissipated to the surrounding air. The inner edge portion of each fin 16 interposed between the slightly separated edge portions 17 of the adjacent wall sections furnishes additional metal for the weld 18 and thus contributes to the strength and tightness of the joint. A further advantage of this arrangement of the fins 16 is that heat may flow directly to them from the oil or other medium in which the transformer is immersed and without passing through the wall sections.

A modified form of the invention is shown in Fig. 3 in which the rate of heat radiation is increased by arranging the fins 16 to project from the joints between the wall sections 14 inwardly into the oil in which the transformer is immersed rather than outwardly into the air outside the casing. The wall sections 14 here are in the form of internal corrugations, the edge portions 17 of which are bent into substantially parallel planes. The outer edge portion of each fin 16 is interposed between the slightly separated edge portions 17 of the adjacent corrugations and the three edges are joined by a weld 18. The fins 16 extend from the welds 18 inwardly into the oil between adjacent wall sections. With this construction, heat from the oil may flow readily into the fins 16 and thence to the welds 18 and the adjacent portions of the wall sections or corrugations 14 whence it is dissipated to the surrounding air. The ends of the internal spaces between the wall sections 14 are closed by suitable end pieces 15. In either form of the invention which has been described, the fins 16 are disposed in the spaces between the sides of the corrugations 14 so as not to project beyond the outer or inner contour of the casing wall.

What I claim as new and desire to secure by Letters Patent of the United States, is,—

1. A casing for electrical apparatus, the wall of said casing being formed of corrugations, and heat conducting fins disposed in the spaces between the sides of said corrugations and between the general inner and outer contours of said corrugated wall, said fins each having an edge connected to said casing wall by a joint having good heat conductivity.

2. A casing for electrical apparatus, the wall of said casing being formed of slightly separated sheet metal corrugated sections, and sheet metal heat conducting fins interposed between the adjoining edges of said wall sections, each of said fins being joined to the adjacent wall sections by a metallic weld.

3. A casing for electrical apparatus, the wall of said casing being formed of sheet metal corrugated sections, each two adjacent wall sections having their adjoining edge portions disposed in substantially parallel planes and slightly separated, and sheet metal heat conducting fins interposed between said edge portions of the wall sections, each of said fins being joined to the adjacent parallel wall edge portions by a metallic weld.

4. A casing for electrical apparatus, the wall of said casing being formed of sheet metal corrugated sections, each two adjacent wall sections having their adjoining edge portions disposed in substantially parallel planes and slightly separated, and sheet metal heat conducting fins interposed between said edge portions of the wall sections, each of said fins having an edge portion substantially flush with and welded to the adjoining edge portions of the adjacent wall sections.

5. A casing for electrical apparatus, the wall of said casing being formed of sheet metal corrugated section, each two adjacent wall sections having their adjoining edge portions disposed in substantially parallel planes and slightly separated, and sheet metal heat conducting fins interposed between said edge portions of the wall sections, each of said fins being joined to the adjacent parallel wall edge portions by a metallic weld and extending into the space between the adjacent corrugated wall sections.

In witness whereof, I have hereunto set my hand this 30th day of January, 1925.

JOHN J. FRANK.