United States Patent [19]

Goldsworthy et al.

[11] **3,713,572**

[45] **Jan. 30, 1973**

[54] MATERIAL FEEDING SYSTEM

[75] Inventors: **William B. Goldsworthy,** Palos Verdes Estates; **Ethridge E. Hardesty,** Pine Valley, both of Calif.

[73] Assignee: **Goldsworthy Engineering, Inc.,** Torrance, Calif.

[22] Filed: **Feb. 3, 1971**

[21] Appl. No.: **112,162**

[52] **U.S. Cl.** **226/7,** 226/97

[51] **Int. Cl.** **B65h 25/06**

[58] **Field of Search**....226/97, 7; 242/47; 139/1, 127 P; 66/125, 132

[56] **References Cited**

UNITED STATES PATENTS

3,559,860	2/1971	East et al.	226/97
3,327,499	6/1967	Schmidt et al.	66/132

Primary Examiner—Allen N. Knowles
Assistant Examiner—Gene A. Church
Attorney—Robert J. Schaap, Neal E. Willis and John D. Upham

[57] **ABSTRACT**

A method and apparatus for feeding textile roving strands and the like through one or more feeding tubes by means of an air vehicle. The textile strands are introduced into filament guides and pulled through the filament guides by means of air under pressure. A discharge aperture on each of the filament guides is located in a venturi throat where air picks up the filament strands and carries them into delivery tubes. This same educted air from the venturi throat is used to transport the strands over considerable distance in such delivery tubes. A pair of metering rollers controls the rate of strand delivery to the filament guides. Inasmuch as there is an air boundary layer existing between the interior wall of the tube and the exterior wall of the glass, the abrading effect is very substantially reduced. A control mechanism regulates the operation of the metering rollers, and hence the feeding of the strands with respect to a demand on the strand. In addition, a second embodiment of the invention discloses a reciprocation of the feeding mechanism in timed relation to the metering of the strands through the feeding mechanism and in timed relation to the demand for the strands.

18 Claims, 5 Drawing Figures

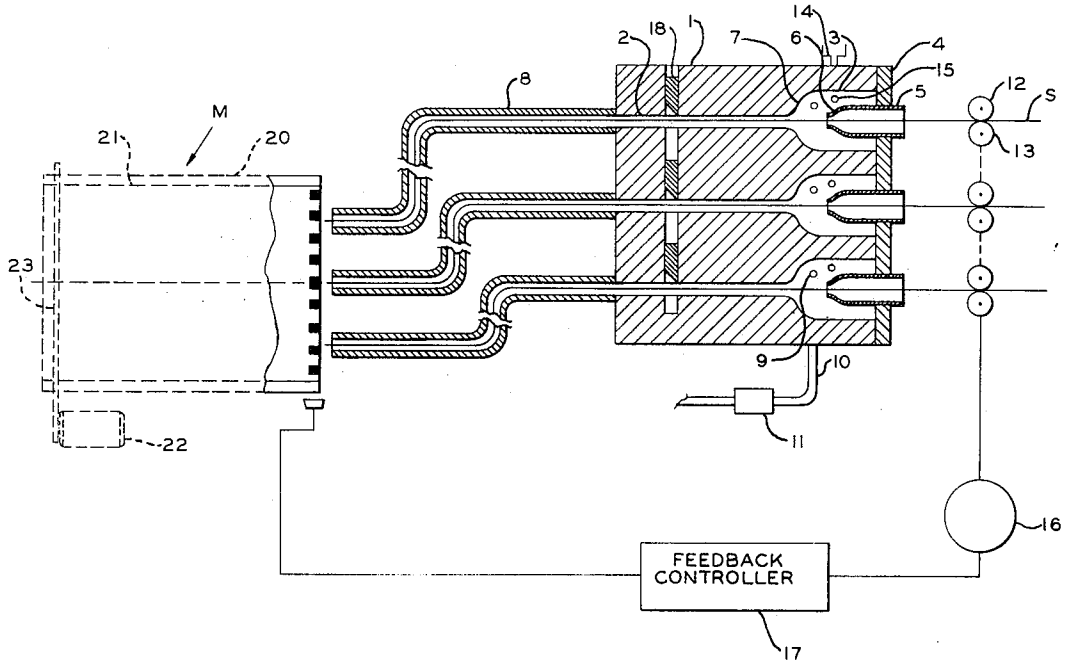

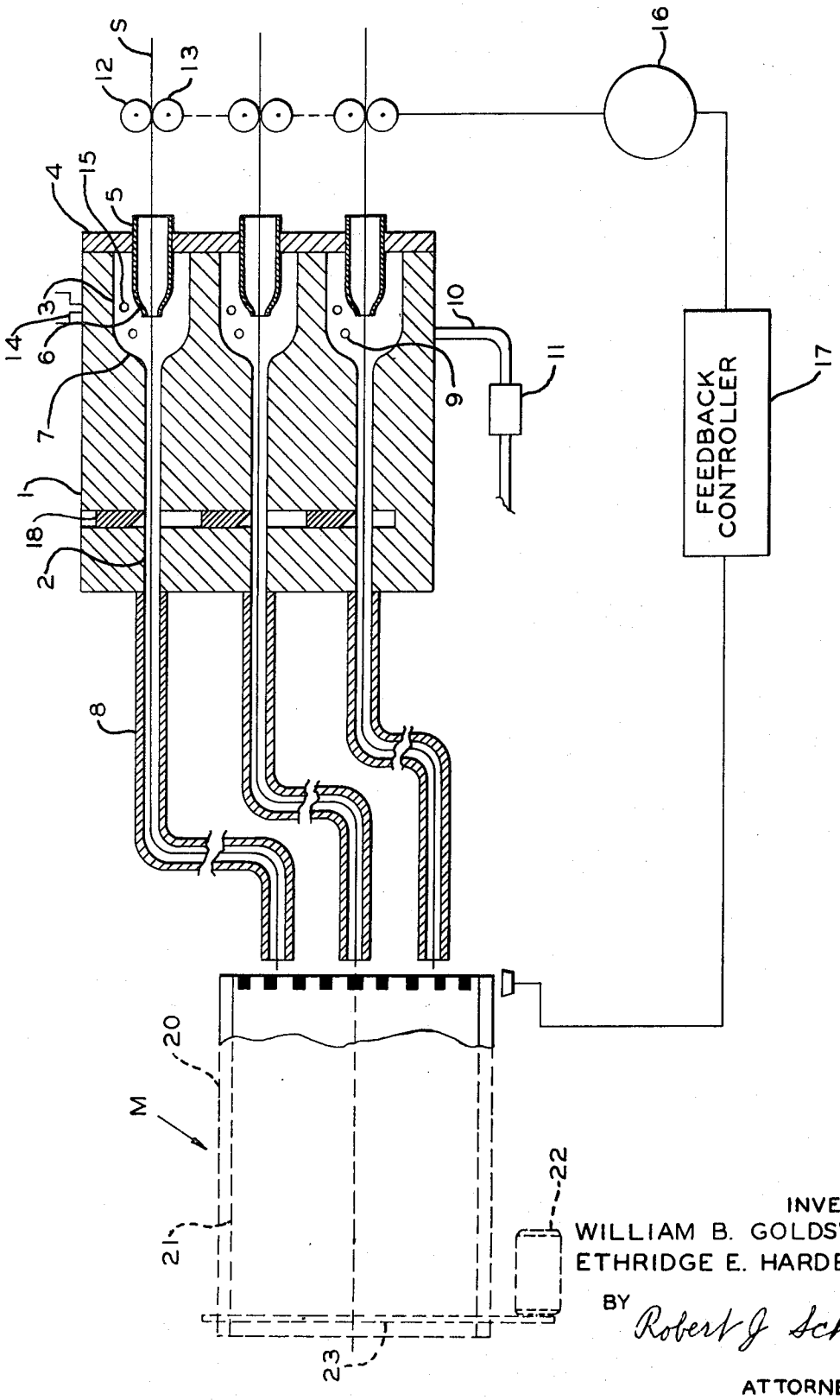

FIG. 1

INVENTORS
WILLIAM B. GOLDSWORTHY
ETHRIDGE E. HARDESTY
BY Robert J Schaap
ATTORNEY

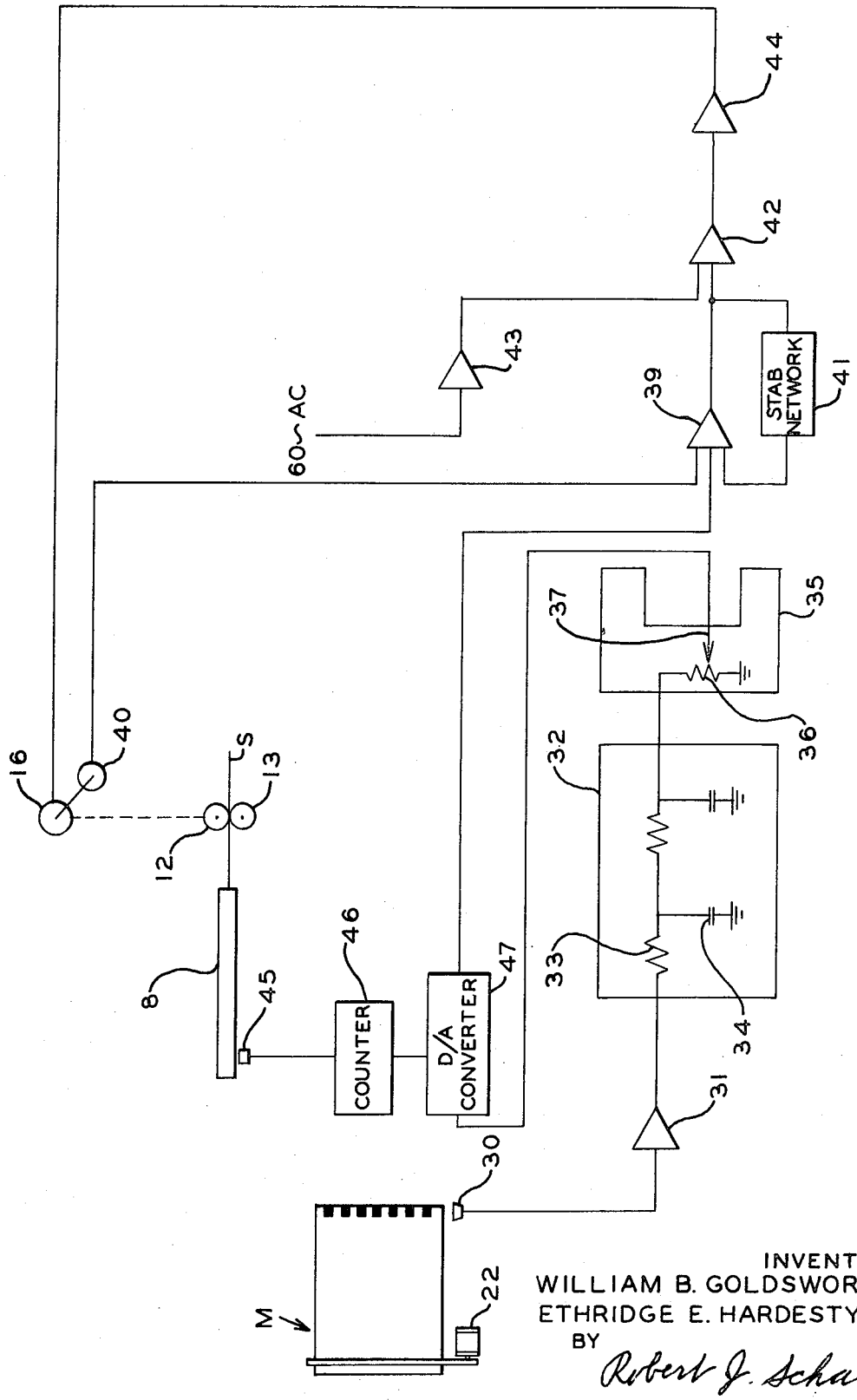

FIG. 2

INVENTORS
WILLIAM B. GOLDSWORTHY
ETHRIDGE E. HARDESTY
BY
Robert J. Schaap
ATTORNEY

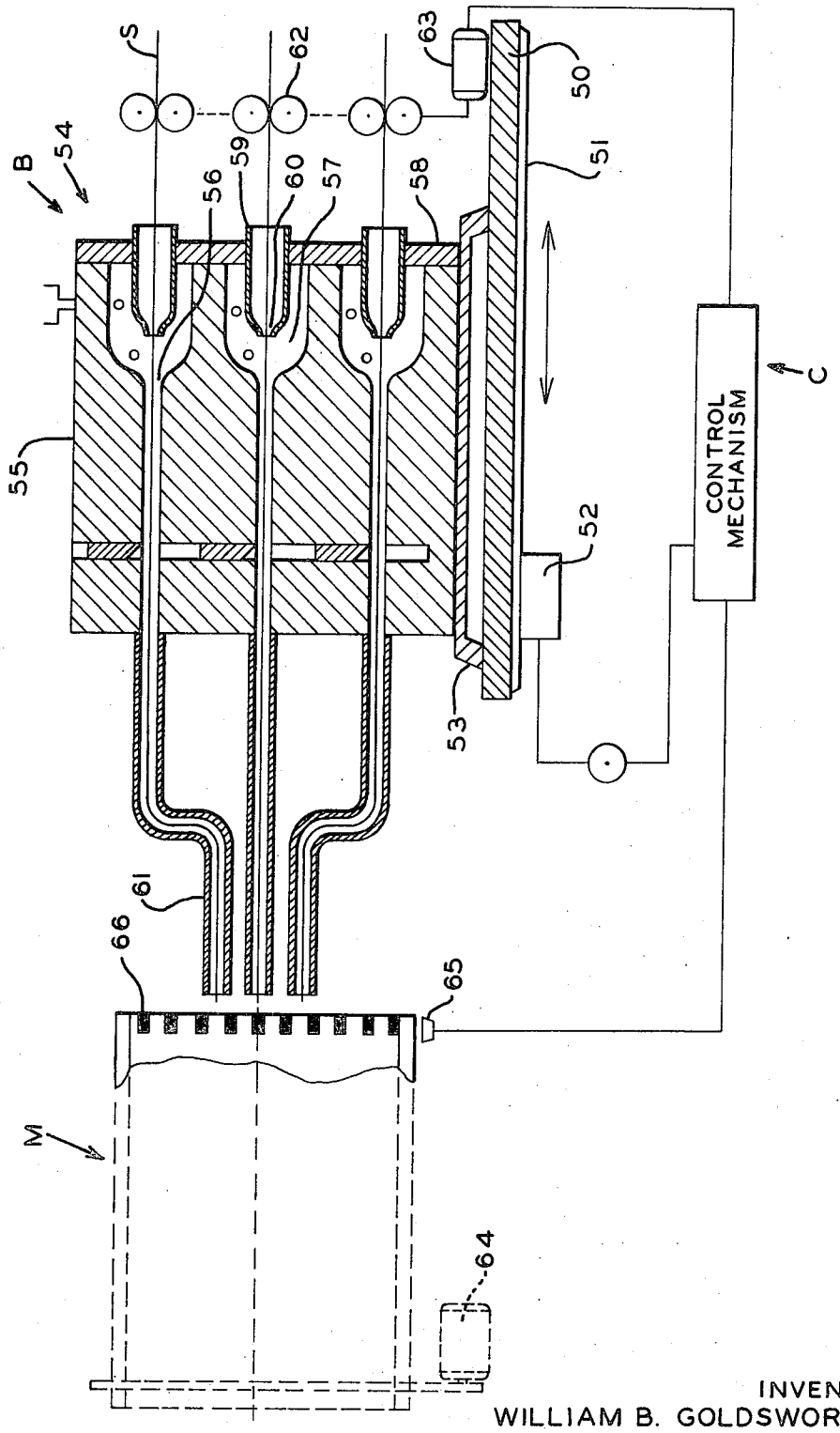

FIG. 3

INVENTORS
WILLIAM B. GOLDSWORTHY
ETHRIDGE E. HARDESTY
BY Robert J. Schaap
ATTORNEY

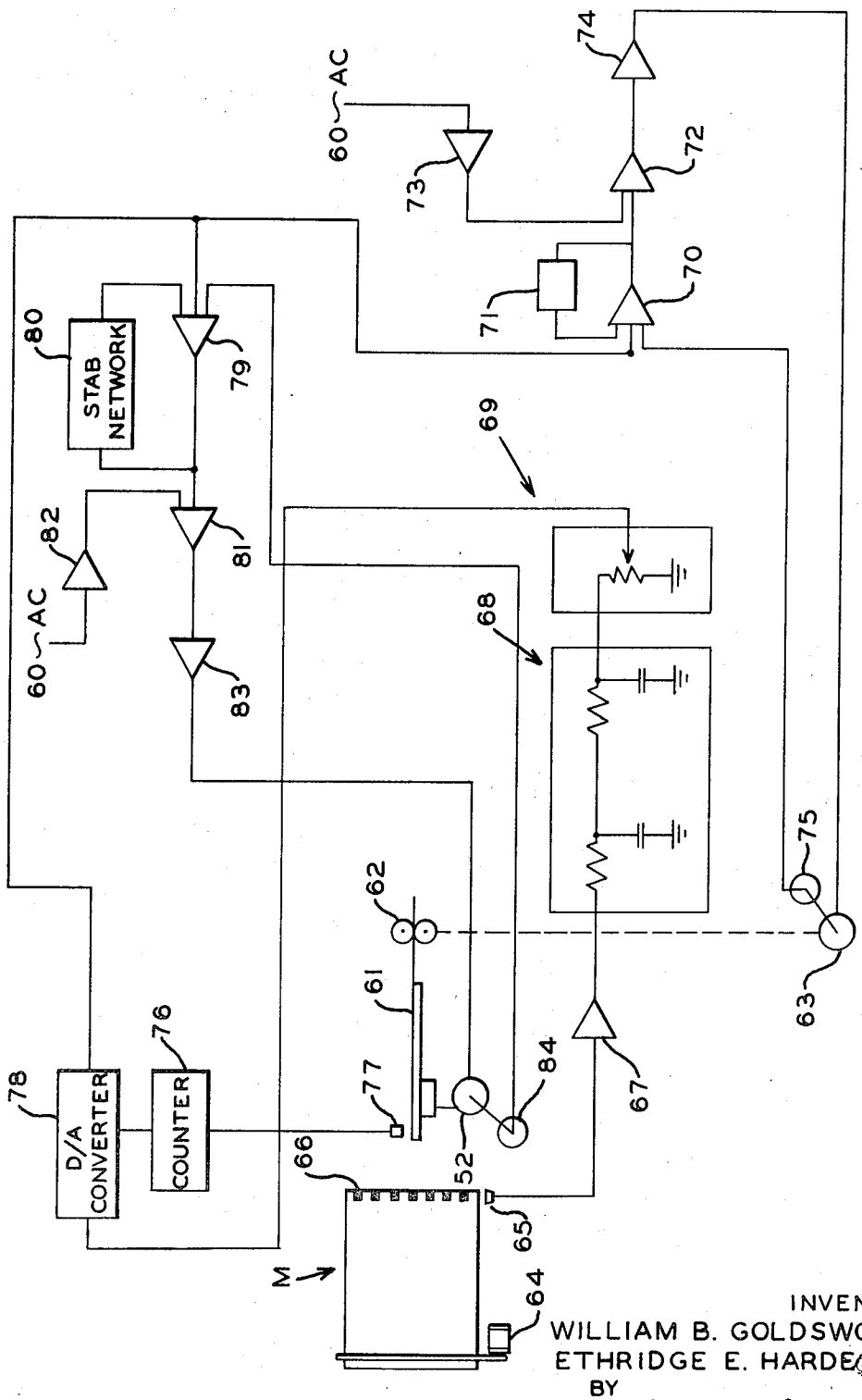

FIG. 4

INVENTORS
WILLIAM B. GOLDSWORTHY
ETHRIDGE E. HARDESTY
BY
Robert J. Schaap
ATTORNEY

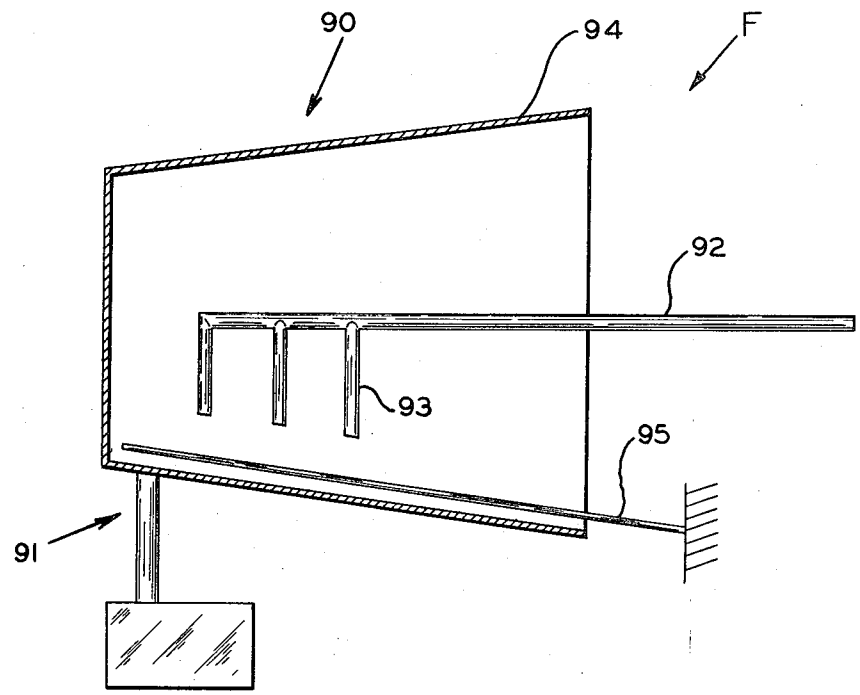

FIG. 5

INVENTORS
WILLIAM B. GOLDSWORTHY
ETHRIDGE E. HARDESTY

BY Robert J. Schaap

ATTORNEY

MATERIAL FEEDING SYSTEM

This invention relates in general to certain new and useful improvements in filament feeding system, and more particularly to filament feeding systems which employ an air vehicle as the moving medium.

In recent years reinforced plastics have achieved increasing prominence and have found applications in many areas which were previously satisfied by products fabricated from the heavy metals. For example, many users of storage tanks and the like have begun to resort to employment of reinforced plastic tanks as opposed to metal tanks since the former are less costly in many cases and are able to withstand abrasion and corrosion effects materially greater than metal tanks.

Many of the reinforced plastic products are formed by filament winding techniques which call for large demands of the reinforced filament material. Fiberglass filament strands are one of the pronounced reinforcing materials used in the preparation of tanks and the like. However, delivery of fiberglass to feeding heads or glass applicators requires careful handling and specialized equipment. The glass must be capable of being applied to a mandrel, die or the like, without being marred or abraded by a delivery mechanism. Typically, fiberglass strands are very easily abraded when in contact with any hard surface. When the fiberglass becomes abraded, the resultant product which employs the glass will have unsightly scars. These scars are not only aesthetically undesirable, but also produce structurally inferior areas in the product.

The present invention resides in a discovery that it is possible to transport abrasion-sensitive filaments for substantially long distances in an air vehicle at a rate consistent with the demand of such filaments. The prior art teaches of venturi type devices (employing either an eductor or aspirator) for purposes of pulling strands of fibrous materials. For example, U.S. Pat. Nos. 2,859,506, 2,852,906, and 2,693,844 all teach of air feeding systems which are designed to pull filamentary materials such as fiberglass. However, the devices of each of these patents operate on the basis of a "venturi-actuated aspirator."

It is, therefore, the primary object of the present invention to provide a filament feeding system which is capable of carrying fiberglass strands in a stream of air.

It is a further object of the present invention to provide a filament feeding system of the type stated which is capable of carrying filamentary strands in an air vehicle and preventing contact of the strand with a delivery tube by means of an air boundary interface existing between the delivery tube and the strand.

It is another object of the present invention to provide a filament feeding system of the type stated in which the rate of strand delivery is programmed with respect to a device calling for a supply of the filamentary strands and which is also programmed to compensate for changes in the effective rate of strand delivery resulting from previous deposition of the strands.

It is an additional object of the present invention to provide a system of the type stated which can be manufactured on a low unit cost basis and which is highly efficient in its operation.

With the above and other objects in view, our invention resides in the novel features of form, construction, arrangement and combination of parts presently described and pointed out in the claims.

In the accompanying drawings (5 sheets):

FIG. 1 is a schematic vertical sectional view illustrating a filament delivery system constructed in accordance with and embodying the present invention;

FIG. 2 is a schematic view of the electrical circuitry forming part of the feedback controller of FIG. 1;

FIG. 3 is a schematic vertical sectional view of a modified form of filament delivery system constructed in accordance with and embodying the present invention;

FIG. 4 is a schematic view of the electrical circuitry which forms the control mechanism for the filament delivery mechanism of FIG. 3; and

FIG. 5 is a schematic view of a modified form of filament delivery system constructed in accordance with and embodying the present invention.

Referring now in more detail and by reference characters to the drawings which illustrate a preferred embodiment of the present invention, A designates a filament feeding system comprising a manifold 1 which is internally drilled to form three horizontally extending vertically aligned fluid ducts 2. Each of the fluid ducts 2 is diametrally enlarged at its right hand end in the form of an air chamber 3. A back plate 4 is secured to the manifold 1 by means of any suitable fasteners (now shown) in order to enclose each of the air chambers 3.

The back plate 4 is apertured in the area of each of the air chambers 3 to accommodate a filament guide 5 which extends into the air chamber 3. Each filament guide 5 terminates at its left hand end in the provision of a discharge aperture 6 through which filamentary materials may pass. It should be observed that the discharge aperture 6 is located in a venturi throat 7; that is in an area where the air chamber 3 integrally merges into the diametrally reduced duct 2. By reference to FIG. 1, it can be seen that filament strands S are introduced into each of the filament guides 5 and carried through the discharge aperture 6 into the ducts 2.

As indicated previously, the various prior art devices employ some form of venturi-actuated aspirator. The present invention also continues to employ the educted air from the aspirator for transporting the filament strands S for substantially long distances inside of tubing. In addition, the present invention provides a mechanism of metering the filament strands in such fashion that the supply of the strands is predictable and controllable.

Connected to each of the ducts 2 are filament delivery tubes 8 which carry the glass strands from the filament guides 5 to the area of demand (hereinafter described). An air inlet aperture 9 connects with each of the chambers 3 and the chambers 3 receive air under pressure through an air supply tube 10 connected to each of the inlet apertures 9. The air supply tube 10 is connected to any suitable source of air under pressure (now shown) through a conventional regulator valve 11.

The devices of the prior art operate on the so-called "short-jet" principle in that these devices employ a venturi-aspirator to pull strands for relatively short distances. The present invention differs considerably in that the invention provides a mechanism for transporting these filaments to a delivery tube 8 for substantially long distances. For example, it has been found possible to transport fiberglass strands through delivery tubes 8

for distances of 25 feet and greater. Furthermore, inasmuch as the fiberglass is carried in an air stream, the moving air serves as a dynamic boundary layer which acts as a protective sheath around the strands to prevent damage to the abrasive-sensitive filaments.

A pair of metering rollers **12,13** are located at the entrance of each of the filament guides **5** for metering the glass strands S to each of the guides **5**. The metering rollers **12,13** receive the glass strands from a creel supporting platform or other supply source (not shown) and feed the glass to the guides **5** in timed relationship to the demand for the glass strands S. The metering rollers **12,13** are programmed to operate at a speed proportional to the demand of the strands S in a manner to be hereinafter described in more detail.

In many cases, it is oftentimes desirable to add a particulate matter such as sand or the like to the strand material. The present invention readily lends itself to a convenient mixing of the sand with the filamentary strands and delivery of the particulate matter along with the roving strand in the air stream. It has been found that delivery of the particulate matter along with the strand material, and direct application simultaneously of the strand and particulate matter has been highly effective in the fabrication of many reinforced plastic composite structures. For this purpose, a discharge tank **14** is connected to the manifold **1** and communicates with each of the air chambers **3** through ducts **15** which terminate in inlet apertures in the respective chambers **3**. The particulate matter is then metered into the chambers **3** through the ducts **15**. Preferably, the discharge tank **14** is provided with metering rollers, agitators, or other mechanism which will provide for the delivery of a proper amount of the particulate matter to the air chambers **3**.

There are a number of particulate materials which can be employed in the feeding system of the present invention in addition to sand. Many of the other materials which may be used are particulate silica, small hollow spheres of various materials and carbon and graphite. The present invention is adapted to handle a wide variety of particle sizes of the particulate matter and can handle large particles in the range of 8 to 64 mesh and small particles in the range of 100 mesh to 5 microns. Furthermore, the amount of particulate matter can be programmed to the amount of strand delivery.

For the purpose of describing the controlled feed of the strands S, a cylindrical mold M has been shown in dotted lines in FIG. **1**. The mold essentially consists of an open ended shell having an annular wall **20** with an interior strand-receiving surface **21**. The mold is rotated about its central longitudinal axis by means of a conventional electric motor **22** and conventional drive mechanism **23**. When the motor **22** is energized, the drive mechanism **23** will rotate the mold M about its central longitudinal axis at the desired speed of rotation. The various filament delivery tubes would be provided with feeding heads (not shown) to extend through the open transverse end of the shell wall **20** and into the interior of the mold. As the mold is rotated, filament strands S will be applied to the interior surface **21**.

In the fabrication of tubular structures, for example, it is important, and in many cases even critical, to deliver the strands at a feed-in rate which must be matched exactly to the peripheral speed of the mold. In other words, the line rate in feet per minute must be exactly equal to the mold surface rotational speed in terms of feet per minute. Typically, in the fabricating of such tubular structures, the strands must be laid in a truly contiguous pattern so that a series of side-by-side circumferential strands abut each other to form a relatively smooth annular fiberglass structure. Quite obviously, a slight variance in the feed-in rate with respect to the peripheral speed in the mold would break the continuity of the strand application to the interior surface of the mold.

In addition to the proper programming of the feeding rate of the strand with respect to mold rotation, it is quite important to compensate for the effective change in diameter of the mold with regard to the feed-in rate of the strand material. After a sufficient number of strands were deposited on the interior surface of the mold, the effective diameter of the mold surface receiving the strands is reduced. Accordingly, the feed-in rate of the strand would have to be reduced or the surface speed of the mold itself would have to be increased. Again, it can be observed that if this compensation were not included, and if the feed-in rate of the strand was not compensated for the change in effective diameter, a truly contiguous pattern of strands could not be obtained.

Accordingly, the metering rollers **12,13** for each of the filament guides **5** are all connected to a suitable electric motor **16** which is operated by a servo feedback controller **17**, the latter being connected to the motor **16** and the drive motor **22**. This type of structure will enable rotation of the metering rollers **12,13** in proportion to strand demand at the mold M. In essence, the metering rollers **12,13** provide the mechanism for moving the strands S at the controlled rate and the air introduced through the venturi throats **7** provide a vehicle for carrying the strands S which are metered through the rollers **12,13**.

It can be seen that when air is introduced under pressure into the various chambers **3**, the air flow rate will increase at the venturi throat **7** by virtue of the reduced diameter. As the strands S are admitted from the discharge aperture **6** into the venturi throat **7**, they will be immediately picked up and conveyed by the moving air stream. In addition the particulate matter will also be picked up and conveyed by the moving air stream. The strands will never be moved at a rate inconsistent with the demand for the strands in the air stream, inasmuch as the strand rate is controlled by the metering rollers **12,13**. As indicated previously, the air will form a boundary layer between the glass strands in the interior walls of the ducts **2** and the delivery tubes **8**. The principle behind the operation of the air boundary layer is well explained in the art regarding plug flow of solids. It is well known, particularly in mining industries, where slurries are transferred through pipes, that the slurry rarely ever contacts the interior wall of the pipe due to the existence of the fluid boundary layer. The same holds true in the transporting of the fibrous strand materials as well as the particulate matter in accordance with the present invention.

A conventional guillotine type cutter **18** is also provided for severing the strands in the ducts **2** at selected

time intervals. Thus when one winding operation is completed, the metering rollers **12, 13** are de-energized, the strands are severed and a new winding operation could be commended by merely initiating the air stream to start the supply of strands. While the mechanism of the present invention has been illustrated with three delivery tubes, it should be recognized that any number of delivery tubes could be employed. Furthermore, the invention is operable with a number of well known filamentary materials normally used in the field of reinforced plastics.

The feedback controller **17** is more fully illustrated in FIG. **2** and shows the components which are employed to program the feed-in rate of the strand S to the mold M. As indicated previously, the mold M is rotated at a desired speed through the action of the motor **22**. The mold may be preferably provided with a series of digital markings on the annular surface thereof and which markings are sensed by a photodiode or similar phototransducer **30** for detecting the rate of speed of mold M. It should be observed that other types of speed detection devices such as tachometers and the like could be employed. However, a photoelectric sensing mechanism has been found to be quite effective in that it readily lends itself to the employment of a digital type circuit whereas tachometers and other types of similar speed sensing mechanisms generally require analogue type circuits. Furthermore, it should be observed that the motor **22** itself could be directly connected to the feedback controller **17**.

It should also be observed that FIG. **2** schematically illustrates one feeding tube **8** along with a pair of cooperating metering rollers **12,13**. The strand S is illustrated as passing through the metering rollers **12,13** and through the feeding tube **8** toward the mold M for deposition on the interior surface thereof. In like manner, it should be observed that the metering rollers **12, 13** could be used to feed strands S through the feeding tube **8** for external winding about a mandrel or similar mold surface, as well as in other types of well-known filament deposition systems.

The phototransducer **30** is connected to a photoamplifier **31** which is capable of providing a square wave train of pulses. The amplitude of the square wave train of pulses will always be the same but the frequency will vary in proportion to the speed of rotation of the mold M. The photoamplifier **31** is, in turn, connected to an integrating network **32** which comprises a pair of resistors **33** and capacitors **34** all connected in the manner illustrated in FIG. **2**. The integrating network is capable of producing a linear voltage from the pulse train which is introduced into the network **32**. The linear voltage would be proportional to the frequency of the pulse train introduced into the network **32**.

The output of the integrating network is connected to a ratio selector **35** which comprises a potentiometer **36** having a movable arm **37**. A four position selector switch (now shown) could be connected in parallel with the potentiometer for adjusting the ratio. One of the positions would provide a 1:1 ratio for application of filament to the interior surface of the mold in the form of circumferential windings. A second position would effectively provide windings of the sinusoidal pattern on the interior surface of the mold and would typically have a ratio of 1:3. Another setting would be capable of generating a ratio of 1:8, so that a swirl type of deposition pattern could be obtained. In like manner, the potentiometer **36** would be capable of producing a voltage ratio in order to provide the desired deposition pattern on the interior surface of the mold.

The output of the ratio selector **35** is then introduced to a digital to analog convertor **47** described hereinafter in more detail and then to a motor controller which includes a preamplifier **39**. The motor controller also receives an output from the convertor **47** as illustrated in FIG. **2**. Another input to the preamplifier **39** is connected to a tachometer **40** on the motor **16** in the manner as illustrated in FIG. **2**. Also connected across the preamplifier **39** in feedback relationship is a stabilizing network **41** which provides a third input to the preamplifier **39**. The stabilizing network **41** is designed to prevent oscillation in the voltage signal resulting from changes in the speed of the motor **22**, which is sensed by the phototransducer **30**.

The output of the preamplifier **39** is connected to a time delay amplifier or so-called "variable time delay" **42**. This time delay **42** also receives an input from a squaring amplifier **43** which is, in turn, connected to a 60 cycle A.C. power source. The squaring amplifier **43** will produce a square wave pulse train for delivery to the time delay amplifier **42**. The time delay amplifier **42** will also generate a ramp wave signal internally therein and which is compared to a linear voltage signal received from the preamplifier **39**. If the level of the linear voltage signal from the preamplifier **39** is greater than the peak of the ramp wave signal generated internally in the time delay amplifier **42**, then no firing pulse will be generated. In the alternative, if the linear voltage received from the preamplifier **39** is less than the peak of the ramp wave pulse train generated in the time delay **42**, a signal is transmitted to a pulse generator **44**, which is essentially an SCR driving circuit. The SCR driving circuit will then fire at the demand of the time delay amplifier **42**.

It can be seen that the pulse generator **44** is, in turn, connected to the motor **16**. Thus, if the speed of the motor **22** is reduced the change of speed will be detected by the phototransducer **30** and this change will be produced in the form of a series of square wave pulses. The square wave pulses, as indicated previously, will be transformed into a linear voltage through the integrating network **32**. The ratio of the voltage which is transmitted to the motor controller is affected by the position of the movable arm **37** and the ratio selector **35**. This output voltage is then caused to generate a series of firing pulses in the pulse generator **44**, in the manner as previously described, in order to operate the motor **16** in proportion to the speed of the mold M. Accordingly, the metering rollers **12,13** which are driven by the motor **16** will always be automatically regulated to provide a rate of filament strand delivery pursuant to the requirements resulting from the speed of rotation of the mold M.

The feedback controller also compensates for an effective reduction in the size of the mold M resulting from layers of filament strands deposited therein. As indicated above, the effective diameter of the mold M which receives the additional filament strands is reduced by the previous deposition of filament strands

therein. The thickness of the material deposited on the interior surface of the mold M is proportional to the number of reciprocating movements made by the feeding tube 8. Thus, as the feeding tube 8 achieves one end position, it will actuate a limit switch 45 which is, in turn, connected to a digital counter 46, the latter, in turn, being connected to the digital-to-analogue converter 47. The limit switch 45, the digital counter 46 and the digital-to-analogue converter 47 are all conventional components and are, therefore, not described in any further detail herein.

The output of the digital-analogue converter (D-A converter) is connected to the preamplifier 39 in the manner as illustrated in FIG. 2. Thus, it can be seen that the D-A converter effectively introduces greater resistance into the output of the ratio selector 35 as the amount of filament in the mold M increases. This increase in the effective resistance on the output of the ratio selector 35 reduces the linear voltage which passes through the preamplifier 39 to the time delay 42. Accordingly, it can be seen that in the same manner as previously described, the speed of the metering rollers 12,13 will be regulated in accordance with the amount of filament deposited in the mold M.

The present invention also provides a modified form of filament feeding system B which is more fully illustrated in FIGS. 3 and 4. The filament feeding system B is similar to the system A, except that the system B reciprocates in an axial direction with respect to the work load such as the mold M. The filament feeding system B generally comprises a support plate 50 which is reciprocatively shiftable in a longitudinal direction by means of a conventional reciprocative mechanism 51 powered by a A.C. motor 52, in the manner as illustrated in FIG. 3. It should be observed that the reciprocative mechanism 51 is not illustrated nor described in any further detail herein since this mechanism is conventional. For example, a rotating shaft with a helical groove terminating in a circumferential groove and having a cam follower riding therein could shift the plate 50.

Secured to the plate 50 is an upstanding support bracket 53 and mounted on the support bracket 53 is a filament feeding mechanism 54 which is substantially similar in all respects to the filament feeding mechanism A and includes a manifold 55. The manifold 55 is internally drilled to form horizontally extending vertically aligned fluid ducts 56 which are provided with diametrally enlarged air chambers 57 at the right-hand end thereof. A back plate 58 is secured to the manifold in the manner as shown.

The back plate 58 is apertured in the area of each of the air chambers 57 to accommodate filament guides 59 and each of which terminates in the provision of a discharge aperture 60 internally in the air chambers 57. The strands of filament S are also introduced into the filament guides 59 and carried through the discharge aperture 60 into the fluid ducts 56. Finally, filament delivery tubes 61 are connected to the ducts 56 and carry the strands S from the filament guides 59 to the area of demand, namely, the mold M. Air under pressure is supplied to the filament feeding system B in the same manner as it was applied to the filament feeding system A. Furthermore, particulate matter may be introduced into the filament feeding system B in the same manner as it was introduced in the filament feeding system A.

Metering rollers 62 are located adjacent to each of the filament guides 59 for metering the amount of strand S to the filament guide 59. In like manner, the rollers 62 receive the glass strands from a creel supporting platform or other supply source (not shown) and feed the glass to the guides 59 in timed relationship to the demand for the strands S at the mold M. Furthermore, the metering rollers 62 are operated by means of a conventional A.C. electric motor 63. Finally, the mold M is operated by means of a conventional A.C. electric motor 64 in the manner as schematically illustrated in FIG. 3. It can be seen that the motor 63 operating the metering roller 62, the motor 52 operating the reciprocative mechanism 51, and the motor 64 operating the mold M are all operatively connected to a control mechanism C, the latter being more fully illustrated in FIG. 4.

The control mechanism C generally comprises a photocell 65 or phototransducer which is capable of sensing a series of circumferentially spaced digital markings 66 located on the exterior surface of the mold M. A photoamplifier 67 is connected to the transducer 65 for amplifying the signal generated by the transducer 65. Furthermore, an integrating network 68 which is substantially identical to the previously described integrating network 32 is connected to the amplifier 67.

A ratio select circuit 69, which is substantially identical to the previously ratio selector 35, is connected to the input of a digital-to-analogue converter 78 in a manner hereinafter described in more detail. The output of the converter 78 is then connected to a motor controller having a preamplifier 70 with a stabilizing feedback circuit 71 connected thereacross in the manner as illustrated in FIG. 4. It is also possible to employ a four position ratio select switch (not shown) in the circuit 69 in the manner previously described. Connected to the output of the preamplifier 70 is a time delay amplifier 72 which receives a square wave input form a squaring amplifier 73, the latter being connected to a suitable source of A.C. power (not shown). Finally, the output of the time delay amplifier 72 is connected to a pulse generator 74 which is essentially an SCR driving circuit. The output of the pulse generator 74 is in turn connected to the motor 63 which drives the metering rollers 62 in the manner as illustrated in FIG. 4. This portion of the circuit operates in substantially the same manner as the feedback controller illustrated in FIG. 2 operated.

It should also be observed that a tachometer 75 is connected to the motor 63 and is, in turn, connected to an input in the preamplifier 70 in the manner as illustrated in FIG. 4. This tachometer also enables the compensation of any transients affecting the speed of the motor 63.

A digital counter 76 is operated by a limit switch 77 which is located to be actuated by the feeding tubes 61. The feeding tubes 61 may be constructed in the form of a lance which will actuate the limit switch each time the feeding tubes (or the lance) reaches one selected end position. Each actuation of the limit switch 77 will generate a pulse which causes the counter 76 to advance one count. Furthermore, the output of the

counter **76** is connected to a digital-to-analogue converter **78** which is in turn connected to a point intermediate the ratio select circuit **69** and the motor controller in the manner as illustrated in FIG. **4**. Again, this portion of the circuit compensates for the additional build-up of filament applied to the interior surface of the mold M. This circuit, in like manner, operates in the same manner as the portion of the circuit illustrated in FIG. **2**, which provided similar compensation.

Also connected to the output of the converter **78** is another motor controller which includes a preamplifier **79** having a stabilizing feedback circuit **80** connected thereacross. The preamplifier **79** has an output connected to a time delay amplifier **81** which receives a square wave signal from a squaring amplifier **82**, the latter being connected to a suitable source of 60 cycle A.C. electrical current (not shown). The output of the time delay amplifier **81** is then connected to a pulse generator **83** which is, in turn, connected to the motor **52** for driving the motor **52**. As indicated previously, the motor **52** operates the reciprocating mechanism **51** in order to provide a reciprocative motion to the feeding tubes **61**. A tachometer **84** is connected to the motor **52** and also has an input to the preamplifier **79** in order to adjust for transients affecting the speed of the motor **52**.

It can be seen that the control circuit C properly programs the rate of the feeding roller **62** to the speed of rotation of the mold M. In this manner, the prior art problems of overfeed and underfeed have been obviated. In addition, the control circuit C also properly programs the rate of movement of the feeding tube **61** with respect to the speed of rotation of the mold M and the speed of rotation of the delivery rollers **62**. Finally, the control circuit C also compensates for the additional build-up of filament deposited on the interior surface of the mold M to affect the speed of rotation of the motor **52** and hence the rate of reciprocation of the feeding tube **61** as well as the speed of the roller **62** and hence the rate of delivery of the strand S.

It can be seen that the present invention provides an absolute control of the filament input in pretimed rotation to the rotational speed of rotation of the mold in such manner that it is possible to achieve a proper filament geometry on the interior surface of the mold. In this manner, it is possible to apply circumferential windings, helical windings, or spiral windings or any other type of geometric pattern as desired. Furthermore, the uniqueness of this feeding system enables an application of filament strands to the interior surface of the mold in the same degree of accuracy that can be achieved by conventional filament winding techniques on the exterior surface of the mold or mandrel. In addition, it is possible to achieve a proper deposition and controlled amounts of particulate matter or chopped fiber or flakes along with the filament strands.

The present invention also provides a modified form of material feeding and application system F which is more fully illustrated in FIG. **5** and generally comprises a conically shaped rotating mold **90**. The mold **90** is driven by any suitable mechanism such as the schematically illustrated belt and motor drive **91**. Whereas in the previous systems, the filament strands were applied to the major interior surface of a generally cylindrical mold, the filament feeding system F enables the deposition of strands on conically shaped surfaces or other irregular type surfaces. It can be seen that the filament feeding system F includes a lance **92**, having a series of filament feeding tubes **93** carrying filament strands which are centrifugally deposited to the interior surface **94** of the mold **90**. Normally, if the strands were applied to the diameterally reduced end of the conically shaped mold **90**, they would tend to migrate toward the diameterally enlarged end. However, a fixed retaining bar **95** is inserted within the mold **90** in the manner illustrated in FIG. **5**. Thus, as the filament strands are applied to the interior surface of the mold **90**, they are effectively held in place by the retaining bar **95**. It should be observed that a feedback control system of the type employed in FIGS. **2** and **4** could also be used with the filament feeding system F. Therefore, this type of control system is not described in any further detail in connection with the filament feeding system F.

It should be understood that changes and modifications in the form, construction, arrangement, and combination of parts presently described and pointed out may be made and substituted for those herein shown without departing from the nature and principle of my invention.

Having thus described our invention, what we desire to claim and secure by letters patent is:

1. A device for for delivering a textile-like strand to a continuously moving demand station which requires delivery of said strand on a continuous basis, said device comprising a first member a means operatively associated with said first member enabling a fluid stream to be introduced therein, a second member guiding the strand into said first member and said fluid stream, means operatively associated with said first member for causing an increase in the flow rate of the fluid stream in said first member, metering means for continuously delivering the strand to the second member at a controlled rate to thereby enable conveying of the strand in said fluid stream to the demand station, integrating means for operatively measuring the average continuous demand of strand at the demand station, and control means operatively connected to said integrating means and said metering means for actuating the metering means to continuously supply said strand to said second member at a rate consistent with the demand of said strand at the demand station.

2. The device of claim **1** further characterized in that the means for causing an increase in the flow rate of the fluid stream is a restriction forming a venturi throat.

3. The device of claim **1** further characterized in that the strands are fiberglass filaments.

4. The device of claim **3** further characterized in that means communicates with said first member to deliver particulate matter into said fluid stream for conveyance thereby to the demand station.

5. The device of claim **1** further characterized in that the control means provided for controlling the rate of the metering means and of delivery of the strand is a servo-operated feedback controller.

6. The device of claim **1** further characterized in that means operatively forms part of the control means to adjust the metering means to compensate for effective change in demand of the strand by virtue of previous strand delivery.

7. A device for delivery of textile-like strands to a demand point, said device comprising a housing, means operatively connected to said housing and defining a first tubular member carrying a textile-like strand, means defining an air chamber in said housing, said first tubular member extending into said air chamber and having a discharge aperture through which said strand passes from said tubular member into said air chamber, means defining a venturi throat in said air chamber spaced forwardly from said discharge aperture in the direction of movement of said strand, tubular duct means operatively communicating with said venturi throat to carry the strand delivered into said air chamber, a plurality of metering rollers located on the entrant side of said tubular member for continuously metering the amount of strand introduced through said tubular member, and means operatively connectable to said metering rollers for actuating the metering rollers to continuously supply said strands at a rate consistent with the demand of the strand at the demand point.

8. The device of claim 7 further characterized in that means is provided for shifting the housing in pretimed relationship to the rate of actuation of the metering rollers.

9. A method for delivering a textile-like strand to a movable receiving member on a continuous basis in response to demand thereby, said method comprising continuously metering a supply of the strand to an air chamber, introducing air into said chamber under pressure increasing the flow rate of the air in said chamber at a point proximate to the delivery of the strand, continuously carrying said strand to said movable receiving member in said air stream, sensing the rate of movement of said movable receiving member, continually monitoring the amount of strand required by said movable receiving member pursuant to the rate of movement thereof, and continually metering the strand at a rate consistent with the demand of the strand by the movable receiving member.

10. The method of claim 9 further characterized in that a control signal is generated resulting from the sensing of the movement of said receiving member, and the strand is metered in response to the control signal and such metering is controlled through a servo feedback means.

11. The method of claim 9 further characterized in that the method includes automatically adjusting the the amount of strand metered to said receiving member to compensate for the amount of strand previously delivered to the receiving member.

12. In a system for controlling the deposition rate of a strand material to a movable receiving member pursuant to demand requirements, feeding means for supplying the strand material to the receiving member, sensing means for measuring the effect of the demand for the strand material by the receiving member and enabling generation of a control signal in response to the sensed demand, metering means for metering the strand material to the feeding means at the measured demand, selector means operatively connected to said integrating means for adjusting the ration of strand material delivered to said receiving member in response to the strand demand thereby, and means operatively connected to said metering means and selector means to measure the rate of movement of said metering means and compare same to said integrated control signal average and generating an actuating signal based on such difference, and actuable means operatively connected to said last named means and said metering means operate the metering means in response to said actuating signal, to thereby permit feeding of said strand material to said receiving member at the demand created thereby.

13. The system of claim 12 further characterized in that the sensing means comprises a transducer sensing the demand for strand, and an amplifying system is connected to said transducer for amplifying the signal, and the actuable means comprises a motor controller.

14. The system of claim 12 further characterized in that the feeding means is shiftable with respect to the movable receiving member, and means is connected to said selector means and said actuable means to shift the feeding means in proper time relationship to the demand for strand by the receiving member.

15. The method of claim 9 further characterized in that said strand is carried to the receiving mechanism in a feeding member, and that the feeding member is moved toward and away from said receiving member in timed relationship to the movement of said feeding member during the delivery of said strand to said receiving member.

16. An apparatus for delivering material strands to a movable receiving member in response to demand by said receiving member, said apparatus comprising a housing having at least one chamber therein, tubular feeding means communicating with said chamber for delivering said material strand thereinto, means enabling the introduction of a fluid under pressure into said chamber, means forming a venturi throat in said chamber to permit an increase in the rate of movement of said fluid passing into and through said venturi throat, tubular duct means communicating with said venturi throat and leading to said receiving member for conveying the strand from said chamber in said fluid stream to said receiving member, metering means operatively associated with said tubular feeding means for continuously metering the amount of strand delivered to said feeding means, means operatively associated with said housing for moving said housing and said tubular duct means in response to movement of said movable receiving member, and control means operatively associated with said metering means and said motion means to control the rate of delivery of said strand to said feeding means in response to movement of said movable receiving member.

17. The apparatus of claim 16 further characterized in that means is operatively associated with said motive means to enable reciprocative movement of said housing and tubular duct means with respect to said movable receiving member.

18. The apparatus of claim 16 further characterized in that said movable receiving member is a rotatable die-forming member capable of receiving said strand during rotation thereof and that said metering means is controlled to deliver strand in an amount proportioned to the rate of rotation of said die-forming member.

* * * * *