United States Patent

Asano

[15] 3,641,714

[45] Feb. 15, 1972

[54] MACHINE TOOL PROVIDED WITH APPARATUS FOR COMPENSATING THE WEAR OF GRINDING WHEEL

[72] Inventor: **Hiroaki Asano**, Kariya, Japan

[73] Assignee: **Toyoda Koki Kabushiki Kaisha**, Kariya-shi, Japan

[22] Filed: **May 22, 1970**

[21] Appl. No.: **39,604**

[30] **Foreign Application Priority Data**

May 30, 1969 Japan.....44/42625

[52] **U.S. Cl.**.....**51/165.87**

[51] **Int. Cl.**.....**B24b 49/00**

[58] **Field of Search**.....51/165, 165.87, 165.88; 125/11

[56] **References Cited**

UNITED STATES PATENTS

3,155,086	11/1964	Ornehage	51/165.68
3,517,659	6/1970	Stewart	51/165 R X
3,500,811	3/1970	Perkins	125/11
3,457,678	7/1969	Temple	51/165 X
3,404,670	10/1968	Gluchowicz	125/11
3,339,317	9/1967	Cleland	51/165

Primary Examiner—Harold D. Whitehead

Attorney—Berman, Davidson and Berman

[57] **ABSTRACT**

A grinding machine is provided with first feeding means for moving a wheel slide toward and away from a workpiece, a dressing tool arranged to be moved transversely of the face of the grinding wheel to dress the grinding wheel, second feeding means for moving the dressing tool toward and from the surface of the grinding wheel, detecting means for sensing the engagement between the dressing tool and the surface of the grinding wheel, and control means adapted to control the first and second feeding means so as to advance the wheel slide and the dressing tool until the detecting means detects the engagement between the dressing tool and the surface of the grinding wheel.

6 Claims, 7 Drawing Figures

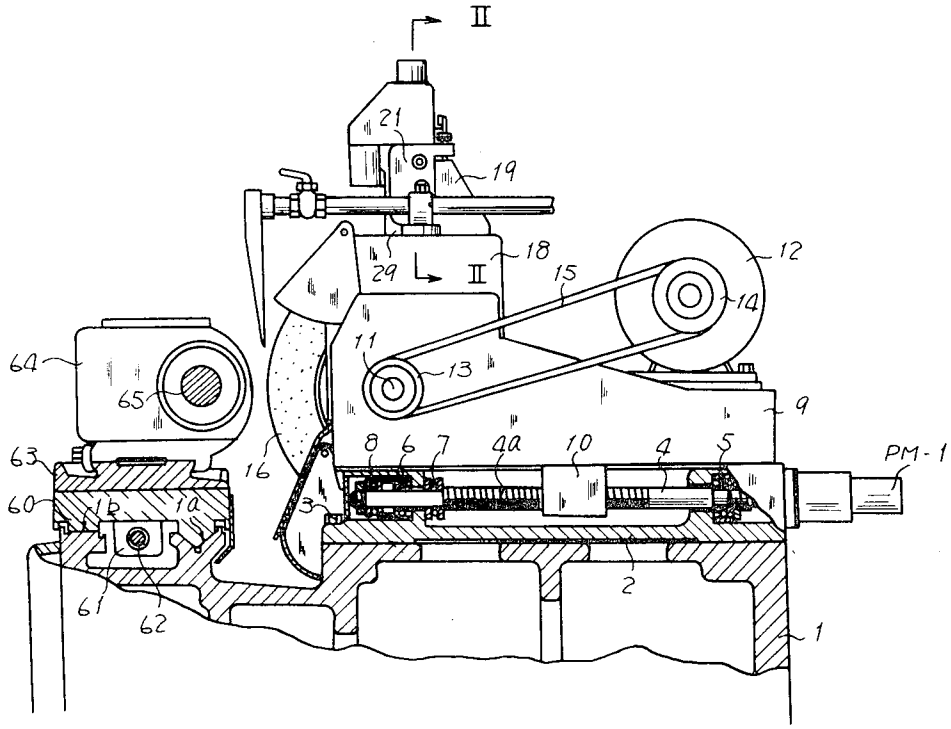

FIG. 1

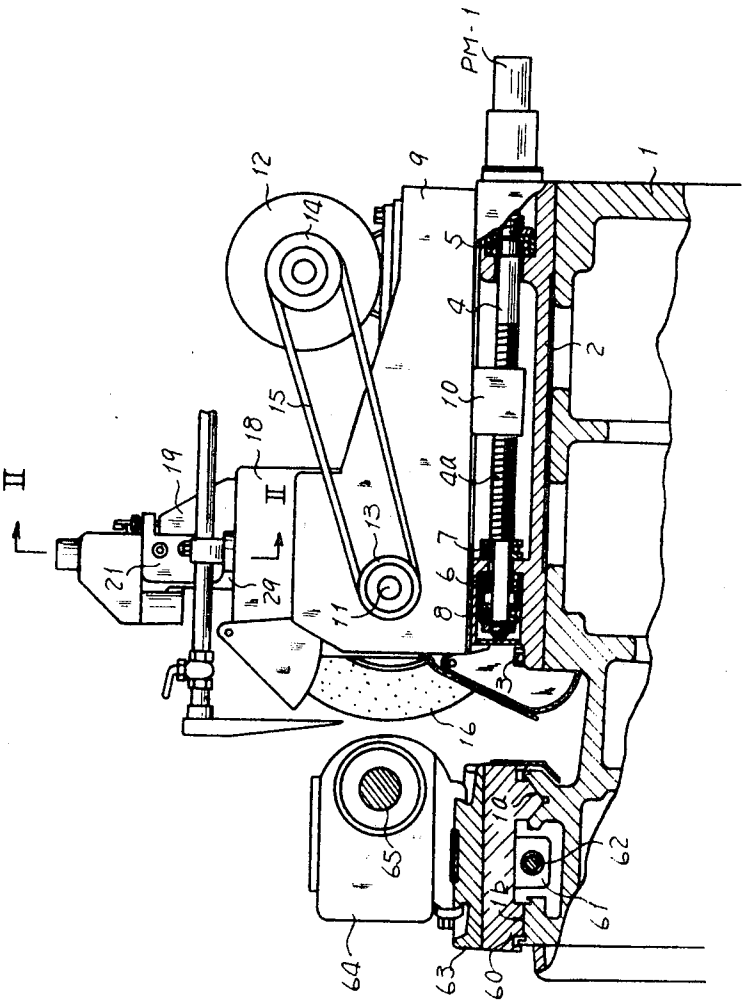

FIG. 4

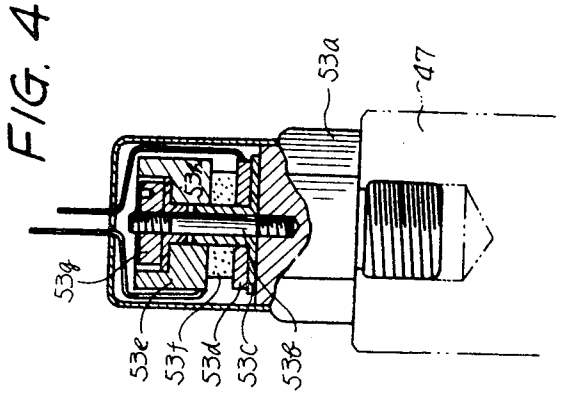

INVENTOR:
HIROAKI ASANO,
BY
Berman, Davidson & Berman,
ATTORNEYS.

FIG. 3

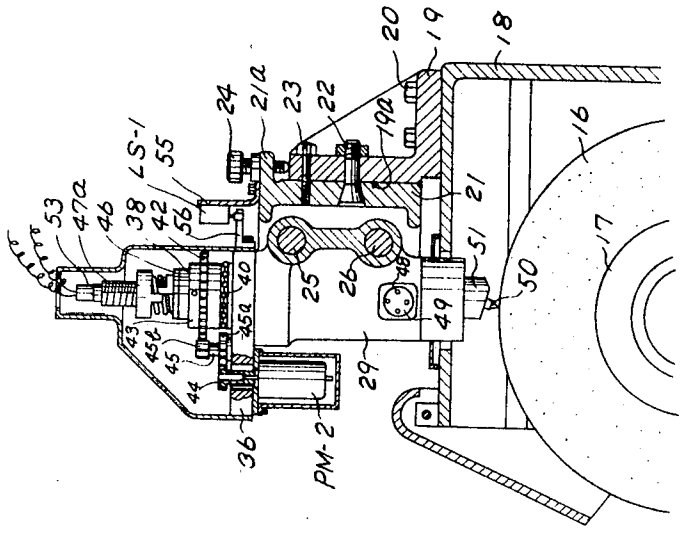

FIG. 2

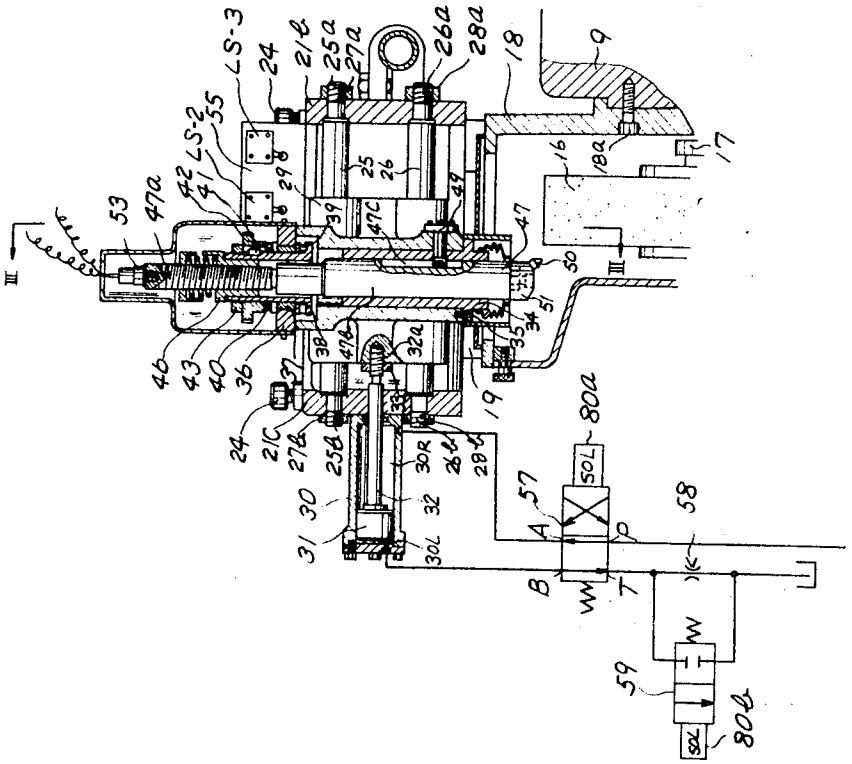

INVENTOR:
HIROAKI ASANO,
BY
Berman, Davidson & Berman,
ATTORNEYS.

FIG. 6

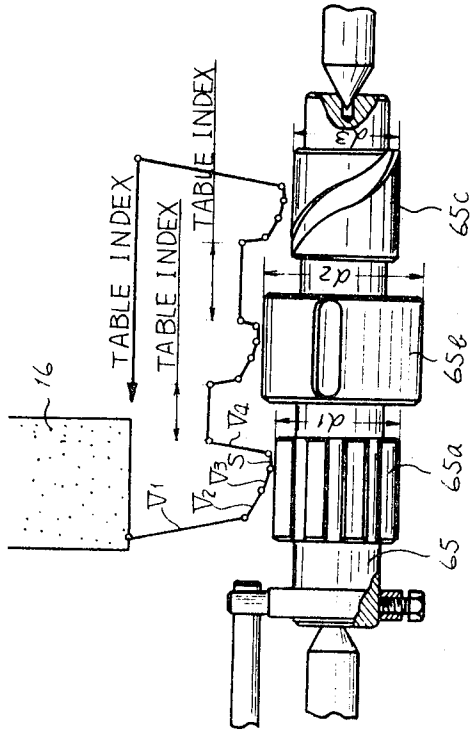

FIG. 5

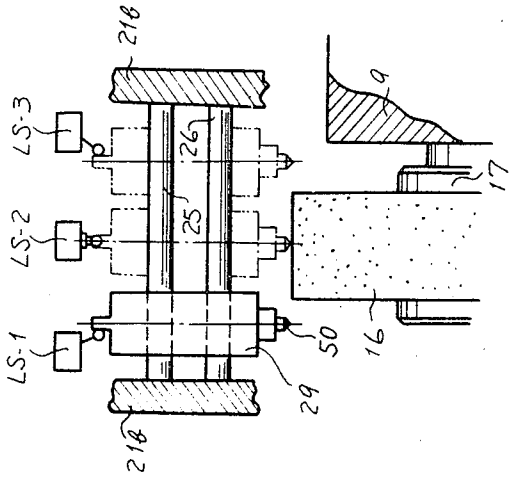

INVENTOR:
HIROAKI ASANO,

BY

Berman, Davidson & Berman,

ATTORNEYS.

FIG. 7

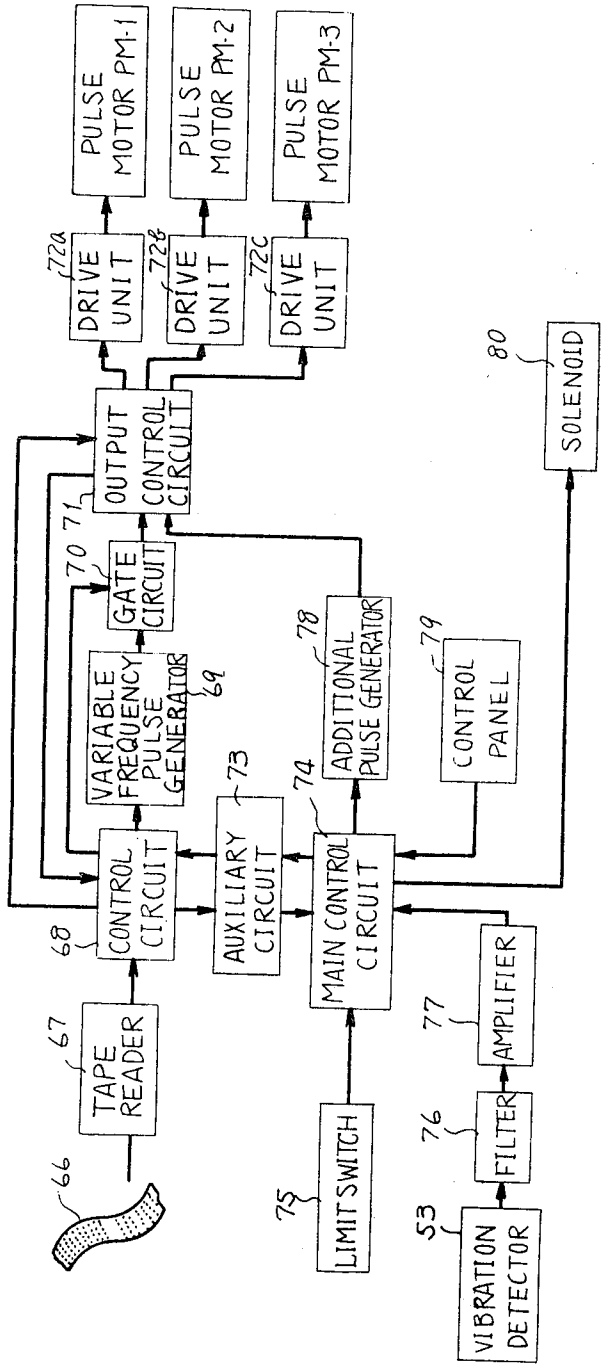

INVENTOR:
HIROAKI ASANO,
BY
Berman, Davidson & Berman,
ATTORNEYS.

MACHINE TOOL PROVIDED WITH APPARATUS FOR COMPENSATING THE WEAR OF GRINDING WHEEL

BACKGROUND OF THE INVENTION

The present invention relates to a machine tool provided with apparatus for compensating for the wear of a grinding wheel, and more particularly to an apparatus which eliminates the degeneration in machining accuracy on a workpiece due to the wear of a grinding wheel.

Conventionally, the degeneration of machining accuracy caused by thermal deformations of the grinding machine and workpiece, elastic deformation thereof due to the grinding operation, backlash of feed screws in feeding mechanisms, grinding wheel wear, and the like have been eliminated by using a sizing device. The degeneration of machining accuracy due to grinding wheel wear cannot be eliminated except by the use of a sizing device, whereas the degeneration due to the other above-mentioned factors can be substantially reduced by properly arranging the components of the grinding machine. Thus, when a workpiece provided with grooves such as the grooves for a key or spline is required to be ground, high machining accuracy cannot be expected, since the sizing device cannot be easily applied to size the dimension of the workpiece, and also because sizing devices are frequently damaged by the engagement between the grooves and the feeler of the sizing device. Furthermore, a grinding machine provided with such a sizing devices becomes very expensive, since the sizing device itself is quite expensive.

SUMMARY OF THE INVENTION

It is therefore a main object of the present invention to provide a grinding machine having an apparatus capable of eliminating the degeneration in machining accuracy on a workpiece due to grinding wheel wear.

Another object of the invention is to provide a grinding machine having an apparatus for compensating for the wear of a grinding wheel and which serves to increase machining accuracy resulting from the use of the machine without requiring the use of a sizing device.

A still further object of the invention is to provide a grinding machine having an apparatus for compensating for the wear of its grinding wheel, the apparatus being less expensive, simpler in construction, and more reliable in operation than corresponding devices previously employed.

According to the present invention there is provided a grinding machine having an apparatus for compensating for the wear of its grinding wheel. The grinding machine comprises a bed, a work support slidably mounted on the bed to support a workpiece thereon, a wheel slide slidably mounted on the bed and carrying a rotatable grinding wheel, first feeding means for moving the wheel slide toward and from a workpiece on the work support, a dressing tool arranged to be moved transversely of the face of the grinding wheel to dress the grinding wheel, a second feeding means for moving the dressing tool toward and from the surface of the grinding wheel, detecting means for sensing the engagement between the dressing tool and the surface of the grinding wheel, and control means adapted to control the first and second feeding means to advance the wheel slide and the dressing tool until the detecting means detects the engagement between the dressing tool and the surface of the grinding wheel, whereby degeneration of machining accuracy due to the wear of the grinding wheel is compensated for and whereby high machining accuracy may be obtained.

BRIEF DESCRIPTION OF THE DRAWINGS

The foregoing and other objects of the present invention will become fully apparent from the following description of a preferred embodiment of the present invention, with reference to the accompanying drawings, in which:

FIG. 1 is a side view of a numerically controlled grinding machine equipped with an apparatus according to the present invention.

FIG. 2 is a sectional view taken along the line II—II of FIG. 1.

FIG. 3 is a view taken along the line III—III in FIG. 2.

FIG. 4 is a sectional view of a vibration detector according to the present invention.

FIG. 5 is a schematic view showing the relationship between the dressing tool and the grinding wheel.

FIG. 6 is an explanatory diagrammatic view including a typical workpiece.

FIG. 7 is a block diagram showing the control system for a numerically controlled grinding machine such as that illustrated in FIG. 1.

DETAILED DESCRIPTION OF THE INVENTION

Referring now to FIG. 1, a slide base **2** is fixed to a bed **1** by means of screws **3**. A screw shaft **4** is rotatably supported at both of its ends by antifriction ball bearings **5**, **6** which are mounted on slide base **2**. The screw shaft **4** is restrained from axial movement by means of thrust bearings **7** and **8** at the left end thereof, and at the right end thereof is connected to pulse motor PM–1 which is secured to slide base **2**. A wheel slide **9** is slidably mounted on the slideways which are formed on the slide base in parallel relationship with respect to screw shaft **4**. A feed nut **10** secured to the underside of wheel slide **9** is threadedly engaged with a threaded portion **4***a* of screw shaft **4** so that wheel slide **9** may be moved toward and from a workpiece **65** by means of pulse motor PM–1. A wheel shaft **11** is rotatably carried by wheel slide **9** and is rotated by means of the grooved pulleys **13** and **14** and V-belt **15** by a motor **12** which is mounted on the rear top portion of wheel slide **9**. A grinding wheel **16** is fixedly mounted on wheel shaft **11** by means of a wheel sleeve **17** (FIGS. **2** and **3**) and is covered by a wheel guard **18** secured to wheel slide **9** by screws **18***a*. A bracket **19** provided with a vertical flat surface **19***a* is fixed on the wheel guard **18** by means of screws **20**. An adjustable rest **21** in face contact with the surface **19***a* and rotatable about a pivot pin **22** is mounted on bracket **19** by means of a screw **23**. A pair of adjusting screws **24** engaged with the top of bracket **19** are threadedly engaged with a projection **21***a* of adjustable rest **21** which overhangs the bracket **19**, whereby the adjustable rest **21** may be turned around the pivot pin **22** so as to obtain the required position thereof at the required angle with respect to the axis of wheel spindle **11** by suitably turning the screws **24**.

Integrally formed on the adjustable rest are a pair of projections **21***b* and **21***c* between which two guide bars **25** and **26**, parallel to each other, are connected by nuts **27***a*, **27***b*, and **28***a*, **28***b*, threadedly engaged on reduced threaded portions **25***a*, **25***b*, **26***a* and **26***b* at the ends of the guide bars. A dresser slide **29** is snugly and slidably mounted on the guide bars **25** and **26**. A piston rod **32** (FIG. **2**) has its right end connected to the side of dresser slide **29** in parallel relationship with respect to the guide bars **25** and **26**, and has its left end connected to a piston **31** which is slidably mounted in a cylinder **30** secured to the adjustable rest **21**, whereby the dresser slide **29** is movable concurrently with piston **31**. The dresser slide is provided with a vertical bore in which a sleeve **34** is mounted, said sleeve being fixedly secured to dresser slide **29** by screws **35**. A cap plate **36** is fixed on the top of the bore and is provided with a second bore in which a bushing **37** has a press fit. A sleeve **38** is rotatably supported by cap plate **36** but is restrained from axial movement by the provision of a flange at the lower end of sleeve **38** and a nut **43** engaged with the sleeve at the upper end thereof, with thrust bearings **39** and **40** and gear **42** interposed therebetween, said gear **42** being connected to the sleeve **38** by a key **41** therebetween. A pulse motor PM–2 is secured to the underside of the cap plate **36**. The gear **44** secured to the output shaft of pulse motor PM–2 is meshingly engaged with a larger diameter gear **45***a* which is fixed to a shaft **45** rotatably mounted on cap plate **36**. A smaller diameter gear **45***b* on the shaft **45** is in turn meshed with gear **42**, whereby the sleeve **38** may be rotated by pulse motor PM–2.

An inner sleeve **46** is disposed within and secured to the sleeve **38**. A dressing shaft **47** is provided at the upper end thereof with a threaded portion **47***a* which is threadedly engaged with a threaded portion on the inner bore of the sleeve **46**, and is snugly engaged at its lower portion with the inner bore of the sleeve **34**. A key member **49** secured to the dresser slide **29** is slidably engaged with an axially extending long groove **47***c* at the lower portion of the dressing shaft **47**, whereby rotational movement of dresser shaft **47** is prevented but axial movement thereof is allowed. A bracket element **51** having a dressing tool **50** is fixedly secured to the lower end of dresser shaft **47**, and a vibration detector **53** is provided at the upper end of said dresser shaft.

The housing **53***a* of vibration detector **53** is threadedly secured on dresser shaft **47**, as shown in FIG. **4**. A fastening shaft **53***b* is axially secured in the housing **53***a*. Lower electrode **53***d*, ferroelectric substance **53***f*, for example barium titanate, and weight member **53***e*, used as an upper electrode, are successively interposed between the lower and upper insulating members **53***c* and **53***h* which electrically insulate lower and upper electrodes **53***d*, **53***e* and the ferroelectric substance **53***f* from the surrounding members. A nut **53***g* is threadedly engaged with the securing shaft **53***b* to impart a predetermined pressure to ferroelectric substance **53***f*. Thus, when the dressing tool **50** is engaged with the surface of grinding wheel **16**, the vibration detector **53** is vibrated through dresser shaft **47**, and thus the pressure applied to the ferroelectric substance **53***f* is changed and is converted into electric voltage changes in accordance with the specific vibration generated by the engagement between dressing tool **50** and grinding wheel **16**, whereby the vibration detector **53** acts as a transducer to detect the specific vibrations and to convert them to electric voltage changes, as they occur between the lower and upper electrodes **53***d*, **53***e*.

Secured to adjustable rest **21** is a bracket **55** on which are mounted limit switches LS–1, LS–2, and LS–3, said limit switches being respectively actuated by an engaging piece **56** (FIG. **3**) at the times when dressing tool **50**, moving concurrently with engaging pieces **56** is brought to left end position, middle position, or right end position, relative to grinding wheel **16**. A changeover valve **57**, which changes the direction of pressure fluid supply to the cylinder **30**, is connected to the cylinder **30** to control the movement of dresser slide **29**. Ports A, B, P and T of changeover valve **57** are respectively connected to right chamber **30**–R, left chamber **30**–L, a pressure fluid supply source (not shown) and a sump through a variable throttle valve **58**. A bypass valve **59** is provided in parallel with the throttle valve **58**, whereby to enable the dresser slide **29** to move with either a rapid speed or a slow speed. A traverse table **60** is slidably mounted on slideways **1***a* and **1***b* which are formed on the bed **1** parallel to the axis of the grinding wheel **16**. Integrally formed on the under side of the traverse table **60** is a ball nut **61** which is threadedly engaged with a feed screw shaft **62**, which in turn is rotatably mounted on the bed **1** but is restrained from axial movement. A pulse motor PM–3 is connected to the feed screw shaft **62** at one end thereof so that traverse table **60** is movable along the slideways **1***a* and **1***b*. A swivel table **63** is pivotally mounted on traverse table **60**, and furthermore a headstock **64** and a footstock (not shown) are mounted on said swivel table for supporting a workpiece, for example a workpiece **65** having longitudinal grooves, such as grooves for splines or key grooves, said workpiece being supported between said headstock and said footstock, between centers, as shown, for example, in FIG. **6**.

The control system for controlling the pulse motors PM–1, PM–2, PM–3 are shown in FIG. **7**. Said motor may be of a conventional type, such as Models EHPM–1/2–SSSS, EPM–109 and EHPM–1–SSSS, respectively manufactured by Fujitsu, Ltd., Tokyo, Japan, suitable information stored in a tape **66** is read by a conventional tape reader **67** and is preset on the counter of a control circuit **68**. Tape reader **67** may be of any suitable conventional type, for example, Model **424** made by Tally Corporation. Control circuit **68** is one of the modules of a conventional control system such as Fanuc **260**, manufactured by Fujitsu, Ltd., Tokyo, Japan. This conventional, commercially available control system also includes most of the additional elements shown in FIG. **7**, namely, variable frequency pulse generator **69**, gate circuit **70**, output control circuit **71**, drive units **72***a*, **72***b* and **72***c*, auxiliary circuit **73**, main control circuit **74**, additional pulse generator **78** and control panel **79**.

The control circuit **68** is effective for supplying output control circuit **71** with a selecting signal for selecting the pulse motor or motors to be driven in response to the signal, namely, PM–1, PM–2, or PM–3. The control circuit also provides a rotational signal for selecting the rotational direction of the pulse motor or motors to be rotated, and the control circuit also furnishes the variable frequency pulse generator **69** with a command signal for specifying the frequency of electric pulses generated thereby. Electric pulses generated by the variable frequency pulse generator **69** are applied to the output control circuit **71** through the gate circuit **70**. In accordance with the selection signal from the control circuit **68**, the output control circuit **71** applies the directional signal and the electric pulses furnished through the gate **70** and the output control circuit **71** to a drive unit or drive units selected from the drive units **72***a*, **72***b*, and **72***c*, which are respectively associated with pulse motors PM–1, PM–2, and PM–3. The output control circuit **71** also is effective to feed back electric pulses applied to the selected drive unit or drive units, to the control circuit **68**. Electric pulses applied to the drive unit or units are referred to as "drive pulses" hereinafter. The number of drive pulses is subtracted from the number of the command pulses preset on the counter of control circuit **68**. When the number stored in the counter becomes zero, the control circuit **68** acts to close the gate **70**, to thereby stop the rotation of the selected pulse motor or motors. The auxiliary circuit **73**, which controls the auxiliary functions of the numerically controlled machine tool in accordance with information on the tape **66**, is connected to the control circuit **68** in the manner schematically indicated in FIG. **7**, receiving information from the control circuit **68** and applying the information to a main control circuit **74**. A control panel **79** is provided, said control panel having its control elements connected to the main control circuit **74**.

In accordance with the present invention, a compensating system is operatively added to the above-mentioned system to compensate for the wear of grinding wheel **16** by operating pulse motors PM–1 and PM–2. Numeral **75** generally indicates the limit switches LS–1, LS–2 and LS–3 which generate signals to confirm the position of dressing tool **50**. The vibration detector **53** detects the various vibrations transmitted by the tool and translates these vibrations into changes in electric voltage, forming a signal which is applied to a filter **76**. The filter **76** selects a specific voltage change which is generated by the engagement between dressing tool **50** and grinding wheel **16**. The selected specific voltage change is supplied to an amplifier **77** and is amplified thereby, and is then furnished to the main control circuit **74**. Numeral **80** generally indicates the solenoids of changeover valve **57** and bypass valve **59**, which are respectively employed to change the direction and speed of the movement of dresser slide **29**. The additional pulse generator **78** generates additional electric pulses which are used to move the wheel slide **9** and the dressing tool **50** for compensating for grinding wheel wear and for dressing the grinding wheel **16** in accordance with the signals supplied from the main control circuit **74**.

In case the specific vibration is not detected by the vibration detector **53**, even if the limit switch LS–2 is actuated in accordance with the transverse movement of dressing tool **50**, the additional pulse generator **78** applies a predetermined number of additional electric pulses to output control circuit **71**, because the main control circuit **74** applies a signal to the additional pulse generator **78** to generate additional electric pulses after the left-hand switch LS–1 or the right-hand limit switch LS–3 is actuated. At the same time, the main control circuit **74** supplies a control signal to control circuit **68**

through auxiliary circuit **73**, whereby the control circuit **68** furnishes output control circuit **71** with selective direction signals for pulse motors PM–1 and PM–2. The output control circuit **71** supplies drive units **72***a* and **72***b* respectively associated with pulse motors PM–1 and PM–2 with the directional signals and the additional pulses supplied from the additional pulse generators **78**, whereby the pulse motors PM–1 and PM–2 are rotated, and thus wheel slide **9** and dressing tool **50** are advanced to compensate for the wear of grinding wheel **16**.

A typical operation, in which a workpiece having different diameters is ground, is described hereinafter. The feeding data for wheel slide **9**, indexing data for traverse table **60**, finished diameters d_1, d_2, d_3 of respective portions to be ground, and the like, are programmed on the tape **66** in accordance with the sequence of the operations. At the beginning of the operation, traverse table **60** and wheel slide **9** are retracted to their original positions, and thereafter, the tape reader **67** is placed in operation. The pulse motor PM–1 operates to rotate its shaft at high speed and to rapidly advance the wheel slide **9** toward the workpiece, and thus, the wheel slide **9** is advanced at a rapid feed speed V_1 toward the workpiece **65** until the distance between the first portion **65***a* of the workpiece **65** and the grinding wheel **16** becomes a predetermined amount, for example, 0.05 mm. Meanwhile, the number stored in the counter of the control circuit **68** is subtracted by the number of the drive pulses fed back by the output control circuit **71**. When the rapid feed of wheel slide **9** is completed, that is, when the number stored in the counter becomes zero, the tape **66** is fed for next numerical information. The pulse motor PM–1 is supplied with lower frequency electric pulses in accordance with the signal then furnished by the control circuit **68**, and thus, the wheel slide **9** is advanced at the rough grinding rate V_2 to the first portion **65***a* to grind the peripheral surface thereof. Meanwhile, the number of drive pulses is subtracted from the number of command pulses newly registered in the counter of control circuit **68**. When the predetermined amount is advanced, that is, the rough grinding operation is completed, a third signal is supplied from control circuit **68** to the pulse generator **69**, causing it to generate low-frequency electric pulses for slower further rotation of the shaft of the pulse motor PM–1, whereby the wheel slide **9** is fed at a fine feeding rate V_3 to perform the fine grinding operation on the portion **65***a*. When the fine infeed is completed, spark-out operation is effected for a predetermined period *s*, and thereafter, wheel slide **9** is retracted at a high retracting speed V_4. This period *s* for spark-out operation can be manually regulated at control panel **79**. When the wheel slide **9** is retracted by a predetermined distance programmed on the tape **66**, the data on the tape **66** is read by tape reader **67**, and the control circuit **68** then furnishes a signal to the auxiliary circuit **73** to perform the auxiliary operation. At the same time, the auxiliary circuit **73** supplies a command signal to the main control circuit **74** and the solenoids **80***a* and **80***b* of changeover valve **57** and bypass valve **59** are energized to change the direction of pressure fluid and to bypass throttle valve **58**. The pressure fluid from the pressure source (not shown) is supplied to the left chamber **30**–L of cylinder **30** through the P and B ports of the changeover valve. At this time, the fluid in the right chamber **39**–R is drained to the reservoir through the A and T ports and thence, through the bypass valve **59**. Thus, the piston **31** and the dressing tool **50** is fixed to the lower end of the dressing shaft **47** journaled to the dresser slide are bodily moved to the right, as viewed in FIG. **2**, at a higher speed. When the dressing shaft **47** and dressing tool **50** are moved rightwardly of the face of grinding wheel **16**, and the limit switch LS–2 is actuated by the engaging piece **56**, the vibration detector **53** is fixed at the upper end of the dressing shaft **47** does not detect any vibration caused by the engagement between dressing tool **50** and grinding wheel **16**, in the event that the grinding wheel **16** has been worn down by the grinding operations on the first portion **65***a* of the workpiece **65**. Thus, the dresser slide **29** is further moved toward the right and arrives at the right-hand position such as to actuate the limit switch LS–3. Responsive to the signal from the limit switch LS–3, the main control circuit **74** supplies a position-compensating signal to the additional pulse generator **78** and the command signal to the control circuit **68** through auxiliary circuit **73**. Accordingly, the additional pulse generator **78** supplies the predetermined number of electric pulses to output control circuit **71**, and control circuit **68** also supplies a selective signal and a directional signal to output control circuit **71** such that it supplies the additional electric pulses furnished by the additional pulse generator **78** and a directional signal to the drive unit **72***a* and to the drive unit **72***b* in accordance with the selective signal, whereby the pulse motors PM–1 and PM–2 are operated to rotate their shafts so as to advance the wheel slide **9** and the dressing tool **50** by a predetermined amount, for example, 1 micron. When the dressing tool **50** and wheel slide **9** are advanced by said predetermined amount, the changeover valve **57** is operated to change the flow direction of the pressure fluid so as to move the slide **29** leftwards at a rapid speed. During the leftward movement of the dresser slide **29**, the limit switch LS–2 is actuated when the dressing tool **50** is located substantially at the midpoint of the face of the grinding wheel, so that the vibration detector **53** can detect the specific vibration which is caused by the engagement between the grinding wheel **16** and the dressing tool **50**. However, when the specific vibration is not detected by the vibration detector **53**, the slide **29** is further moved leftwards and the limit switch LS–1 and the left-end position is actuated, whereby the pulse motors PM–1 and PM–2 are operated respectively to advance dressing tool **50** and grinding wheel **9** by the predetermined amount previously referred to in the same manner as in the previously described cycle. In this manner, as long as the specific vibration characteristic of the engagement between dressing tool **50** and the face of grinding wheel **16** is not detected by the vibration detector **53** during the actuation of limit switch LS–2, the above-mentioned cycle of performance, that is, the advancement of dressing tool **50** and wheel slide **9** and the transverse movement of the slide **29**, is repeated.

When the specific vibration characteristic of said engagement is detected by the vibration detector **53** concurrently with the location of the dressing tool **50** at the midpoint of the face of the grinding wheel, that is, when the limit switch LS–2 is actuated, the transverse movement of the slide **29** is completed at the left- or right-hand end thereof, whereby the wheel slide **9** and dressing tool **50** are advanced only by the amount equal to the wear of grinding wheel **16**. Thereafter, the traverse table **60** is shifted by the pulse motor PM–3 (not shown) so that the second position **65***b* of the workpiece **65** is aligned with grinding wheel **16**. In accordance with the data on tape **66**, the second portion **65***b* is ground in the same manner as in the case of the first portion **65***a* of the workpiece **65**. After the grinding operation on the second portion **65***a*, the position-compensating operation is effected in the same manner as above described, and thus, the wheel slide **9** and the dressing tool **50** are advanced by an amount equal to the wear of grinding wheel **16**. After that, the third portion **65***c* of the workpiece **65** is also machined in accordance with the data on the tape **66**. When the machining operation on the third portion **65***c* is completed, the position-compensating operation is effected in the same manner as before.

When a dressing operation for grinding wheel **16** is required, the operator of the associated machine tool pushes a button on control panel **79**, whereby the main control circuit **74** supplies a dressing feed signal to the additional pulse generator **78** and a command signal to control circuit **68** through auxiliary circuit **73**. Accordingly, the additional pulse generator **78** supplies output control circuit **71** with a predetermined number of electric pulses corresponding to dressing feed of the dressing tool **50**, and control circuit **68** furnishes a selective signal and a directional signal to output control circuit **71**, which supplies the drive units **72***a*, **72***b* with the directional signal and the electric pulses furnished from

the additional pulse generator **78** so as to operate the pulse motors PM–**1**, PM–**2**, whereby dressing tool **50** and wheel slide **9** are advanced by a predetermined amount, for example, 0.01 millimeter or 0.02 millimeter. With the completion of the advancement of dressing tool **50** and wheel slide **9**, the main control circuit **74** issues electric signals to close the bypass valve **59** and to operate changeover valve **57** to change the direction of the pressure fluid. Thus, the fluid flow out of the cylinder **30** is reduced by the variable throttle valve **58**, and the slide **29** is transversed at a lower speed so that the surface of the grinding wheel **16** is dressed by the dressing tool **50** carried by the slide **29**.

According to the present invention, when the machining operation on every one of the portions **65***a*, **65***b* and **65***c* is completed, the dresser slide **29** is traversed at a rapid speed until the vibration detector **50** detects the engagement between the grinding wheel **16** and the dressing tool **50**, and after every transverse movement of the dresser slide **29** the wheel slide **9** and the dressing tool **50** are advanced by the same amount. Thus, degeneration of machining accuracy due to wear of the grinding wheel **16** is eliminated because the wheel slide **9** is advanced by the same amount as the grinding wheel wear. At the same time, a high machining accuracy is obtained in a very inexpensive manner, since in accordance with the present invention the machining accuracy is the same or better than that obtained without using a relatively expensive sizing device. Furthermore, since the advancement movement of the dressing tool **50** in the position-compensating operation for wheel slide **9** is small, for example, 1 micron, the surface of grinding wheel **16** is not damaged by the dressing tool **50**, even if the dressing tool **50** is rapidly traversed across the surface thereof. The transverse movement of the dresser slide **29** to compensate for the wear of the grinding wheel **16** may be effected while the wheel slide **9** is being retracted to the original position thereof, while the workpiece is being loaded or unloaded, or while the traverse table is being indexed, since it does not take much time to traverse the dresser slide **29**, because of the rapid transverse speed thereof.

While the foregoing description is concerned with a preferred embodiment of the present invention, it will be evident to those skilled in the art that various changes and modifications may be made therein without departing from the basic principle of the invention, and that the appended claims are intended to cover all such changes and modifications as fall within the spirit and scope of the invention.

What is claimed is:

1. A grinding machine provided with an apparatus for compensating for the wear of its grinding wheel comprising; a bed, a work support slidably mounted on said bed to support a workpiece thereon, a wheel slide slidably mounted on said bed and mounting a rotatable grinding wheel for effecting a grinding operation on the workpiece, first feeding means for moving said wheel slide toward and away from the workpiece on said work support, a guide mounted on said wheel slide parallel to the axis of said grinding wheel, a slide slidably mounted on said guide, reciprocating means for moving said slide transversely of the surface of the grinding wheel, a dressing tool holder slidably mounted on said slide and having a dressing tool thereon, second feeding means for moving said holder and dressing tool toward and away from the surface of the grinding wheel, detecting means mechanically connected with said dressing tool and operative to generate an electric signal corresponding to the vibrations produced by the engagement of the dressing tool with the surface of said grinding wheel during the transverse movements of the slide, and control means for automatically operating said second feeding means to advance said holder and dressing tool toward the surface of the grinding wheel a predetermined amount at each transverse movement of the slide until the generation of said electric signal and for simultaneously automatically operating said first feeding means to advance said wheel slide and grinding wheel toward the workpiece the same predetermined amount equal to that of the holder and dressing tool.

2. A grinding machine provided with an apparatus for compensating for the wear of its grinding wheel as claimed in claim i, wherein speed control means is connected to said reciprocating means and operative to change the moving speed of said slide at slow and rapid speeds, said slide being moved at a slow speed during a wheel-dressing operation and at a rapid speed when the second feeding means is operating to advance the dressing tool and the latter has not yet contacted the grinding wheel.

3. A grinding machine provided with an apparatus for compensating for the wear of its grinding wheel as claimed in claim **1**, wherein said detecting means comprises ferroelectric substance sandwiched between a pair of electrodes and is capable of changing a vibration caused by the engagement between said dressing tool and the surface of said grinding wheel into an electric signal.

4. A grinding machine provided with an apparatus for compensating for the wear of its grinding wheel as claimed in claim **1**, wherein said guide is pivotally mounted on said wheel slide to vary its angle with respect to the axis of said grinding wheel.

5. A grinding machine provided with an apparatus for compensating for the wear of its grinding wheel as claimed in claim **1**, wherein said apparatus is further provided with sensing means for confirming that said dressing tool is located on or above the surface of said grinding wheel, and said detecting means is operable to sense the engagement between the grinding wheel and the dressing tool only at the time when the dressing tool is located against the surface of said grinding wheel.

6. A grinding wheel provided with an apparatus for compensating for the wear of its grinding wheel as claimed in claim **1**, wherein said control means further comprises an additional pulse generator which supplies a predetermined number of electric pulses to said first and second feeding means until said detecting means senses the engagement between said grinding wheel and said dressing tool.

* * * * *

UNITED STATES PATENT OFFICE

CERTIFICATE OF CORRECTION

Patent No. 3,641,714 Dated February 15, 1972

Inventor(s) Hiroaki Asano

It is certified that error appears in the above-identified patent and that said Letters Patent are hereby corrected as shown below:

Column 3, line 68, "motor" should read -- motors -- . Column 5, line 2, "with selective direction" should read -- with selective and directional -- ; line 62, "39-R" should read -- 30-R -- ; line 64, "50 is fixed" should read -- 50 fixed -- ; line 70, "53 is fixed" should read -- 53 fixed -- . Column 6, line 29, "LS-1 and" should read -- LS-1 at -- . Column 8, line 3, "i" should read -- 1 -- .

Signed and sealed this 14th day of November 1972.

(SEAL)
Attest:

EDWARD M.FLETCHER,JR.
Attesting Officer

ROBERT GOTTSCHALK
Commissioner of Patents

FORM PO-1050 (10-69)

USCOMM-DC 60376-P69
* U.S. GOVERNMENT PRINTING OFFICE : 1969 O—366-334.