(No Model.) 3 Sheets—Sheet 1.

N. H. BRUCE.

TRIMMING ATTACHMENT FOR MACHINES FOR SEWING LOOPED FABRICS.

No. 456,012. Patented July 14, 1891.

Fig. 1.

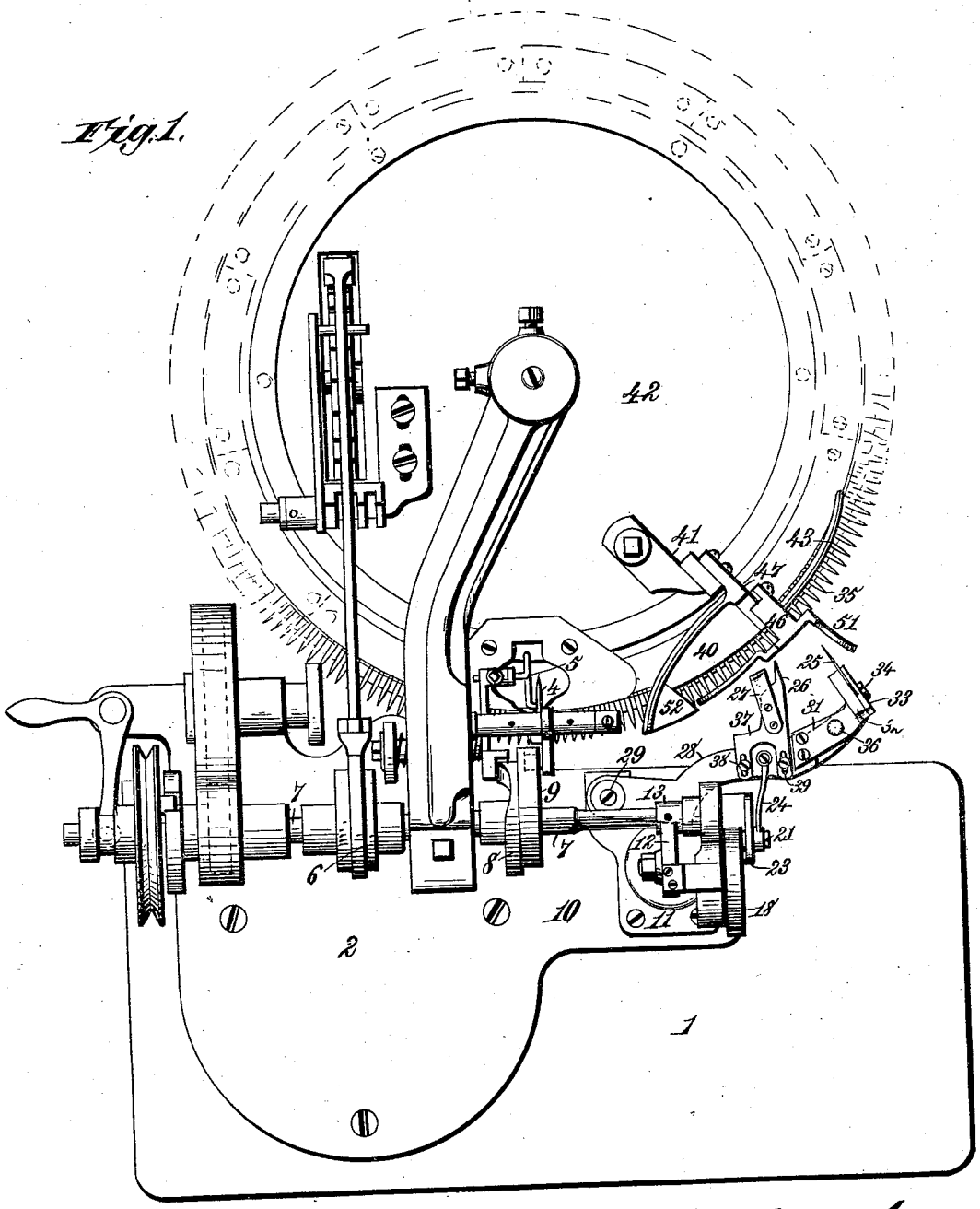

Witnesses.
Robert Everett.
J. G. Meyers Jr.

Inventor.
Norman H. Bruce.
By James L. Norris.
Atty.

THE NORRIS PETERS CO., PHOTO-LITHO., WASHINGTON, D. C.

(No Model.) 3 Sheets—Sheet 2.

N. H. BRUCE.

TRIMMING ATTACHMENT FOR MACHINES FOR SEWING LOOPED FABRICS.

No. 456,012. Patented July 14, 1891.

Fig. 2.

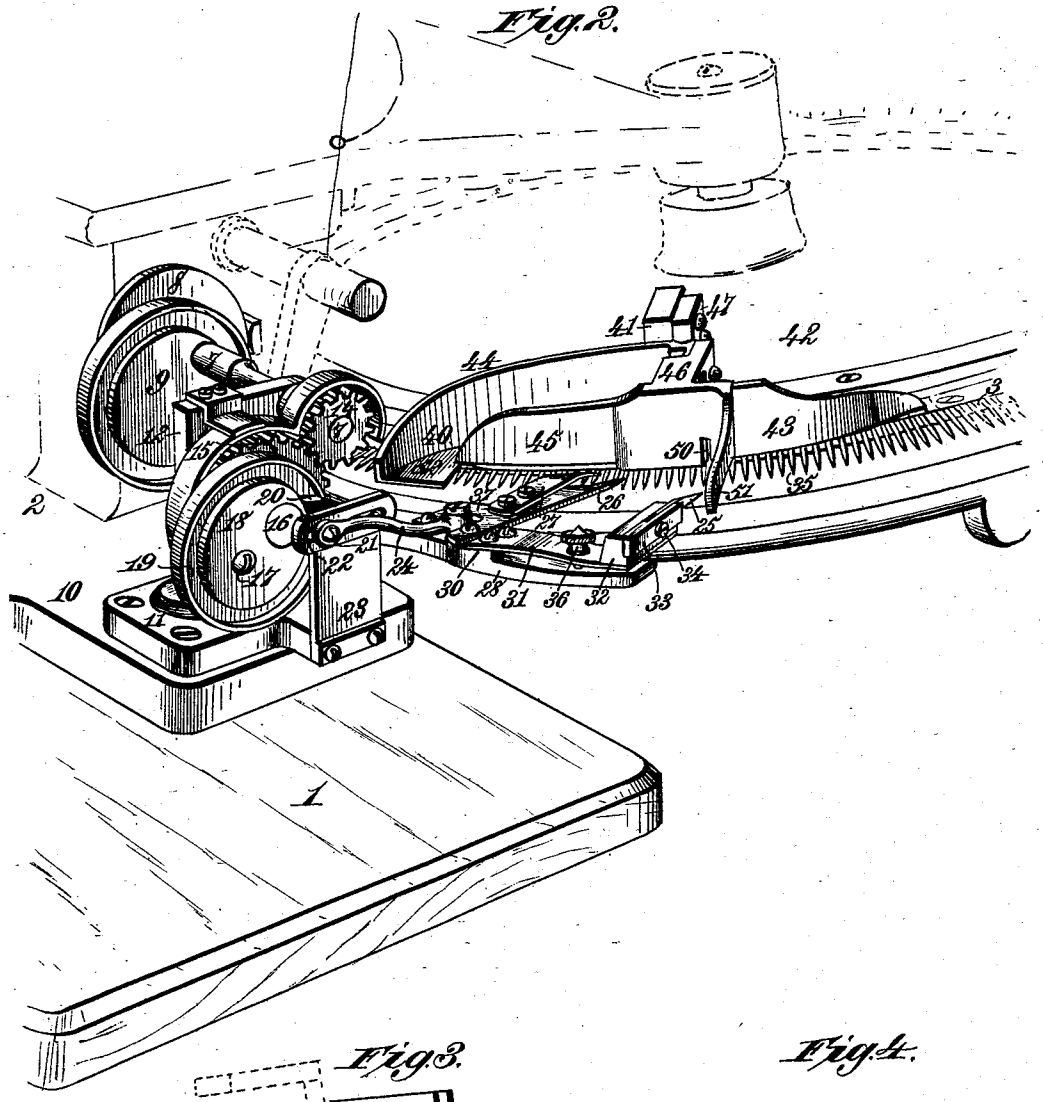

Fig. 3.

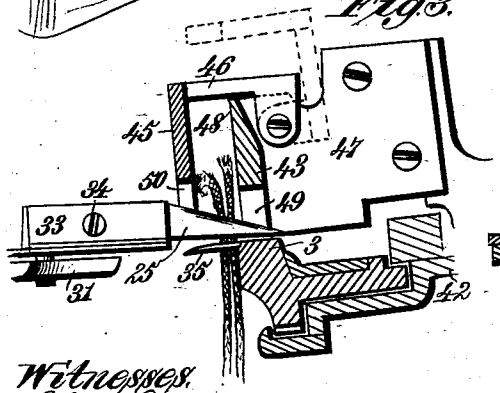

Fig. 4.

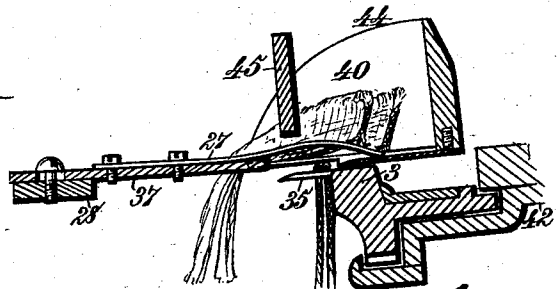

Witnesses:
Robt Ewett
J. G. Meyers Jr.

Inventor:
Norman H. Bruce.
By James L. Norris
Atty

THE NORRIS PETERS CO., PHOTO-LITHO., WASHINGTON, D. C.

(No Model.) 3 Sheets—Sheet 3.

N. H. BRUCE.

TRIMMING ATTACHMENT FOR MACHINES FOR SEWING LOOPED FABRICS.

No. 456,012. Patented July 14, 1891.

Fig. 5.

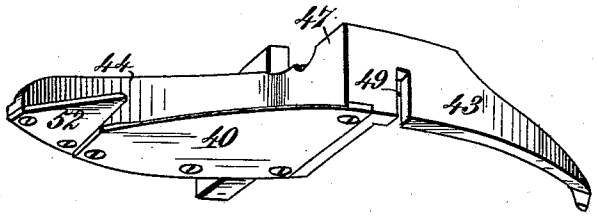

Fig. 6.

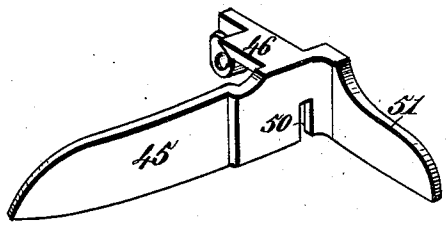

Fig. 9.

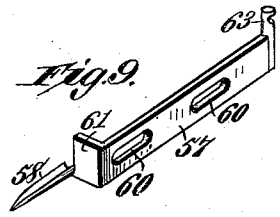

Fig. 7.

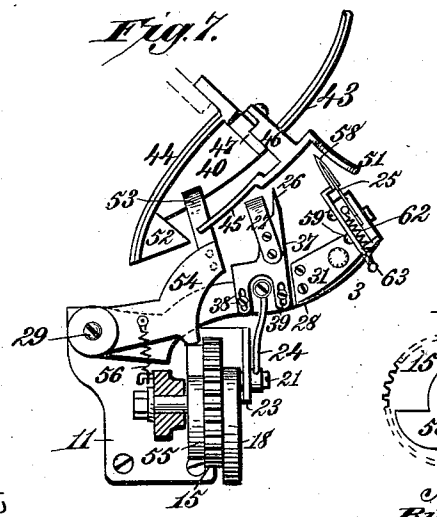

Fig. 8.

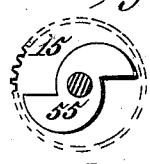

Witnesses.
Robt. Gerald
J. G. Meyers Jr.

Inventor.
Norman H. Bruce.
By James L. Norris.
Atty.

THE NORRIS PETERS CO., PHOTO-LITHO., WASHINGTON, D. C.

UNITED STATES PATENT OFFICE.

NORMAN H. BRUCE, OF WATERFORD, ASSIGNOR OF SEVEN-TENTHS TO ALFRED G. PECK, GEORGE H. MORRISON, AND CHARLES P. KIMBALL, ALL OF LANSINGBURG, NEW YORK.

TRIMMING ATTACHMENT FOR MACHINES FOR SEWING LOOPED FABRICS.

SPECIFICATION forming part of Letters Patent No. 456,012, dated July 14, 1891.

Application filed October 3, 1890. Serial No. 366,931. (No model.)

To all whom it may concern:

Be it known that I, NORMAN H. BRUCE, a citizen of the United States, residing at Waterford, in the county of Saratoga and State of New York, have invented new and useful Improvements in Trimming Attachments for Machines for Sewing Looped Fabrics, of which the following is a specification.

My invention relates to trimming attachments for that class of machines for sewing looped fabrics which are commonly known as "turning-off machines;" and it has for its object to improve the construction, arrangement, and operation of the trimming and clearing devices in such a manner as to cause them to leave clean smooth edges to facilitate uniting said fabrics by the usual sewing mechanism forming part of the circular-looping machine.

The invention consists in the several novel features of construction and in the combination and relative arrangement of parts pertaining to the trimming and clearing mechanism of a turning-off machine, as hereinafter fully described, and then definitely pointed out in the claims following this specification.

In the annexed drawings, illustrating my invention, Figure 1 is a plan of a turning-off machine embodying my improvements in the arrangement of and means for operating the trimming and clearing attachments. Fig. 2 is a perspective of a portion of a turning-off machine provided with my improved trimming and clearing devices. Fig. 3 is an enlarged vertical section of the rotary annular pin-plate and the waste trough and guides in the path of the longitudinally reciprocating trimming device or cutter, which is shown in side elevation. Fig. 4 is an enlarged vertical section of the same in the path of the clearing devices that are shown in side view. Fig. 5 is a perspective of the waste-trough viewed from the under side and attached to the stationary guides that form part of said trough. Fig. 6 is a perspective of the pivoted waste-guide and attached cutter-guard. Fig. 7 is a detail plan of a portion of the machine, showing the arrangement of a supplemental clearing device and its operating mechanism, and also a grooved guide-point for the cutter. Fig. 8 is a side view of the cam-gear for imparting to the supplemental clearing-plate two forward movements during a single reciprocating movement of the principal clearing devices. Fig. 9 is a perspective of the grooved guide-point for the cutter and its yielding or longitudinally sliding support.

Referring to the drawings, the numeral 1 designates a suitable table or stand by which the machine is supported. To the top of this table or stand is securely fastened a metal bed-plate 2, that forms part of the frame-work of a turning-off machine of ordinary and well-known construction comprising the rotary annular pin-plate 3, and a sewing mechanism of which the needle 4 and looper 5 are parts. The annular pin-plate 3 is rotated in the usual manner from an eccentric 6 on the main shaft 7, which also carries a cam 8 for actuating the looper 5 and an eccentric 9 for reciprocating the needle 4, and as these devices and the necessary connecting mechanism are all well known and form no part of my invention further explanation thereof is deemed unnecessary.

In order to afford a rigid supporting-base for attachment of my improved trimming and clearing devices and provide a complete, compact, and properly-connected machine, the bed-plate 2 is preferably provided on the side adjacent to the sewing mechanism with a lateral extension 10, to the top of which a supplemental base 11 is firmly secured. The supplemental base 11 has a standard 12, which is provided with a bearing 13, for the extended end of the main shaft 7, as shown in Fig. 1, and on the end of the said shaft, as shown in Fig. 2, is a pinion 14, that meshes with a gear-wheel 15, loosely mounted on a stud 16, projecting horizontally from the standard. Secured to the gear-wheel 15 by a screw 17 or otherwise is an eccentric 18, which is also loose on the stud 16, and is provided with a cam-race 19 on its outer face. The cam-race 19 receives a block 20, having a suitable stud or wrist-pin 21, that is passed through a horizontal guide-slot 22 at the top of a standard 23, supported by the base 11, said stud or wrist-pin being connected on the outer side of the standard 23 to a pitman 24,

through which motion is imparted to the trimming-cutter and principal clearing devices, as will be presently explained.

The cutter 25 and the horizontal clearing-finger 26 and clearing-plate 27 are carried by a horizontal arm 28, that is pivoted to a vertical stud 29 on the supplemental base 11, as shown in Fig. 1, and, as shown in Figs. 1 and 2, this arm 28 is connected with the pitman 24, that is actuated by the eccentric 18 and gear 15 from the pinion 14 on the main shaft of the turning-off machine.

To a ledge 30 on the upper side of the arm 28 is secured one end of a spring-plate 31, to the outer end of which is secured a bearing-block 32, that projects above said spring-plate. The knife or cutter 25 is clamped between the block 32 and a plate 33, that is secured to the outer side of said block by a screw 34, so as to permit the removal and replacement of the cutter and its adjustment in proper position to accomplish its required work. The unsharpened lower edge of the cutter 25 is straight, as shown in Figs. 2 and 3, and is adapted to pass above and in line with the pin-points 35 on the periphery of the annular pin-plate 3 without cutting or disturbing the loops through which the fabrics are impaled, while the upper edge of said cutter is sharpened and beveled off to a point to engage and cut only the loops above those pin-points by which the fabrics are held. By mounting the cutter 25 on a spring-plate 31 it is enabled to yield to any slight irregularity of the pin-points, which are not always precisely on the same level, and it will thus be seen that liability of injury to the cutter from forcible contact with an improperly-set pin-point will be avoided. The spring-plate 31 being attached to the ledge 30 is thereby supported slightly above the arm 28 or at a sufficient height to allow for a suitable range of adjustment by means of a thumb-screw 36, which engages a perforation in the outer portion of the spring-plate and bears on the arm 28 beneath said plate.

At a suitable point on the arm 28 is attached an adjustable plate 37 by means of screws 38 passed through slots 39 in one end of said plate, and so arranged with relation to the arm 28 as to permit adjustment of the plate 37 to and from the annular pin-plate. On the forward end of the adjustable plate 37 and at one side thereof is formed a pointed clearing-finger 26, that is adapted to loosen that portion of the thread or yarn which is between two cut loops, and so facilitate the disengagement of the waste or trimmed-off portion of the fabric. To the adjustable plate 37 is secured at a suitable angle a clearing-plate 27 for pushing off and completing the disengagement of the waste.

The waste pan or trough 40 is secured to a lug 41 on a stationary disk or circular plate 42, that is encircled by the rotary annular pin-plate. This waste-trough is provided with the stationary oppositely-curved guides 43 and 44 and a pivoted guide 45, having an arm 46, by which it is pivotally supported at the rear or inner end 47 of the trough. By referring to Figs. 1, 2, 5, and 6 the form and position of the waste-trough and attached guides will be readily understood. The arm 46 of the pivoted guide 45 is extended above and across the forward end of the guide 43, and is pivoted to the outer side of the closed trough end 47, as shown in Fig. 3, and, as will be also seen in this figure, the arm 46 is of such length as to allow for an open space or passage 48 between the guides 43 and 45 at the point where they lap by each other. This space 48 affords a passage into the trough for the partly separated waste of the fabric or fabrics after being acted on by the cutter. In the lower edge of the guide 43 is a slot 49, that coincides with a similar slot 50 in the lower edge of the pivoted guide 45, thus affording a passage for the cutter 25, as shown in Fig. 3, when it is actuated to engage and sever the loops of the fabric above those by which it is held on the pin-plate. On the pivoted guide 45 is a cutter-guard 51, that projects on the outer side of the cutter to protect its point and to prevent any liability of the hand of the operator coming in contact with said cutter while attaching fabrics to the pin-points during the operation of the machine. By pivotally supporting the guide 45 and attached cutter-guard 51 they can be readily raised and thrown back, as shown by dotted lines in Fig. 3, whenever it is necessary to have access to the cutter and clearing devices for adjustment or repairs. By reference to Figs. 2 and 4 it will be seen that the guides 44 and 45 form opposite sides of the waste-trough 40, and it will be seen also that while the stationary guide 44 and the floor or bottom of the trough are rigidly connected by a closed joint the lower edge of the pivoted guide 45 does not extend quite to or level with the bottom of the trough, but is so arranged as to afford a space or opening between said guide and trough-bottom, as shown in Fig. 4, to permit the required action of the clearing devices.

It will be understood that the fabrics to be trimmed and sewed—such, for instance, as the sleeves and cuffs of knit underwear—are placed on the pin-points 35 in the usual manner, one over the other, as shown in Fig. 3, which can be done with ease during the movement of the annular pin-plate, so that there is no need of stopping the machine either to attach or remove the fabrics. The annular pin-plate 3 is rotated intermittently by its actuating mechanism driven in the usual manner from the shaft 7, from which the trimming, clearing, and sewing mechanisms are also actuated. By the swinging action of the horizontal arm or lever 28, operated from the extended end of the shaft 7 through the connecting mechanism and gearing hereinbefore described, the cutter 25 is swung in the arc of a circle in a horizontal plane to and from

the fabric on the pin-plate. The cutter is so arranged and adjusted as to pass above and in line with a pin-point and engage the next loop above the one impaled on the pin, and in passing through the fabric the beveled and sharpened upper edge of the cutter severs only the loop required to be cut and does not break or disarrange those loops through which the fabric is supported. Should any pin-point be elevated out of line by reason of defective setting or otherwise, so as to be struck by the lower edge of the cutter, the spring-plate 31, on which said cutter is mounted, will enable it to yield and rise sufficiently to pass along the pin-point without injury to either the cutter or fabric and without liability of engaging and severing the wrong loop. It is also obvious that as the cutter 25 is arranged to swing in the arc of a circle in a horizontal path all liability of its engaging the loop on the pin is avoided, even should said loop not be set well back, thus avoiding an accident sometimes caused by improper placing of the fabric in machines in which the cutter swings vertically in an arc of a circle. As the continued intermittent rotation of the annular pin-plate carries the fabric loop by loop to the action of the cutter the waste, or that portion of the fabric above the line of severed loops, is carried through the passage 48 into the trough 40, and in line with the inner face of the pivoted guide 45, which forms the front of said trough. The lapping-by portions of the guides 43 and 45, in which the coinciding slots 49 and 50 are formed, serve to support the fabric that has been acted on by the cutter and direct it through the passage 48 into the waste-trough. In passing through the trough and adjacent to the inner face of the guide 45 the portions of thread or yarn between the severed loops are first loosened by the clearing-finger 26, and the waste is then pushed off and separated from the main portion of the fabric by the action of the clearing-plate 27, so as to leave the severed edges of the fabrics smooth and clean, in condition to be united in the usual manner by the sewing mechanism, to which the trimmed fabrics are at once carried by the continued rotation of the pin-plate. It will be observed that the guide 44 is curved outward diagonally across the annular pin-plate and attached pin-points in such a manner as to prevent the waste from being carried to the sewing mechanism and to cause its discharge from the machine as soon as it passes the end of the guide 45, which extends a sufficient distance to prevent the severed waste from falling onto the clearing devices. The principal portion of the trough-bottom 40 extends only a slight distance over the pin-points 35, so as to afford space between said trough-bottom and the guide 45 to facilitate action of the clearing devices, but at the exit end of the trough-bottom is a horizontal wing 52, that projects beyond the pin-points and serves to support the waste that is passing out of the trough and so prevent its entanglement with the points of the pins. The clearing devices as well as the cutter are arranged to operate in horizontal planes in such a manner as to avoid any upward pull or strain on the fabrics, the edges of which are thus maintained in proper position for being united by the sewing mechanism. It will be seen that the trimming and clearing devices and their operating mechanism are arranged in such position with relation to the sewing mechanism and annular pin-plate as to afford at all times ready access to the needle and looper for the purpose of making any necessary adjustments; and this arrangement is so accomplished as not to detract from the compactness of the machine. Although the trimming and clearing mechanisms are shown as mounted on an extension of the main bed-plate 2 and forming part of the complete turning-off machine, it is obvious that said trimming and clearing devices and their operating mechanism can be readily supported on a separate base for attachment to any circular-looping machine, in which no change would be required, except to lengthen the driving-shaft.

It may sometimes be desirable to provide a machine of this character with a supplemental or auxiliary clearing plate or pusher 53, Fig. 7, which can be secured to a short horizontal lever-arm 54, fulcrumed on the stud 29 above the lever-arm 28, that carries the cutter and principal clearing devices, hereinbefore described. The lever-arm 54 is actuated in a forward direction by a cam 55 on one side of the gear-wheel 15 and is drawn back for the next stroke by means of a spiral spring 56. The auxiliary clearing plate or pusher 53 is arranged to act upon the waste near the exit end of the trough 40 and serves to facilitate the disengagement and discharge of the waste from the machine. As shown in Figs. 7 and 8, the cam 55 is so formed and arranged as to act on the lever 54 twice during each revolution of the gear-wheel 15, and so impart to the auxiliary clearing plate or pusher 53 two forward strokes for each reciprocation of the principal clearing devices.

In some instances it is preferable to attach to the cutter bearing-block 32 a yielding or longitudinally-sliding frame 57, having at its forward end, as shown in Figs. 7 and 9, a grooved guide-point 58 for the cutter 25, to facilitate its engagement with the loop to be severed and to serve as a protector for the loop on the pin-point. The sliding frame or plate 57 is attached to the inner side of the block 32 by means of screws 59, passed through slots 60, formed in said plate, so as to allow for its necessary longitudinal movement. The cutter-guard point 58 is attached to the lower outer corner of an offset or shoulder 61 on the forward end of the plate 57, and in the top of the said guard-point is a longitudinal groove to receive the lower edge of the cutter. The plate or frame 57 is normally advanced by means of the traction of a spring 62, one

end of which is attached to a stud 63 on said plate and the other end secured to the block 32 by which the cutter is carried. By the action of the spring 62 the plate or frame 57 is drawn forward, so as to carry the extremity of the guard-point 58 in advance of the cutter, so that when the machine is operated the said guard-point will be in position to enter the loop to be severed and will pick up and expand said loop in such a manner as to present it properly to the cutting-edge of the cutter. When the grooved guard-point 58 has passed through the loop, the shoulder or offset 61 of the plate 57 will be in contact with the outer face of the guide 45, and the said plate 57 and guard 58 will then remain at rest, while the continued forward movement of the lever-arm 28 and block 32 will carry the cutter forward along the grooved guard 58 to sever the loop. On the return of the lever-arm 28 and connected parts the sliding plate 57 and attached cutter-guard point 58 will resume their former position in readiness for further action on the next forward stroke of the cutter.

What I claim as my invention is—

1. In a machine for trimming and sewing looped fabrics, the combination, with an intermittently-rotating pin-plate having pin-points, of a pivoted arm swinging in the arc of a circle in a horizontal plane parallel with the plane of the pin-points, a cutter carried by the arm and having an upper sharpened edge beveled to a point to sever a loop by the horizontal movement of the arm, and a clearing device mounted on the arm between its pivotal point and the cutter, substantially as described.

2. In a machine for trimming and sewing looped fabrics, the combination, with an intermittently-rotating pin-plate having pin-points, of a pivoted arm swinging in the arc of a circle in a horizontal plane parallel with the plane of the pin-points, a cutter carried by said arm and having an upper sharpened edge, and a clearing-finger and a clearing-plate, both secured to and moving in a horizontal plane with the swinging-arm, substantially as described.

3. In a machine for trimming and sewing looped fabrics, the combination, with an intermittently-rotating pin-plate having pin-points, of a pivoted arm swinging in the arc of a circle in a horizontal plane parallel with the plane of the pin-points, a spring-plate secured at one end to the arm and provided with a device for adjusting its opposite free end in a vertical plane to different heights relatively to the arm, and a cutter supported and carried by the free end of the spring-plate and adapted to yield vertically with said spring-plate, substantially as described.

4. In a machine for trimming and sewing looped fabrics, the combination of an intermittently rotary pin-plate, a horizontally-swinging arm carrying a cutter, clearing devices mounted to reciprocate in a horizontal path to and from the pin-plate, and a waste-trough supported above the periphery of the pin-plate and provided with a pivoted cutter-guard, substantially as described.

5. In a machine for trimming and sewing looped fabrics, the combination, with an intermittently-rotating pin-plate having pin-points, of an arm movable in a horizontal plane, a spring-plate secured at one end to the arm and provided with a device for adjusting its opposite free end in a vertical plane to different heights relatively to the arm, and a cutter supported and carried by the free end of the spring-plate and adapted to yield vertically with said spring-plate, substantially as described.

6. In a machine for trimming and sewing looped fabrics, the combination of an intermittently-rotary pin-plate, a cutter and clearing devices mounted to reciprocate in a horizontal path to and from the pin-plate, a waste-trough supported above the periphery of the pin-plate and provided with openings for passage of the cutter and clearing devices, and a pivoted guide attached to said waste-trough and provided with a cutter-guard, substantially as described.

7. In a machine for trimming and sewing looped fabrics, the combination, with the cutter and the principal clearing devices, of a supplemental or auxiliary clearing device and mechanism for reciprocating said cutter and clearing devices in a horizontal path, substantially as described.

8. In a machine for trimming and sewing looped fabrics, the combination, with a cutter mounted to reciprocate in a horizontal path, of a longitudinally-grooved cutter-guard point and a longitudinally-sliding plate or frame on which said guard-point is carried beneath and in line with the lower edge of the cutter, substantially as described.

9. In a machine for trimming and sewing looped fabrics, the combination, with a cutter mounted to reciprocate in a horizontal path, of a longitudinally-grooved cutter-guard, in which the lower edge of said cutter is located, a sliding plate or frame for supporting and carrying the cutter-guard, and a spring for drawing said frame forward normally to carry the guard-point in advance of the cutter, substantially as described.

10. In a machine for trimming and sewing looped fabrics, the combination, with an intermittently-rotating pin-plate having pin-points, of an arm movable in a horizontal plane parallel with the plane of the pin-points, a spring-plate secured at one end to the arm and having its opposite end free to yield vertically, a set-screw connecting the arm with the free end portion of the spring-plate for adjusting the latter in a vertical plane to different heights relatively to the arm, and a cutter supported and carried by the free end portion of the spring-plate and yielding vertically therewith, substantially as described.

11. In a trimming attachment for circular-

looping machines, the combination of the horizontally-swinging lever-arms 28 and 54, pivoted coincidently to a supporting base-plate, the cutter 25 and clearing devices 26 and 27, mounted on the arm 28, the auxiliary clearing device 53, mounted on the arm 54, and means for actuating said arms in such a manner as to impart two movements to the auxiliary clearing device during one movement of the principal clearing devices, substantially as described.

12. In a trimming attachment for circular-looping machines, the combination, with the horizontally-swinging arm 28 and the yielding cutter 25, mounted on said arm to reciprocate in a horizontal path, of the sliding frame 57, the cutter-guard point 58, carried by said frame, and the spring 62, substantially as described.

13. In a machine for trimming and sewing looped fabrics, the combination, with an intermittently-rotating pin-plate having pin-points, and a movable cutter for severing the loops, of a waste-trough composed of a pivoted guide 45, vertical side pieces 43 and 44, connected by a bottom wall, and a horizontal wing 52, arranged in the plane of the bottom wall of the trough and projecting over the pin-points to support and carry the waste material over the latter, substantially as described.

In testimony whereof I have affixed my signature in presence of two witnesses.

NORMAN H. BRUCE.

Witnesses:
JAMES A. RUTHERFORD,
EWELL A. DICK.