Aug. 26, 1969 N. A. ZAGOTTA ET AL 3,463,325

PALLET RACK BEAM RETAINER

Filed June 22, 1967

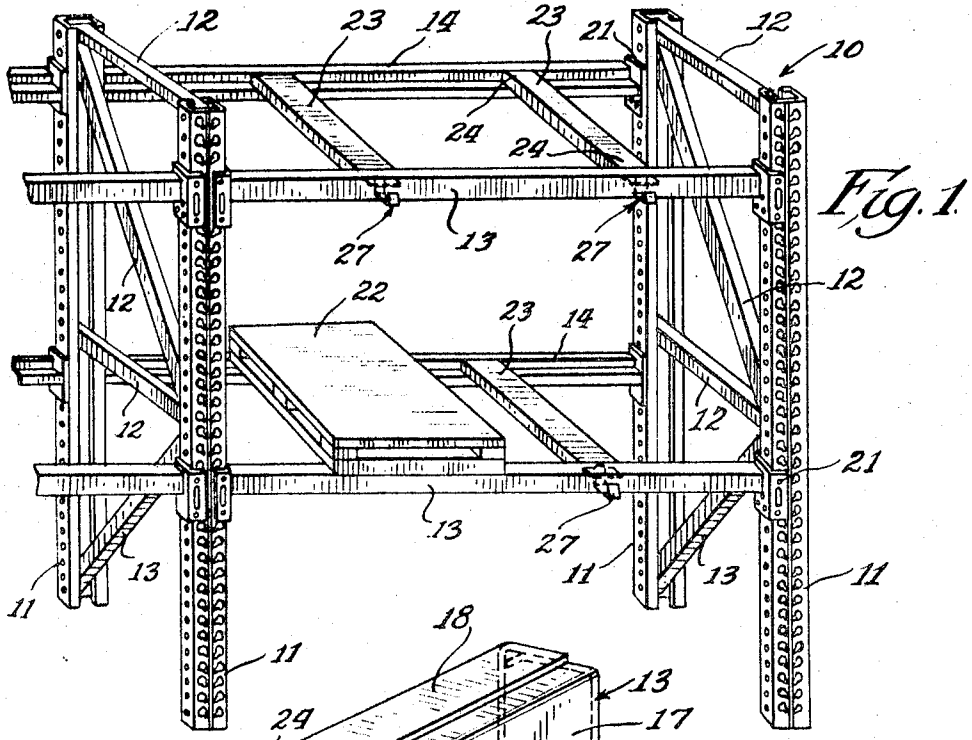

Fig. 1.

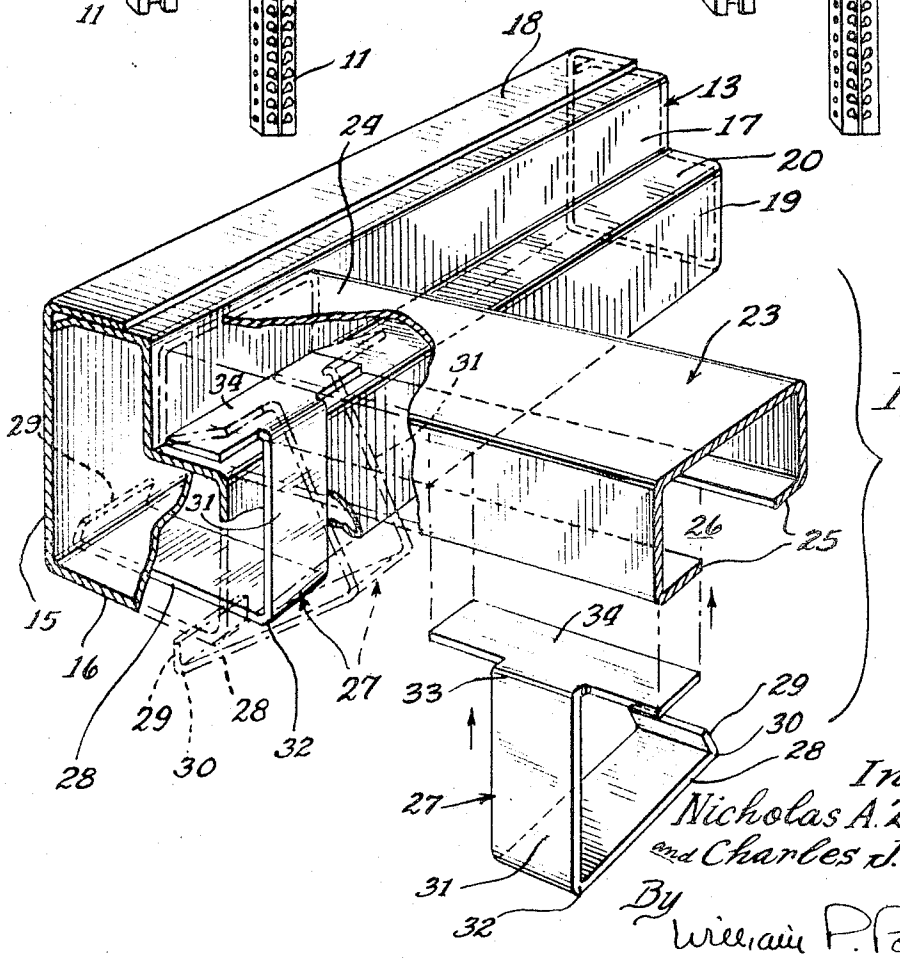

Fig. 2.

Inventors
Nicholas A. Zagotta
and Charles J. Rogers
By
William P. Porcelli
Attu.

United States Patent Office 3,463,325
Patented Aug. 26, 1969

3,463,325

PALLET RACK BEAM RETAINER

Nicholas A. Zagotta and Charles J. Rogers, Chicago Heights, Ill., assignors to Interlake Steel Corporation, Chicago, Ill., a corporation of New York

Filed June 22, 1967, Ser. No. 648,005
Int. Cl. A47f 5/00, 5/10
U.S. Cl. 211—148 8 Claims

ABSTRACT OF THE DISCLOSURE

A rack structure including a plurality of uprights carrying front and rear transverse beams and one or more front to rear support members removably secured to the beams by readily installable and removable retaining members.

This invention relates to support structures and in general to collapsible rack structures for supporting loads, such as paletized loads.

In the McConnell Patent 3,303,937, issued Feb. 14, 1967 and owned by the assignee hereof, an improved pallet rack structure for use in supporting palletized loads is disclosed. The present invention comprehends the provision in such a pallet rack structure of new and improved means for releasably retaining the front to rear members on the transverse beams. Thus, in the McConnell patent the front to rear members are maintained in resting association with the transverse beams permitting at times undesirable movement thereof and not providing any substantial rigidifying of the pallet rack structure. The present invention comprehends an improved rack structure including retaining members effectively releasably retaining the front to rear members in association to the transverse means and providing rigidifying of the pallet rack structure.

Thus, a principal feature of the present invention is the provision of a new and improved rack structure.

Another feature of the invention is the provision of such a rack structure having new and improved means for releasably retaining a front to back support member in association with front and rear transverse beams.

A further feature of the invention is the provision of such a rack structure having a new and improved releasable retaining member for effecting such support member retention.

A yet further feature of the invention is the provision of such a rack structure having new and improved means for effecting a desired rigidifying thereof.

Still another feature of the invention is the provision of such a rack structure wherein installation and removal of the retaining member may be readily effected.

A further feature of the invention is the provision of such a rack structure wherein the retaining member resiliently embracingly grips the beam members to provide improved retention while yet permitting facilitated installation or removal thereof.

Another feature of the invention is the provision of such a rack structure wherein the retaining member permits transverse adjustment of the support members on the beam members while maintaining retained association therebetween.

Other features and advantages of the invention will be apparent from the following description taken in connection with the accompanying drawing in which:

FIGURE 1 is a fragmentary front perspective view of a rack structure embodying the invention; and

FIGURE 2 is a fragmentary enlarged rear perspective view of a portion of the rack structure, with the retaining member illustrated in full lines in one position for

insertion into the support member, in dotted lines as during connection of the support member to the beam, and in full lines in the installed position, portions of the structure being cut away for facilitated illustration of the invention.

In the exemplary embodiment of the invention as disclosed in the drawing, a pallet rack structure generally designated **10** is shown to comprise a plurality of upright supports **11** interconnected by a plurality of front to back frame and diagonal frame members **12**. For a detailed description of the frame structure reference may be had to the above identified McConnell patent. As shown in FIGURE 1, the rack **10** further includes a plurality of transverse horizontally spaced front beams **13** and a plurality of transverse horizontally spaced rear beams **14**. As shown in FIGURE 2, beam **13** comprises a hollow L-shaped member having a front side **15**, a bottom **16**, a rear side **17** and a top **18**. The lower leg of the L-shaped beam effectively forms a shelf **19** defining an upper surface **20**. The beams **13** and **14** may be secured to the uprights **11** by suitable end plates **21**.

As shown in FIGURE 1, the beams **13** and **14** may be suitably spaced to carry pallets **22**. Further, rack structure **10** may be provided with a plurality of front to rear support members **23** which extend between the beams **13** and **14**, each having end portions **24** resting on the shelf portions **19** as illustrated in FIGURE 2. The support members may be utilized to support objects of different shapes and sizes to permit utilization of the rack **10** other than with pallets alone.

Referring to FIGURE 2, each support member **23** comprises a C-shaped channel having a bottom **25** and defining an undercut longitudinal slot **26** opening downwardly through the channel bottom **25**. Thus the bottom **25** effectively defines a pair of spaced inturned flanges.

As indicated briefly above, the support members **23** are retained on the shelves **19** of the beams **13** and **14** in resting engagement with the upper surface **20** thereof. The support member end **24** may be effectively locked to the beam by an improved retaining member generally designated **27**. More specifically, retaining member **27** comprises a clip member formed of a suitable material such as sheet metal and having a bottom portion **28**, a front turned portion **29** upstanding from a front edge **30** of the bottom **28**, and a rear flange **31** upstanding from a front edge **32** of the bottom **28** provided at its upper end **33** with a key or T-portion **34**. The front portion **29** and flange portion **31** extend convergingly toward each other at a small angle; in the illustrated embodiment the included angle of each of these members is slightly less than 90°. The retaining member is preferably formed of a resilient metal such as steel. The length of retaining member bottom **28** is preferably substantially equal to the width of the beam bottom **16** whereby the retaining member portions **28**, **29** and **31** resiliently snugly embrace the bottom of the beam in the installed arrangement of the retaining member as shown in FIGURE 2.

The width of the T-portion **34** of the retaining member is preferably only slightly less than the width of the slot **26** and the width of the T-portion **34** is preferably slightly less than the spacing between the bottom flanges **25**.

Thus, the locking of the support members **23** to the rack beams may be readily effected simply by firstly moving the T-portion **34** of the retaining member **27** upwardly into the slot **26** with the T-portion **34** extending parallel to the longitudinal extent of the slot. With the end **24** of the support member resting on the top surface **20** of the flange **19**, the retaining member is turned to dispose the T-portion **34** transversely to the support member in the slot **26** and moved to the end **24** with the bottom **28** swung to an inclined position to bring the front flange portion **29** to below the beam bottom **16**. The re-

taining member is then swung about a pivot axis defined by the line of engagement of the T-portion **34** with the support flanges at the rear side **17** of the beam **13** to bring the front flange portion **29** substantially to the front side **15** of the beam thereby to complete the embracing relationship of the retaining member with the bottom of the beam. The height of the rear flange **31** is substantially equal to the height of the shelf **19** plus the thickness of the retaining member flanges **25** to effectively retain the support member end **24** on the surface **20**.

Thus, the retaining member not only serves to lock the support members **23** to the beams but also effects the rigidifying of the rack structure **10**, further improving the usefulness and life thereof.

As the retaining member is frictionally retained in association with the beam, transverse adjustment of the support members may be effected by suitably sliding the members and the connected retaining members parallel to the longitudinal extent of the beam. To remove the support member **23** the user merely depresses the front flange portion **29** to below the bottom **16** of the beam, swings the retaining member to the inclined position shown in dotted lines in FIGURE 2 and after moving the retaining member rearwardly from the shelf **19** turns the retaining member 90° to arrange the T-portion parallel to the slot **26** whereupon the retaining member may be withdrawn downwardly from the slot.

I claim:

1. Rack structure comprising: a beam having a shelf portion, a support member having an end carried on the shelf portion and defining a slot opening in the support member, and a retaining member provided with a first wall, a second wall extending angularly from a portion of the first wall removably interlocked with the slot opening of the support member, and a flange portion extending angularly from a front edge portion of the retaining member first wall whereby the retaining member embraces the beam to lock the support member releasably

to the beam through contact of the first wall, the second wall and the flange portion along surfaces of the beam.

2. The rack structure of claim **1** wherein said retaining member is formed of a resilient material and said first and second walls extend convergingly to be biased against adjacent surfaces of the beam.

3. The rack structure of claim **1** wherein said support member comprises a C-shaped channel.

4. The rack structure of claim **1** wherein said retaining member comprises a formed sheet metal member.

5. The rack structure of claim **1** wherein said front flange portion of the retaining member upstands angularly rearwardly.

6. The rack structure of claim **1** wherein said second wall of the retaining member comprises a thin metal portion adapted to be inserted into said support member slot parallel thereto and to be turned 90° when received in said slot to be retained therein.

7. The rack structure of claim **1** wherein said beam comprises a member L-shaped in cross-section.

8. The rack structure of claim **1** wherein said second wall of the retaining member comprises a T-shaped portion.

References Cited

UNITED STATES PATENTS

2,674,431	4/1954	Attwood	211—134 XR
3,077,959	2/1963	McGow et al.	287—189.35
3,303,937	2/1967	McConnell	211—176 XR
3,252,679	5/1966	Bell	248—235

FOREIGN PATENTS

675,532	7/1952	Great Britain.

ROY D. FRAZIER, Primary Examiner

R. D. KRAUS, Assistant Examiner

U.S. Cl. X.R.

211—177; 287—189.35