No. 852,699. PATENTED MAY 7, 1907.

S. W. BONSALL.

KNOCKDOWN WARDROBE.

APPLICATION FILED MAY 16, 1906.

3 SHEETS—SHEET 1.

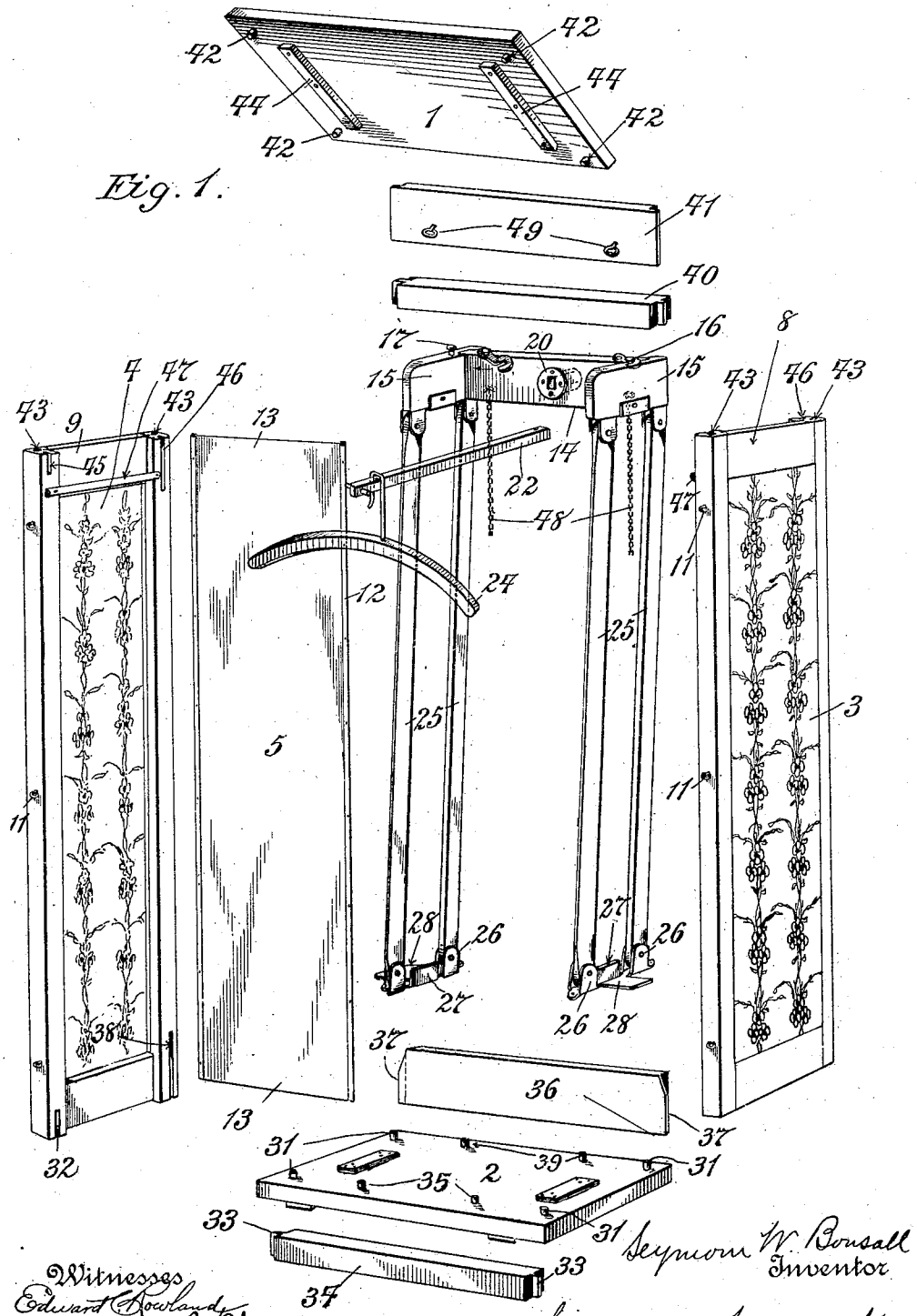

Fig. 1.

Witnesses
Edward Rowland
Kathryn B. Chevers.

Seymour W. Bonsall
Inventor

By his Attorney H. M. MacKaye

THE NORRIS PETERS CO., WASHINGTON, D. C.

No. 852,699. PATENTED MAY 7, 1907.

S. W. BONSALL.

KNOCKDOWN WARDROBE.

APPLICATION FILED MAY 16, 1906.

3 SHEETS—SHEET 2.

Fig. 2.

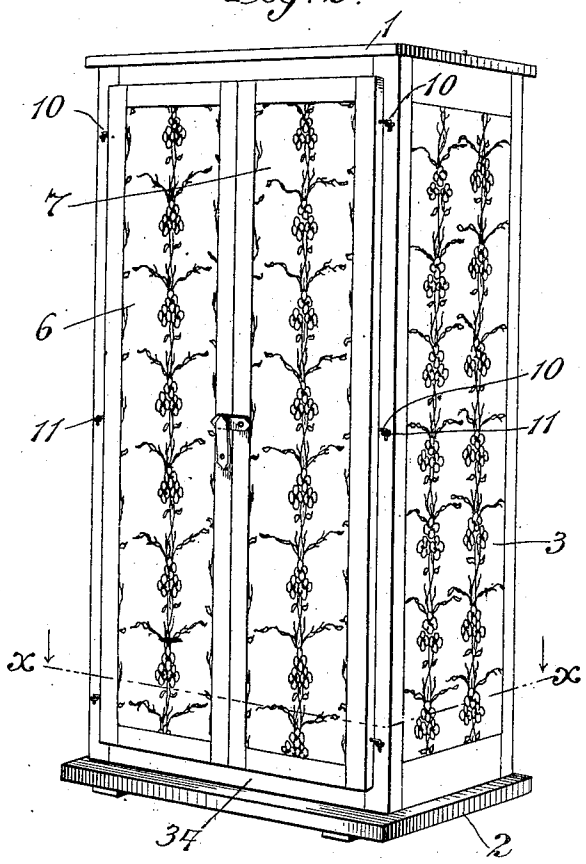

Fig. 3.

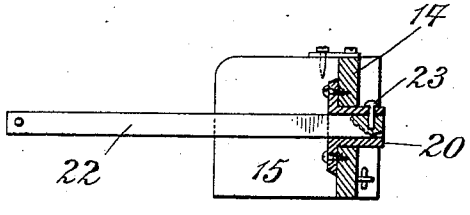

Witnesses
Edward Rowland
Kathryn B. Chevers

Seymour W. Bonsall
Inventor
By his Attorney H. MacKaye

THE NORRIS PETERS CO., WASHINGTON, D. C.

No. 852,699. PATENTED MAY 7, 1907.

S. W. BONSALL.

KNOCKDOWN WARDROBE.

APPLICATION FILED MAY 16, 1906.

3 SHEETS—SHEET 3.

Fig. 4

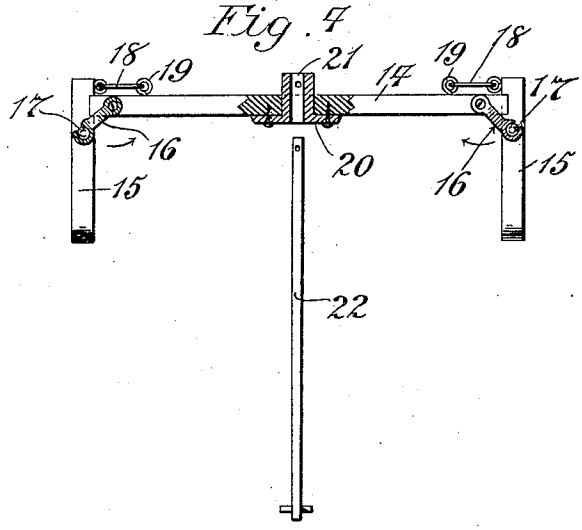

Fig. 5.

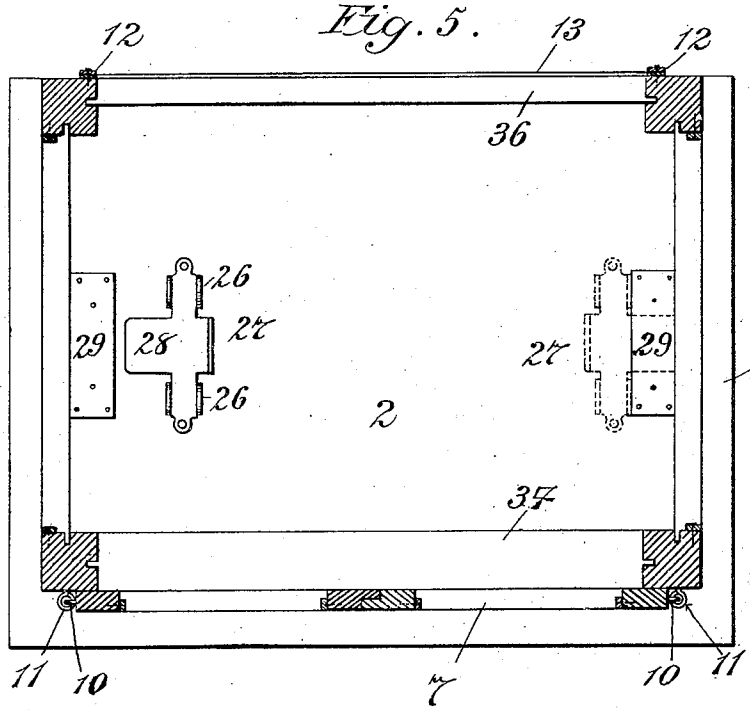

Fig. 6.

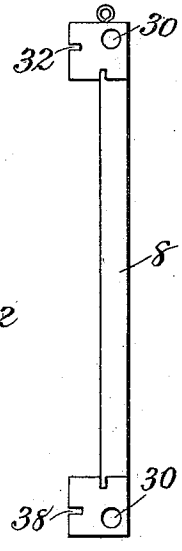

Witnesses
Edward C. Rowland.
Kathryn B. Cheevers.

Seymour W. Bonsall
Inventor

By his Attorney H. S. MacKay.

THE NORRIS PETERS CO., WASHINGTON, D. C.

UNITED STATES PATENT OFFICE.

SEYMOUR W. BONSALL, OF NEW YORK, N. Y.

KNOCKDOWN WARDROBE.

No. 852,699. Specification of Letters Patent. Patented May 7, 1907.

Application filed May 16, 1906. Serial No. 317,049.

To all whom it may concern:

Be it known that I, SEYMOUR W. BONSALL, a citizen of the United States, residing in the city of New York, county and State of New York, have invented a certain new and useful Improvement in Knockdown Wardrobes, of which the following is a specification.

The means afforded in most hotels, inns and lodgings for accommodation of suits and dresses is generally insufficient and travelers who carry an extensive wardrobe find themselves very often reduced to the necessity of keeping their clothing packed and taking out only such articles as are immediately needed. This is injurious to the clothing besides causing much annoyance and waste of time.

The present invention relates to an inexpensive, convenient and ornamental wardrobe which can be easily taken apart or put together by any unskilled person and wherein the most elegant and perishable garments can be safely hung away from dust and sunlight in such a manner as to be constantly and conveniently available.

My improved wardrobe can be packed flat and placed in a strong convenient box, so as to produce a light and easily handled package which can be cheaply transported as part of a traveler's baggage. The device can be made very pretty and ornamental, and is most desirable for visits to country houses or for furnishing summer cottages, yachts, camps and the like.

The invention is illustrated in its preferred form in the accompanying drawings, wherein Figure 1 is a perspective view of the various parts of my device without the doors, placed approximately in their assembled position, Fig. 2 is a perspective of the wardrobe as assembled, Fig. 3 is a sectional view of a detail, Fig. 4 is a plan view partly in section of the hanger rod and its support, Fig. 5 is a horizontal section on the plane x—x in Fig. 2 and Fig. 6 is a bottom view of one side wall of the wardrobe.

The main body of the wardrobe consists of a top 1, and a bottom 2, separated by vertical side walls 3 and 4, a back wall 5 and front doors 6 and 7.

The sides preferably consist of light rectangular frames 8 and 9 supporting properly stretched fillings of cloth which may be ornamented to suit the owner's taste. The doors are similarly constructed and are hung by hooks 10 which slip into staples or eyes 11 in the edges of the side walls. The rear piece is preferably composed of two light parallel strips of wood 12 to which are secured the edges of a rectangular cloth filling 13. This back is tacked to the side frames opposite the door or doors, as shown in Fig. 5.

The parts thus far named when assembled as hereinafter described, present the appearance shown in Fig. 2 and serve to shelter and conceal the clothing which is carried upon an appropriate universal suspending means whereby each garment is made separately accessible. This suspending means is preferably constructed as shown in Figs. 1, 3 and 4, so that it can be conveniently taken apart and packed flat. As shown this device comprises a top frame carried by two swinging sides capable of being securely though temporarily secured to the bottom of the wardrobe. The top frame comprises a rear section or board 14 setting into recesses in the inner faces of the side sections 15 and secured rigidly thereto by hooks 16 swinging horizontally to engage pins or catches 17 and by hooks 18 swinging vertically to engage appropriate catches or staples 19. A metallic base or socket 20 traverses the rear section 14 from front to back and is pierced in the same direction, as shown at 21, to receive one end of the hanger rod 22 which is preferably secured in place by a pin 23 as shown in Fig. 3. Upon the rod 22 there can be placed a number of removable hangers, as 24, any one of which can be removed, when the rod 22 is drawn out in front of the wardrobe, without disturbing the others.

Each of the swinging sides is composed of two parallel legs 25 pivoted as shown to a side piece of the top frame and at their opposite ends to the upturned lugs 26 of the metallic bottom braces 27. The bottom of each of these braces is composed of a flat horizontal plate 28 which projects outward to right and left respectively from the two sides of the suspending device. These serve at once to support the entire suspending device and to secure the same removably in place to the bottom piece 2.

Adjustment of the swinging suspending device is accomplished as follows: Two securing plates 29 are permanently fastened flat upon the bottom piece, so as to leave a thin space beneath each just large enough to permit the projections 28 to be forced under said plates as shown in dotted lines in Fig. 5. The joints at the tops of the legs 25 are sufficiently loose to permit each pair to swing in-

ward far enough to allow this adjustment to be made when the wardrobe is being assembled.

The outer portions of the ward-robe are put together as follows: The side frames 8 and 9 are permanently constructed, as they are conveniently packed flat in a box of substantially the length and breadth as said frames. As shown in Fig. 6 the bottom of each side frame is provided with holes 30 which fit tightly over dowel pins 31 projecting upward from the floor piece. Mortises 32 are provided for receiving the tenons 33 on the bottom sill 34. The dowel pins 35, on the floor piece 2, serve to further secure the sill in place. At the bottom and back a rear brace 36 is provided whose tenons 37 are preferably even with the front face and fit the mortises 38 in the bottoms of the side frames. The dowel pins 39 serve to further secure the bottom rear brace 36 in place. The side frames are secured together at the top by the roof piece 1 and the sill 40 and top rear brace 41. The roof piece 1 is provided with dowel pins 42, fitting the holes 43 in the tops of the side frames and with guide pieces 44 which fit snugly against the inner faces of the frames when the rool piece is in place. The sill 40 is secured to the sides by the mortises 45 and the upper rear brace 41 is similarly secured by the mortises 46.

Two half dowels 47 are tacked to the inner face of the side frames against which slide the outer faces of the sides 15 of the suspending device, thus preventing twisting and catching of this device as it is pushed in and out. Two chains 48 are attached to the back of the rear section 14 of the suspending device, and these, being attached to the upper rear brace 41, by the staples 49 or otherwise, serve to support the suspending device and the garments which it carries when they are drawn forward.

The construction above described provides a form of convenient ward-robe of the utmost lightness which can be packed or put together by any unskilled person without the use of a single tool.

Various changes can be made in this device by those skilled in the art without departing from my invention and I do not limit myself to the details herein described.

What I claim is—

1. A knock down wardrobe comprising a flat roof, a flat floor, side frames carrying a cloth filling, a bottom sill and rear brace both secured by tenons to the side frames, a top sill and a top rear brace both secured by tenons to the side frames and a back piece comprising side strips secured to a cloth filling and to said side frames, substantially as described.

2. A knock down wardrobe comprising two side frames, a top having dowel pins entering said frames, a floor having dowel pins also entering said frames, a bottom sill and rear brace doweled to said floor and mortised to the side frames, a top sill and rear brace mortised into said side frames and a forward swinging suspending device removably secured to said floor, substantially as described.

3. In a knock down wardrobe a floor having securing plates secured flat upon said floor so as to leave a narrow space beneath them, in combination with a suspending device having bottom braces provided with flat projecting bottom plates extending under said securing plates and readily removable therefrom, substantially as described.

4. In a wardrobe a floor having two securing plates secured thereto; in combination with a suspension device comprising an upper frame, pairs of swinging legs pivoted thereto and a bottom brace for each pair of legs, each brace comprising a pair of lugs pivoted to said legs and a flat bottom plate having an extension fitting under said securing plates and readily removable therefrom substantially as described.

5. In a wardrobe, a suspension device comprising two side pieces, a back piece between the same, swinging hooks and catches working horizontally and swinging hooks and catches working vertically for connecting said side pieces to the ends of said back piece and means for movably supporting said suspension device in the wardrobe substantially as described.

6. A knock down wardrobe comprising an inclosure composed of light flat parts connected by simple interlocking parts and an interior swinging suspending device composed of flat parts interlocking and connected by catches, whereby the entire structure may be separated for packing in flat form with a minimum of weight, substantially as described.

SEYMOUR W. BONSALL.

Witnesses:

HAROLD S. MACKAYE,

KATHRYN B. CHEEVERS.