Feb. 22, 1949. W. PINDER 2,462,420

PRACTICE DEVICE FOR GOLF PUTTING

Filed April 9, 1946

FIG. 1

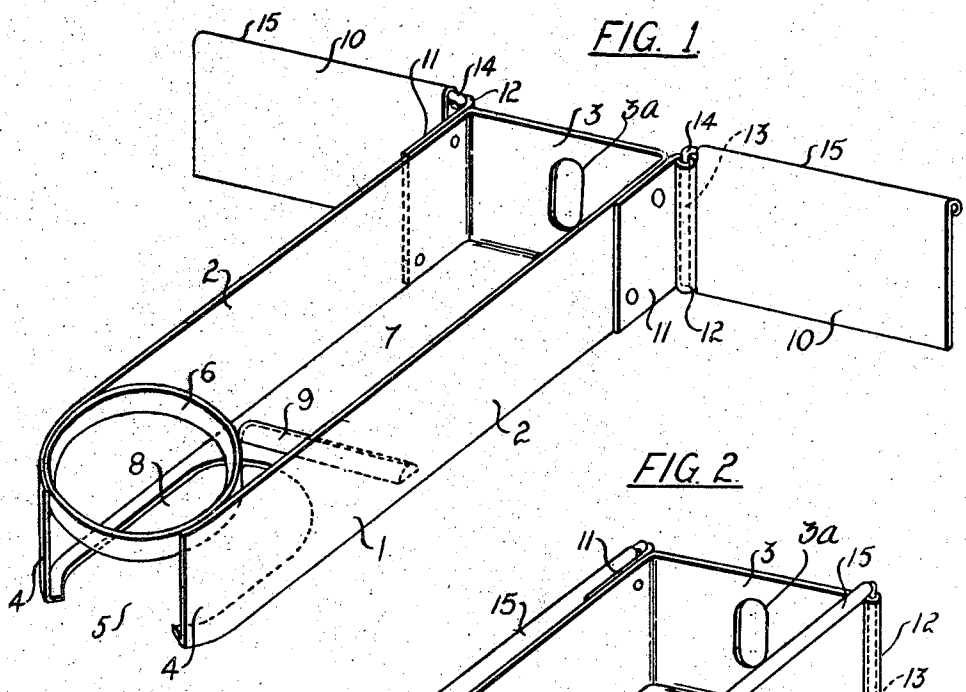

FIG. 2

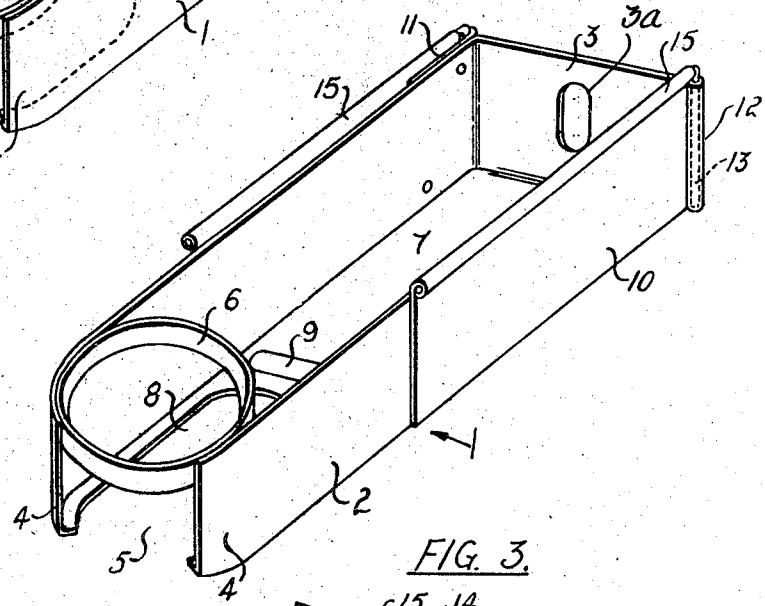

FIG. 3.

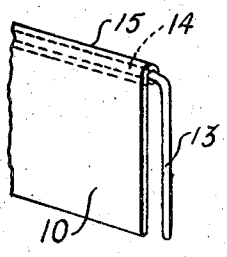

INVENTOR:-
WILLIAM PINDER
per, Raymond
Attorney.

Patented Feb. 22, 1949 2,462,420

UNITED STATES PATENT OFFICE

2,462,420

PRACTICE DEVICE FOR GOLF PUTTING

William Pinder, Peterborough, England

Application April 9, 1946, Serial No. 660,759
In Great Britain April 28, 1945

3 Claims. (Cl. 273—35)

1

This invention relates to a device by which golfers may practice putting at home either in the garden or indoors on a carpet. The object of the invention is to provide a simple device which may be laid down on a lawn or carpet so that golfers or others may practice putting at home in relative ease and comfort and which enables a dozen or more balls to be used in succession without interfering with individual shots.

According to this invention the practice device comprises a box-like receptacle preferably of rectangular form having an opening through which the balls may pass and a ring representing the "hole" in the "green" supported above the opening near one end of the receptacle. The floor of the receptacle is provided with a substantial ridge behind the ring to retain in the rear part of the receptacle any balls which pass through the opening beneath the ring and which may be considered as having been "holed."

According to one embodiment of the invention the device may be provided at its rear end and at either side thereof with a hinged flap, the two flaps thus provided extending at right angles to the device when in operative positions and acting to stop any balls which miss the opening at the front of the device rolling to distant and inaccessible places. By making the flaps hinged they may be folded compactly against the side of the receptacle when the device is not in use so as to occupy the minimum of space and the flaps may also be made detachable so that they may be easily removed, should they not be required.

In order that the invention may be clearly understood and readily carried into effect, reference will now be made to the accompanying sheet of drawings which illustrates one embodiment of the invention by way of example. In the drawings,

Fig. 1 is a perspective view with extension flaps for preventing balls rolling beyond the device, in their operative position.

Fig. 2 is a similar view but with said flaps in a closed position, and

Fig. 3 is a fragmentary view showing how the flaps may be detachably connected to the device.

Referring to the drawings the device comprises an elongated rectangular receptacle 1 of about fifteen inches long, four and a half inches wide and having upstanding walls 2 along two sides and one end wall 3 about two and one half inches high. At the other end the sides are radiused or directed inwardly as at 4 to a front opening 5 of about three inches wide or slightly more. Over the front of the device is a ring 6 representing the "hole" and this is preferably painted white so as

2

to be readily seen by the user. The upstanding sides of the receptacle are curved inwardly at their forward ends 4 to correspond with the shape of the ring which is supported thereby. The floor 7 of the receptacle is cut away at 8 beneath the ring 6 so that no obstruction is offered to the free entry of the balls through the opening 5. Just behind the ring 6, the floor 7 is formed with an upwardly projecting ridge 9 over which each ball, after entering the receptacle 1, will pass into the rear part thereof and this ridge 9 will prevent the balls from again rolling or rebounding back so as to obstruct the opening. The floor 7 and inner walls of the receptacle may be lined with felt or other soft padding material to further reduce the possibility of the balls bouncing back toward the opening. In the rear wall 3 may be provided a hole 3a into which the user may hook his putter in order to tip up the device and thus empty out any balls collected therein.

To prevent balls which miss the front opening 5 rolling beyond the device the receptacle 1 is provided at its rear end and at each side thereof with a hinged flap 10. In an operative position the two flaps 10 extend outwardly at right angles to the receptacle so as to stop any balls which miss the opening 5 and roll along the side of the container. A convenient method of securing each flap to the receptacle comprises a hinge plate 11 riveted or otherwise secured to each side wall 2 of the receptacle and which is formed at its rear edge with a bent over portion 12 which constitutes a socket for receiving a hook-like member 13 provided at the inner end of each flap 10. This member 13 may comprise the vertical limb of an L-shaped rod or wire having its horizontal limb 14 engaged in a beaded over part 15 of the flap 10.

The device may be used on any carpet or lawn without any marking, cutting or damage thereto and enables golfers or others to practice putting in an easy but effective manner. A considerable number of balls may be used in succession and those which do not enter the opening 5 at the front of the receptacle will be deflected aside by the radiused sides and stopped by the side wings 10. When a number of balls have collected in the receptacle, they may be readily tipped out thus avoiding frequent bending down by the golfer.

I claim:

1. A device for practicing golf putting, comprising a box-like receptacle having a floor, upstanding rear and side walls and an open top, an opening at the front end, a ring representing the "hole" in the "green" supported by the side walls and positioned adjacent the front opening,

said floor being cut away throughout the area beneath said ring.

2. A device for practicing golf putting, as recited in claim 1, in which the floor is provided with a rounded low ridge positioned just behind said ring, to prevent rebounding balls from rolling back into the area beneath said ring.

3. A device for practicing golf putting, as recited in claim 1, in which the rear wall is provided with a hole of such size as to accommodate a golf putting head whereby the rear end of said receptacle can be lifted to cause balls contained therein to roll over said floor and out said opening at the front end.

WILLIAM PINDER.

REFERENCES CITED

The following references are of record in the file of this patent:

UNITED STATES PATENTS

Number	Name	Date
954,299	Johnson	Apr. 5, 1910
1,417,458	Cory	May 23, 1922
2,383,866	Kling	Aug. 28, 1945