June 19, 1951 D. C. LYNN 2,557,880

PUMP AND RESERVOIR UNIT OF HYDRAULIC JACKS

Filed Jan. 18, 1946

Fig. 1

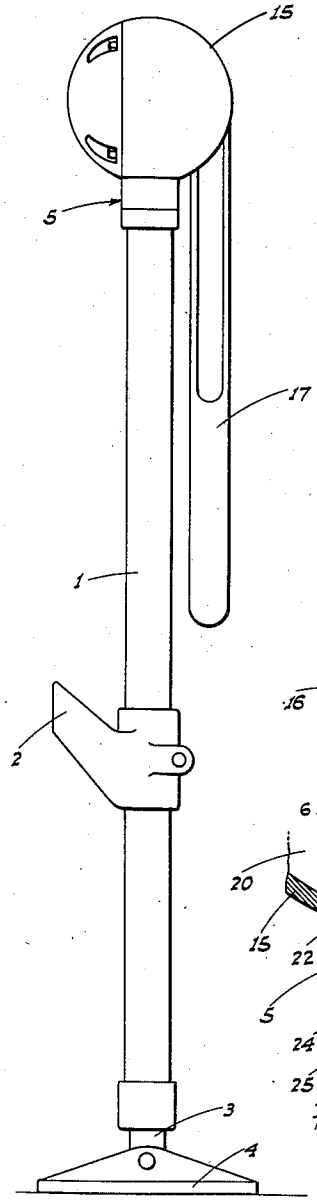

Fig. 2

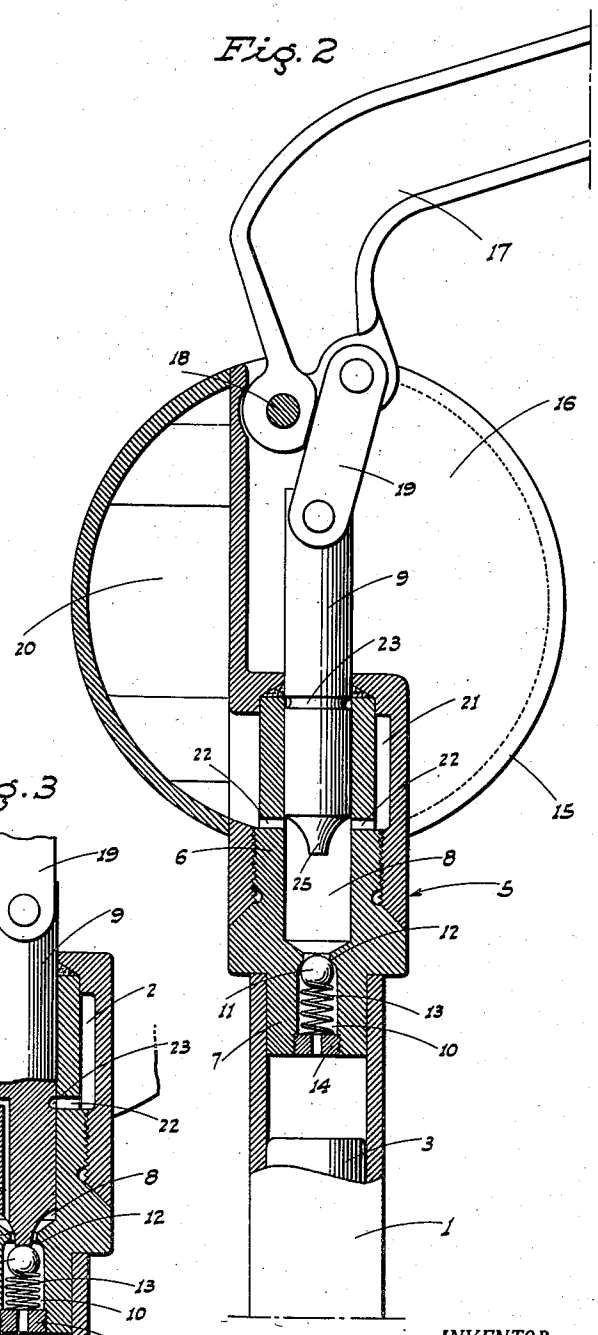

Fig. 3

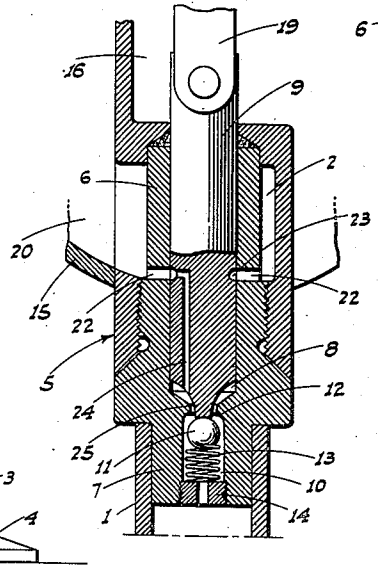

INVENTOR.
Donald C. Lynn
BY
Corbin & Corbin
ATTYS.

Patented June 19, 1951

2,557,880

UNITED STATES PATENT OFFICE

2,557,880

PUMP AND RESERVOIR UNIT OF HYDRAULIC JACKS

Donald C. Lynn, Lodi, Calif.

Application January 18, 1946, Serial No. 641,978

1 Claim. (Cl. 222—385)

1

This invention relates in general to, and it is an object to provide, an improved manually actuated, hydraulic jack; such jack being especially designed for use in connection with automobiles. The jack is of the type which is adapted to engage with the bumper of an automobile to lift the latter sufficiently to permit tire changes.

Another object of the invention is to provide a hydraulic jack which includes a novel pump, and releasing means therefor, designed to facilitate use of the jack.

A further object of the invention is to provide a hydraulic jack which includes a vertically swingable pump handle operative through a predetermined normal stroke to raise the jack, but also operative upon movement beyond one end of said normal stroke, to release the jack.

A further object of the invention is to provide a practical hydraulic jack, and yet one which will be exceedingly effective for the purpose for which it is designed.

These objects are accomplished by means of such structure and relative arrangement of parts as will fully appear by a perusal of the following specification and claim.

In the drawing:

Figure 1 is a side elevation of the jack.

Figure 2 is an enlarged fragmentary sectional elevation of the pump, showing the plunger retracted.

Figure 3 is a similar view, but shows the plunger advanced to jack-release position.

Referring now more particularly to the characters of reference on the drawing, the hydraulic jack comprises a vertically elongated sleeve cylinder 1 provided with a vertically adjustable bumper hook 2. An elongated piston 3 slidably engages in the sleeve cylinder 1 from below, and at its lower end said piston is fitted with a pivotally mounted ground engaging foot 4.

At its upper end the sleeve cylinder 1 supports a pump unit, indicated generally at 5, and which comprises an upstanding pump body 6 including a neck 7 projecting into and secured in connection with the upper end of the sleeve cylinder 1.

The pump 6 is formed with an axial cylinder 8 initially open at its upper end, and having a pump plunger 9 engaging therein in reciprocating relation.

The lower end of the cylinder 8 communicates with the upper end portion of the sleeve cylinder 1 through an axial bore 10 of reduced diameter. An upwardly closing ball check valve 11

2

is disposed in bore 10 and is urged against a seat 12 by means of a compression spring 13 engaged between said ball and a ported shoulder forming nut 14 threaded into the lower end of the bore 10.

The pump unit 5 is fitted, at its upper end, with a rigid, spherical head 15 of hollow construction and slotted circumferentially from top to bottom on one side, as at 16.

A pump handle 17, L-shaped at its inner end, projects into the spherical head 15 through the slot 16, and is pivoted in said head, adjacent the top thereof, on a cross pivot 18. A link 19 pivotally connects between the pump handle in eccentric relation to the pivot 18, and the upper end of the pump plunger 9, whereby up and down swinging movement of said pump handle through a normal predetermined stroke results in reciprocation of the pump plunger 9. When the jack is not in use the pump handle 17 depends through the bottom portion of the slot 16 alongside the sleeve cylinder 1, as clearly shown in Fig. 1.

The spherical head 15 is partitioned on the side thereof opposite the slot 16 to form an oil reservoir 20, which communicates at the bottom with an annular passage 21 formed in the pump body 6 in surrounding relation to approximately the upper half of the pump cylinder 8; there being opposed ports 22 which communicate between the annular passage 21 at the bottom and said pump cylinder 8.

An annular groove 23 is formed in the pump plunger 9 a distance above its lower end substantially equal to one-half the length of the pump cylinder 8, and a bleed passage 24 is formed lengthwise in the pump plunger 9 from its lower end upwardly into communication with the annular groove 23. At its lower end the pump plunger 9 is formed with a downwardly projecting frusto-conical tip 25.

When the above described hydraulic jack is in use it is disposed adjacent the automobile bumper, and the bumper hook 2 is first adjusted upwardly into engagement with said bumper.

Thereafter the pump handle 17 is reciprocated through a normal predetermined stroke which similarly reciprocates the pump plunger 9, causing liquid from the reservoir 20 to be pumped through the pump unit 5, downwardly past the ball check valve 11 into the upper end portion of the sleeve cylinder 1. The fluid pressure in said sleeve cylinder causes the same to rise on the piston 3, thus jacking up the automobile for tire changes or the like.

When the pump is in normal use to raise the jack, the annular groove 23 does not fall into

register with the ports 22. However, to release the pressure in the jack to effect lowering of the latter, the pump handle 17 is swung downwardly until it is in substantially its lowermost position, as shown in Fig. 1, and which is far below its normal pumping position. In this lowered position of the handle the pump plunger 9 is in its lowermost position, as shown in Fig. 3, wherein the tip 25 engages and opens the ball check valve 11. At the same time the annular groove 23 falls into register with the ports 22. As a consequence fluid pressure from the sleeve cylinder 1 bleeds upward through the bore 10, thence through the bleed passage 24 to the annular groove 23, and from the latter through ports 22 into annular passage 21 and back into the reservoir 20. In this manner the jack is effectively and readily released so that the parts thereof return to starting position.

The hydraulic jack, while being of rugged and practical construction, is of simple design and embodies a minimum of parts, as is desirable.

From the foregoing description it will be readily seen that there has been produced such a device as substantially fulfills the objects of the invention as set forth herein.

While this specification sets forth in detail the present and preferred construction of the device, still in practice such deviations therefrom may be resorted to as do not form a departure from the spirit of the invention, as defined by the appended claim.

Having thus described the invention, the following is claimed as new and useful and upon which Letters Patent are desired:

A hydraulic pump and reservoir unit including an upstanding pump body having a vertical pump chamber therein open to its upper end and a reduced-diameter axial bore extending to the lower end of the body from the lower end of the chamber, a check valve in the bore opening away from the chamber, a rigid hollow head fixed to and upstanding from the body and forming an oil reservoir, the head being formed with a vertical slot open to one side and extending from top to bottom thereof, the upper end of the pump chamber opening into the slot and the bottom of the slot above the chamber being back of the axis thereof, a pump plunger slidable in the chamber and projecting therefrom into the slot, there being port means operative to alternately open and close communication between the reservoir and pump chamber below the plunger upon reciprocation of the latter, an L-shaped handle lever pivoted on the head within the slot above the chamber in a horizontal plane between the bottom of the slot and the axis of the pump chamber, and a depending link connecting the handle and the plunger in position to lower the plunger upon downward movement of the handle; the bend of the handle being so disposed that when the plunger is in its lowermost position, the handle will depend from within the slot so as to lie adjacent the pump body substantially parallel to the axis of the pump chamber.

DONALD C. LYNN.

REFERENCES CITED

The following references are of record in the file of this patent:

UNITED STATES PATENTS

Number	Name	Date
141,232	Ojeda	July 29, 1873
205,674	Pennypacker	July 2, 1878
1,189,815	Hennessy	July 4, 1916
1,277,450	Malone	Sept. 3, 1918
2,044,044	Anthony	June 16, 1936
2,254,084	Nilson	Aug. 26, 1941
2,261,438	Harwood	Nov. 4, 1941
2,283,593	Akins	May 19, 1942

FOREIGN PATENTS

Number	Country	Date
492,716	Great Britain	Sept. 23, 1938
139,942	Great Britain	Mar. 18, 1920