(No Model.) 2 Sheets—Sheet 1.

J. KILBURN.

SPINDLE SUPPORT.

No. 590,321. Patented Sept. 21, 1897.

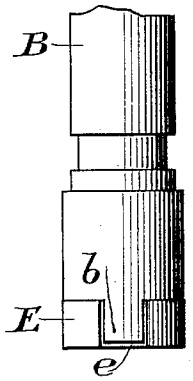

FIG. 2.

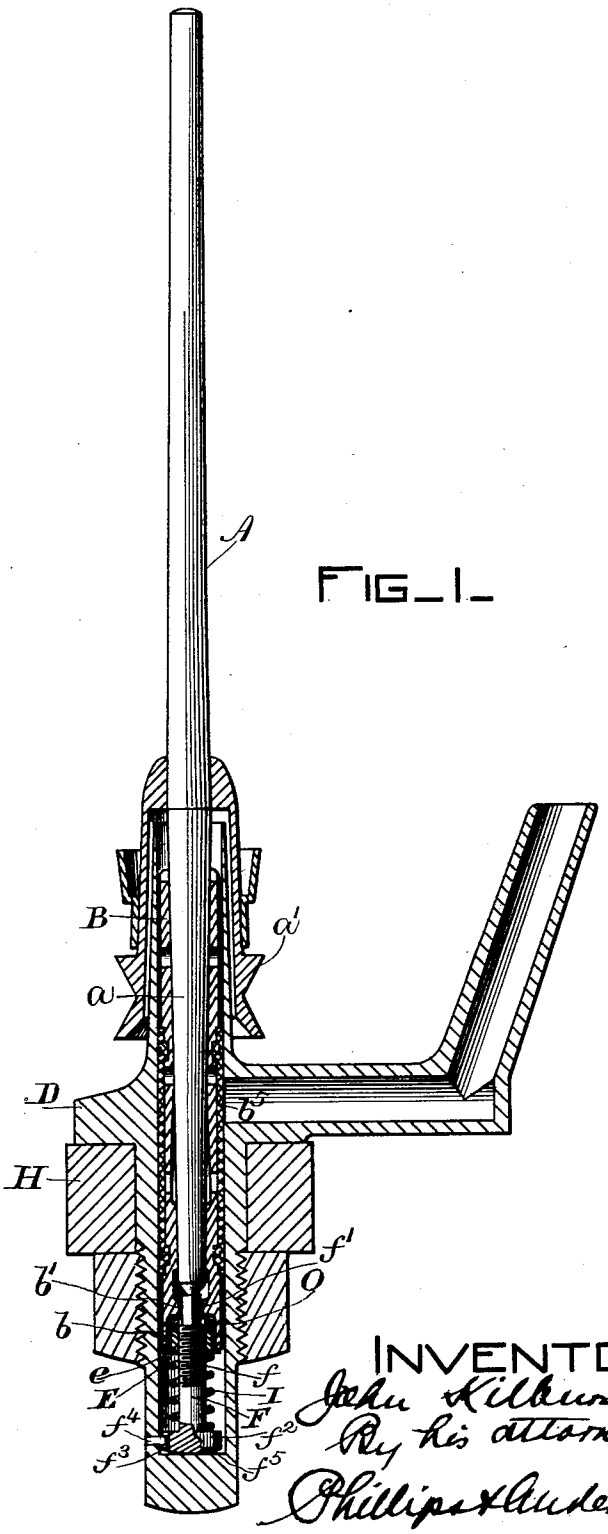

FIG. 1.

WITNESSES

C. E. Hoyt.

John J. Collins.

INVENTOR

John Kilburn.

By his attorneys,

Phillips & Anderson.

THE NORRIS PETERS CO., PHOTO-LITHO., WASHINGTON, D. C.

(No Model.) 2 Sheets—Sheet 2.

J. KILBURN.

SPINDLE SUPPORT.

No. 590,321. Patented Sept. 21, 1897.

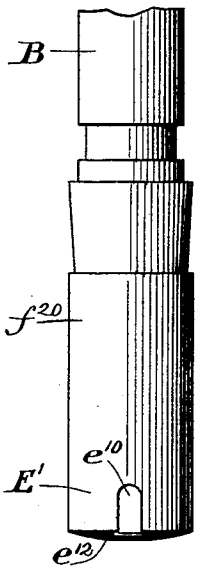

FIG. 4.

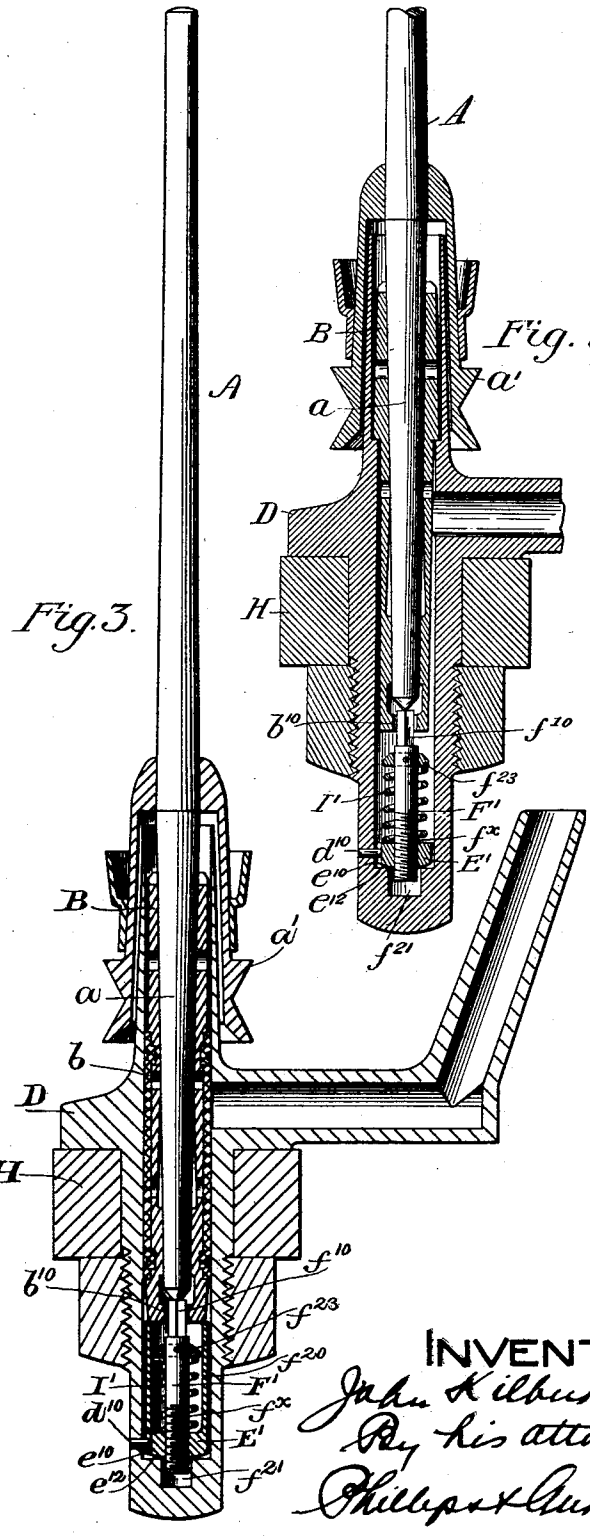

Fig. 3.

Fig. 5.

WITNESSES

C. E. Whyte.

John J. Collins.

INVENTOR

John Kilburn.

By his attorneys,

Phillips & Anderson

THE NORRIS PETERS CO., PHOTO-LITHO., WASHINGTON, D. C.

UNITED STATES PATENT OFFICE.

JOHN KILBURN, OF BELMONT, MASSACHUSETTS.

SPINDLE-SUPPORT.

SPECIFICATION forming part of Letters Patent No. 590,321, dated September 21, 1897.

Application filed December 2, 1896. Serial No. 614,257. (No model.)

To all whom it may concern:

Be it known that I, JOHN KILBURN, a citizen of the United States, residing at Belmont, in the county of Middlesex and State of Massachusetts, have invented certain new and useful Improvements in Spindle-Supports; and I do hereby declare the following to be a full, clear, and exact description of the invention, such as will enable others skilled in the art to which it appertains to make and use the same.

The present invention relates generally to spindles of the self-centering or top type, and more particularly to such classes of spindles of the above-designated type as are provided with a tapered pintle which is fitted to correspondingly-tapered bearings in a tubular support or bolster.

The object of the present invention is to provide means for adjusting the relative longitudinal or vertical position of the bolster and step to prevent any substantial increase in the amount of friction developed by the rotation of the spindle in the bolster as the pintle wears away or wears into the step, and means whereby the bolster and step, when adjusted as above stated, are retained in their adjusted position until sufficient friction is developed to effect a readjustment of the parts, as hereinafter described.

In another application filed herewith, Serial No. 614,251, I have shown and broadly claimed means for automatically securing the result above indicated, and the present application is filed to secure further protection upon the means herein shown and described, or their equivalents, whether embodied in an automatic or hand-controlled device.

For the object above stated and for the further object of generally improving the form and arrangement of devices embodied in a spindle-support the present invention consists of means for adjusting the relative longitudinal or vertical position of the bolster and step, comprising a rotating member and a member held from rotation, a threaded connection between said members, whereby a rotation of one member causes a relative vertical movement of the members, and a spring arranged to act upon said members to determine the effort required to effect a relative rotation thereof and to restrain them in any required position until such effort is applied.

The present invention further consists of the devices and combinations of devices hereinafter set forth and claimed.

Preferred forms of the present invention are illustrated in the accompanying drawings, in which—

Figure 1 is a section through a spindle-support embodying the present invention, showing the spindle and other parts in elevation. Fig. 2 is a side elevation of the lower portion of the bolster, showing its connection with one member of the adjusting mechanism. Fig. 3 is a vertical section through a spindle-support, showing a modified form of my invention, the spindle and other parts being shown in elevation; and Fig. 4 is an elevation of the lower end of the bolster and its support as shown in Fig. 3. Fig. 5 represents a modification.

Similar letters of reference indicate similar parts in the several views.

In the drawings, A represents the spindle, which is provided with the usual tapered pintle a and conveniently carries the sleeve-whirl a'. B represents the bolster interiorly tapered to fit the spindle-pintle a and which may be provided with the usual wicking or other elastic packing b^5. D represents the bolster-case, and H the spindle-rail, all of which parts, except as hereinafter specified, may be and conveniently are of any usual or preferred construction and may be varied in form and arrangement without departure from the present invention.

In the form of my invention illustrated in Fig. 1 of the drawings, E represents the rotating member of my adjusting mechanism, and F the member which is held from rotation. As shown, the member E consists of an interiorly-threaded washer or sleeve engaging the thread portion f of the member F. The washer or sleeve E is provided with peripheral notches e, which are loosely engaged by the downwardly-projecting lugs or teeth b, the arrangement being such that a rotation of the bolster rotates the washer or sleeve E, for the purposes hereinafter described.

As shown in the drawings, the member F of my improved adjusting mechanism con-

sists of a pintle having the threaded portion f, as before described, and the upper portion f' of which is projected through an aperture b' in the base of the bolster B and forms the step for the spindle-pintle a. The upper portion f' of pintle F is preferably circular in section, so as to allow the bolster B to turn freely thereon.

To restrain the pintle F from rotation, it is provided with a head f^2, provided at its periphery with a vertical slot f^3, engaged by a pin f^4, driven in the wall of the bolster-case D; but any suitable device for securing such result is clearly within the scope of the present invention.

The threads upon the pintle F loosely engage the threads in the washer or sleeve E, and the spring I is provided, which exerts a vertical pressure upon the washer or sleeve E, which tends to cause the threads on the pintle F to bind in the threads in the washer or sleeve E and said sleeve to turn with increased friction upon said pintle.

It is evident from the foregoing that since the effort required to rotate the sleeve E depends upon the upward effort exerted by the spring I by providing a spring I of the required tension the effort required to rotate the sleeve E may be substantially fixed, as desired, for the purposes hereinafter stated.

As shown in the drawings, the bolster B rests upon a rocker-washer O, which surrounds the pintle F, being fitted loosely thereon, and rests upon the sleeve E, which is supported by said pintle.

To further secure the free movement of the bolster B to center itself under an unbalanced load, the lugs or teeth b are made to loosely engage the notches e, as before stated, and the upper portion f' of the pintle F is loosely fitted to the aperture b' in the bolster B. I also find it convenient in practice to slightly round the lower face f^5 of the head f^2 of pintle F.

The operation of the form of my invention shown in Fig. 1 is as follows: When the pintle a has worn away or worn into the step f' sufficiently to cause the spindle A to drop in its bearing, the pintle a will have a tendency to bind and to rotate with increased friction. The friction developed between the spindle A and bolster B exerts an effort to rotate the bolster B in the direction of rotation of the spindle A, and when said effort, increased by the increase of friction, as above stated, is sufficient to overcome the friction of the threads upon pintle F in the threads in sleeve E, as determined by the upward effort of spring I, it will rotate the sleeve E upon the pintle F and depress the same, causing the bolster B to fall and the friction to be diminished, and the parts will be retained in their adjusted position until the friction has again sufficiently increased to cause a repetition of the operation above described.

In the form of my invention shown in Fig. 3 the upper portion f^{10} of the pintle F' is polygonal in section or some other convenient shape other than circular and is projected into and engaged by a correspondingly-shaped recess b^{10} in the base of the bolster B. As in the first-described form, the upper portion f^{10} of pintle F' forms the step for the spindle A. The lower portion $f^{\times}$ of the pintle F' is threaded and engages an internally-threaded washer or collar E', which preferably rests upon the bottom of the bolster-case D and supports the pintle F'. The above-described arrangement is such that a rotation of the pintle F' causes said pintle to rise or fall in the washer or collar E', and in practice I provide a recess f^{21} in the bottom of the bolster-case D, which receives the lower end of the pintle F' and allows it to be depressed below the bottom of the washer E'.

As shown in the drawings, the washer or collar E' carries a sleeve or tubular support f^{20}, upon which rests the bottom of bolster B. When, however, the present invention is applied to that class of spindle-bearings in which the bolster is supported at the top or above its base the tubular support f^{20} may be dispensed with.

The washer or collar E' may be conveniently held from rotation by means of a pin d^{10}, driven through the bolster-case D and engaging the vertical slot e^{10} in the periphery of the washer or collar E', or by other suitable means.

Within the tubular support f^{20} the pintle F carries a washer f^{23}, held from motion along the same and against which bears one end of a compression-spring I', which is coiled about the pintle F', and the other end of which bears against the top of the washer or collar E'.

The threaded connection between the pintle F' and the washer or collar E' is a loose connection, and the effort of the spring I' tends to raise the pintle F' and to cause the threads thereon to engage the threads in the washer E' with an increased friction.

To allow the spindle A to readily center itself under an unbalanced load, the sleeve or tubular support f^{20} is made slightly smaller in section than the bore of the bolster-case D, the washer E' is preferably made with a slightly-rounded base e^{12}, and the step f^{10} loosely engages the recess b^{10} in the base of the bolster D.

In the operation of my invention as last described a rotation of the bolster B raises or lowers the step f^{10} therein. In other respects the operation is substantially similar to that heretofore described, the modified form of my invention last herein described embodying, broadly speaking, a mere reversal of parts shown and described in the first form.

It should be understood that my present invention is applicable to spindle-bearings in which the bolster is supported at the top or

base or at an intermediate point, and in which the bolster is provided with the usual wicking or surrounded by a layer or film of oil.

I therefore claim as novel and desire to secure by Letters Patent of the United States—

1. The combination, in a spindle-support, comprising a bolster and step capable of a relative vertical movement, of a device for adjusting the relative vertical position of the step and bolster consisting of a rotating member, a member held from rotation, a threaded connection between said members, and a spring arranged to determine the effort required to rotate the rotating member and to hold the members in any adjusted position until such effort is applied, substantially as described.

2. The combination, in a spindle-support, comprising a bolster and step capable of a relative vertical movement, of a device for adjusting the relative vertical position of the step and bolster, consisting of a threaded pintle carrying the step, a threaded sleeve engaging the threaded portion of the pintle, a loose connection between said sleeve and bolster, a spring arranged to bear upon said sleeve and pintle, and means to restrain said pintle from rotation, substantially as described.

3. In a spindle-support the combination with a bolster-case and a bolster having an aperture in its base, of a step carried by a vertical pintle projected into the aperture in the bolster, and a curved base for said pintle resting upon a fixed support, substantially as described.

In testimony whereof I affix my signature in presence of two witnesses.

JOHN KILBURN.

Witnesses:
A. E. WHYTE,
A. O. ORNE.