Sept. 19, 1944. H. A. SOUTHERLAND 2,358,603

AVIATOR'S SEAT

Filed April 13, 1942 3 Sheets-Sheet 1

Fig. 1.

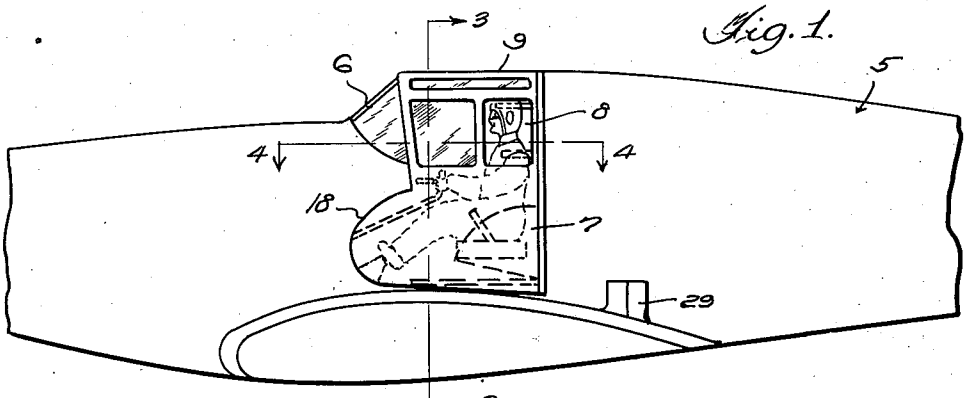

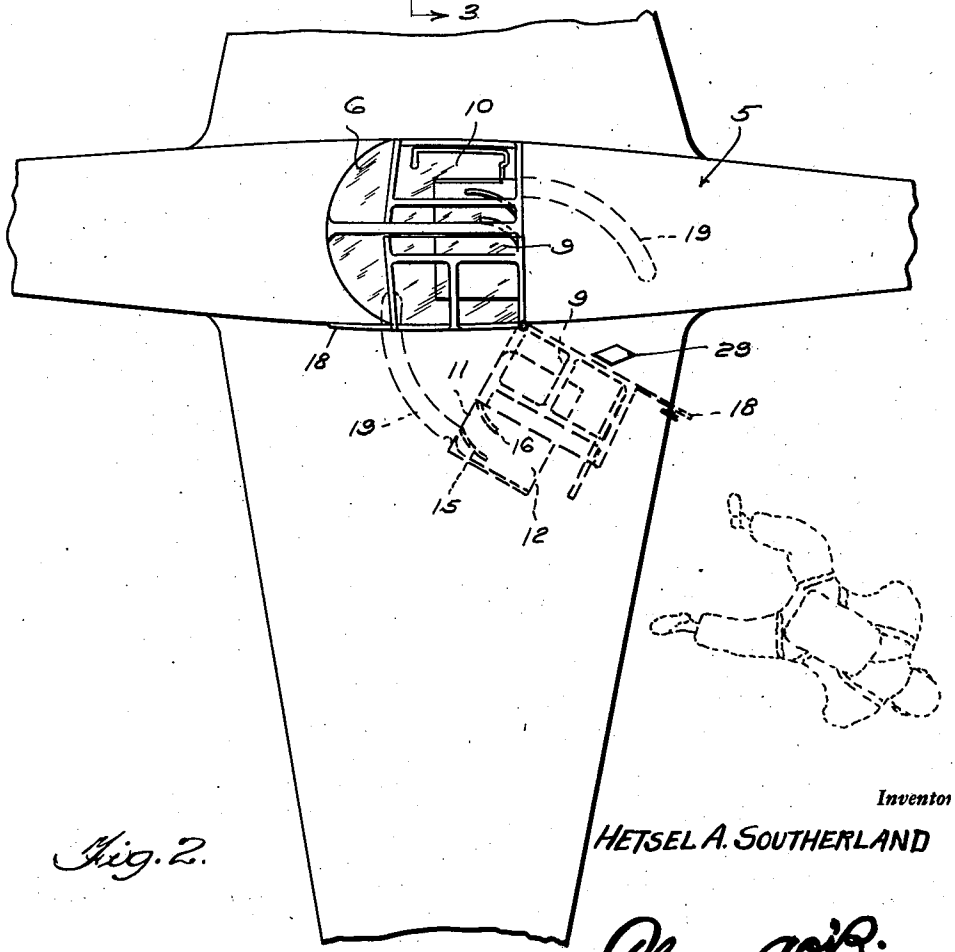

Fig. 2.

Inventor

HETSEL A. SOUTHERLAND

By Clarence A. O'Brien and Harvey B. Jacobson Attorneys

Sept. 19, 1944. H. A. SOUTHERLAND 2,358,603

AVIATOR'S SEAT

Filed April 13, 1942 3 Sheets-Sheet 2

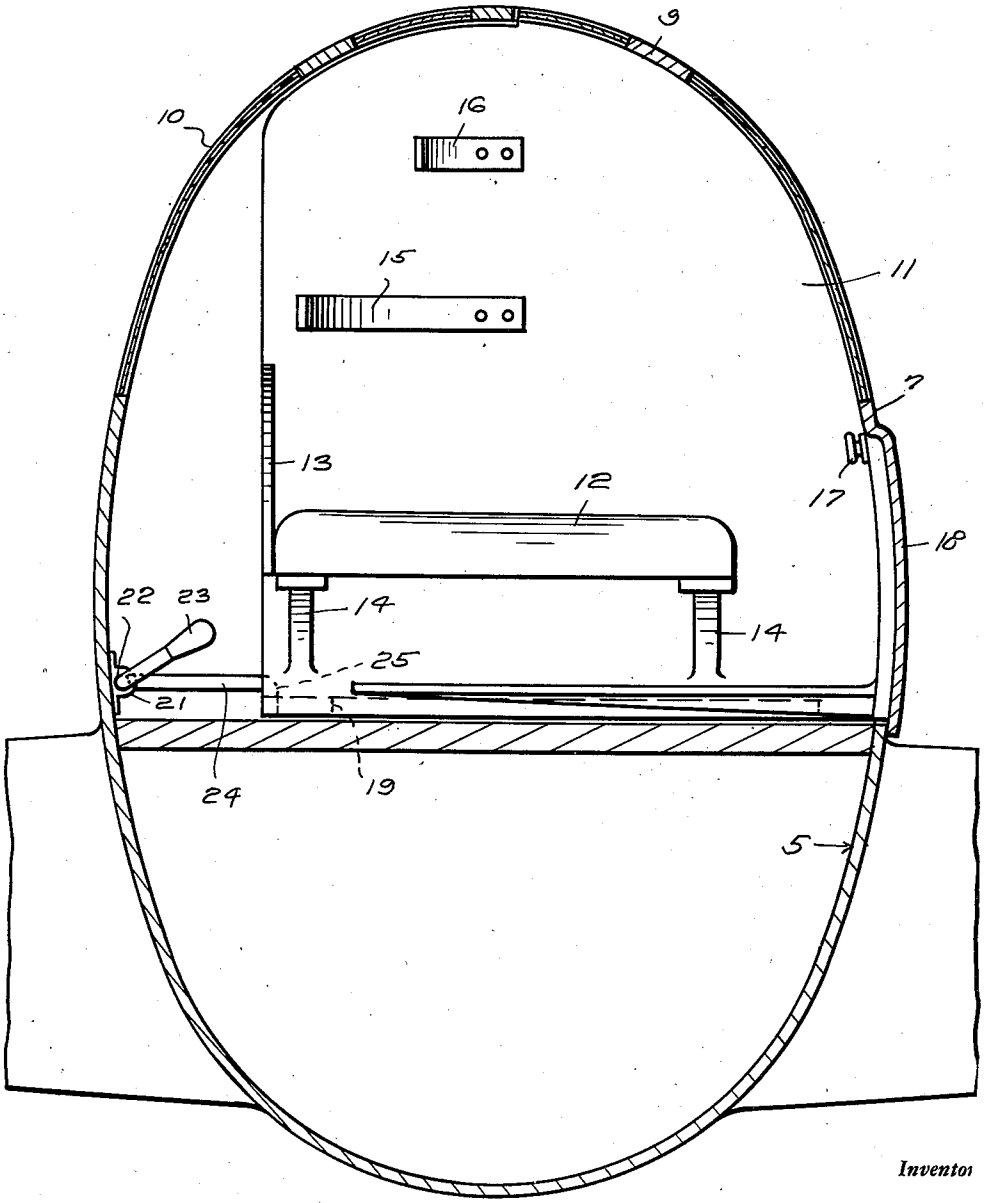

Fig. 3.

Inventor

HETSEL A. SOUTHERLAND

By Clarence A. O'Brien and Harvey B. Jacobson Attorneys

Sept. 19, 1944. H. A. SOUTHERLAND 2,358,603

AVIATOR'S SEAT

Filed April 13, 1942 3 Sheets-Sheet 3

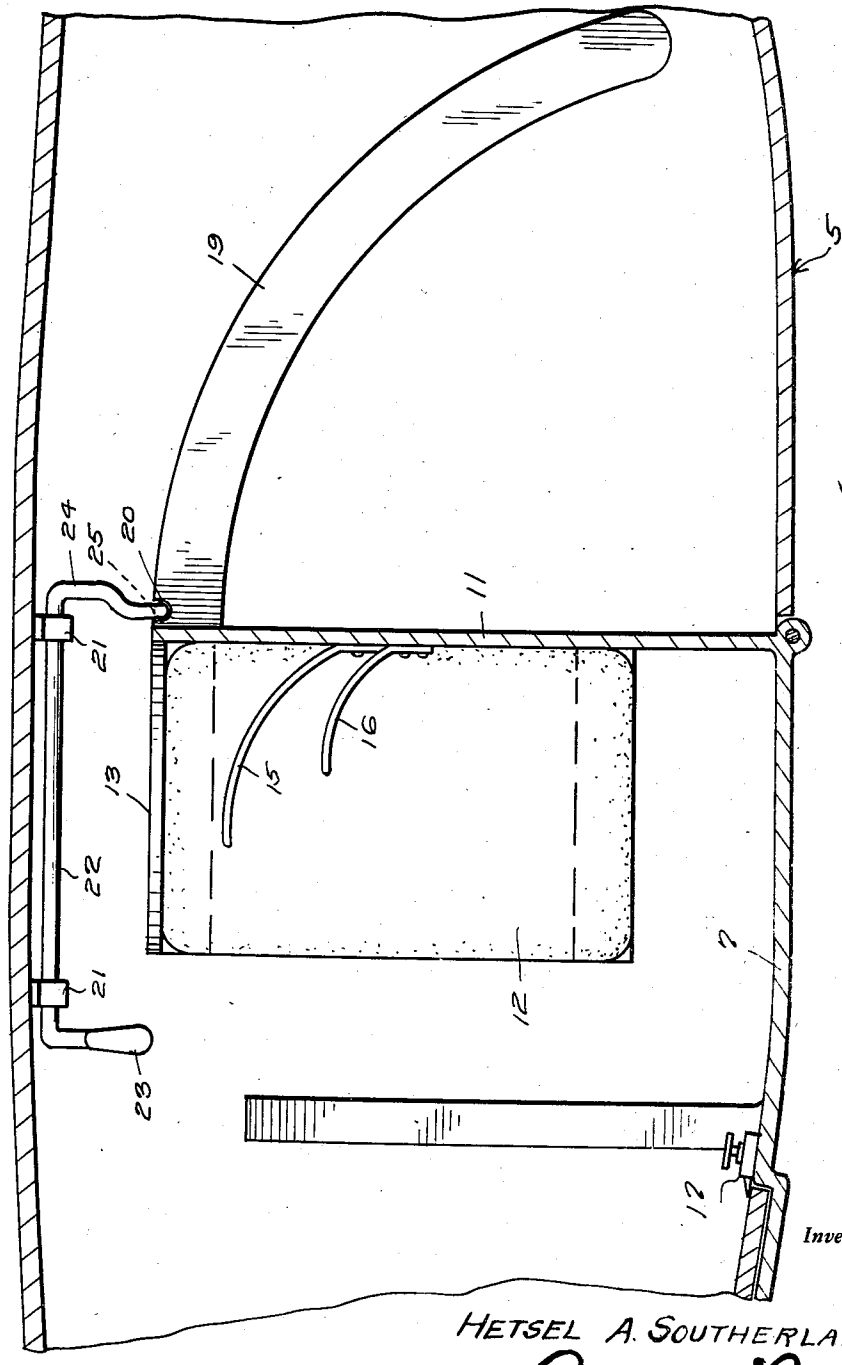

Fig. 4.

Inventor

HETSEL A. SOUTHERLAND

By Clarence A. O'Brien

and Harvey B. Jackson Attorneys

Patented Sept. 19, 1944

2,358,603

UNITED STATES PATENT OFFICE

2,358,603

AVIATOR'S SEAT

Hetsel A. Southerland, Centralia, Ill.

Application April 13, 1942, Serial No. 438,835

3 Claims. (Cl. 244—122)

This invention relates to new and useful improvements in aeronautics, and more particularly to an aircraft seat for aviators.

The principal object of the present invention is to provide a seat for aviators which can be made to swing outwardly of the ship in an emergency so that the aviator will be swung clear of the ship in order that he may safely parachute to earth.

Another important object of the invention is to provide an aviator's seat of the character stated which will utilize wind pressure as an operating force in swinging the seat to aviator discharging position.

Other objects and advantages of the invention will become apparent to the reader of the following description.

In the drawings:

Figure 1 represents a fragmentary side elevational view.

Figure 2 is a fragmentary top plan view.

Figure 3 is a cross-sectional view taken substantially on line 3—3 of Figure 1.

Figure 4 is an enlarged fragmentary horizontal sectional view taken substantially on line 4—4 of Figure 1.

Referring to the drawings wherein like numerals designate like parts, it can be seen that numeral 5 generally refers to an aircraft fuselage equipped with a windshield 6 at a position forwardly of a pilot's compartment.

In carrying out the present invention, the pilot's compartment is provided with a door 7 at one side thereof, this door having windows 8 at the upper portion thereof and a window portion 9 which extends half over the pilot's compartment. The rest of the roof opposite the portion 9 and overlying the pilot's compartment is also windowed, as denoted by numeral 10 in Figures 2 and 3.

The door 7 is provided with an inwardly disposed wall 11 forwardly from which projects a cushioned seat 12, having at its inner end an upstanding hip rest or shield 13. The outer end of the seat 12 has no obstructions. Suitable braces or brackets 14 can be provided on the wall 11 for supporting the seat 12.

A short distance above the seat 12 is a shoulder brace 15 attached to the wall 11 and higher is a head brace 16, it being preferable that these braces 15 and 16 be of spring material.

The door 7 is secured in place by a manually operative latch 17 at the forward edge thereof, while projecting forwardly from this edge, preferably at the lower portion thereof, is a forwardly projecting foot portion 18.

The inner end of the wall 11 at the lower portion thereof is provided with an elongated arcuate-shaped slide 19 having a notch 20 in the forward portion thereof.

Rotatable in bearings 21, 21 is a shaft 22 having a foot lever 23 at its forward end and a laterally disposed arm 24 at its opposite end, this arm having a depending pin 25 engageable in the notch 20 of the slide 19.

It can now be seen that when the pilot wishes to jump from the plane, he first releases his safety belt, then presses his foot on the lever 23, which releases the pin 25 from the slide 19. By now releasing the latch 17, the force of air against the leading edge of the foot portion 18 of the door will tend to swing the door outwardly and in this action, obviously, the seat 12 follows. The door 7 and seat 12 swing outwardly very suddenly, but of course this suddenness can be controlled by suitable shock absorbing means. The aviator by this action is thrown clear of the wings of his craft, as substantially shown in Figure 2.

Of course, to cut down any wind resistance whatever, it may be practical to have some suitable means for projecting the door slightly in an outward direction upon releasement of the latch, as a substitute for the above described leading edge of the door.

While the foregoing specification sets forth the invention in specific terms, it is to be understood that numerous changes in the shape, size and materials may be resorted to without departing from the spirit and scope of the invention as claimed hereinafter.

Having described the invention, what is claimed as new is:

1. In combination with an aircraft having a fuselage provided with a door opening at one side, and a horizontally swinging door for normally closing said opening, said door being hinged at its rear edge to swing outwardly and rearwardly to open position, a seat arranged at the inner side of and rigidly carried by said door to move with the latter, said seat being movable outwardly through said door opening to a laterally facing position externally of the fuselage when the door is fully opened, said door being suddenly movable to fully open position by the action of the wind thereon while the aircraft moves through the air, whereby to catapult the occupant from the seat laterally from the fuselage, and means to releasably secure the door closed, and a wall rigid with and extending in-

wardly from the hinged rear edge of the door, said seat being fixed on said wall and having an upstanding hip rest at the side thereof remote from the door.

2. In combination with an aircraft having a fuselage provided with a door opening at one side, and a horizontally swinging door for normally closing said opening, said door being hinged at its rear edge to swing outwardly and rearwardly to open position, a seat arranged at the inner side of and rigidly carried by said door to move with the latter, said seat being movable outwardly through said door opening to a laterally facing position externally of the fuselage when the door is fully opened, said door being suddenly movable to fully open position by the action of the wind thereon while the aircraft moves through the air, whereby to catapult the occupant from the seat laterally from the fuselage, and means to releasably secure the door closed, said door having a forward fin extension on the forward edge thereof to provide additional area on which the wind may act upon opening of the door.

3. In combination with an aircraft having a fuselage provided with a door opening at one side, and a horizontally swinging door for normally closing said opening, said door being hinged at its rear edge to swing outwardly and rearwardly to open position, a seat arranged at the inner side of and rigidly carried by said door to move with the latter, said seat being movable outwardly through said door opening to a laterally facing position externally of the fuselage when the door is fully opened, said door being suddenly movable to fully open position by the action of the wind thereon while the aircraft moves through the air, whereby to catapult the occupant from the seat laterally from the fuselage, and means to releasably secure the door closed, and a wall rigid with and extending inwardly from the hinged rear edge of the door, said seat being fixed on said wall and having an upstanding hip rest at the side thereof remote from the door, and forwardly projecting resilient shoulder and head braces carried by said wall above the seat, said braces being arranged to engage the shoulder and side of the head remote from the door.

HETSEL A. SOUTHERLAND.