April 1, 1952 | S. E. ADLER | Des. 166,290

RADIO CABINET

Filed Dec. 29, 1951 | 2 SHEETS—SHEET 1

Fig. 1.

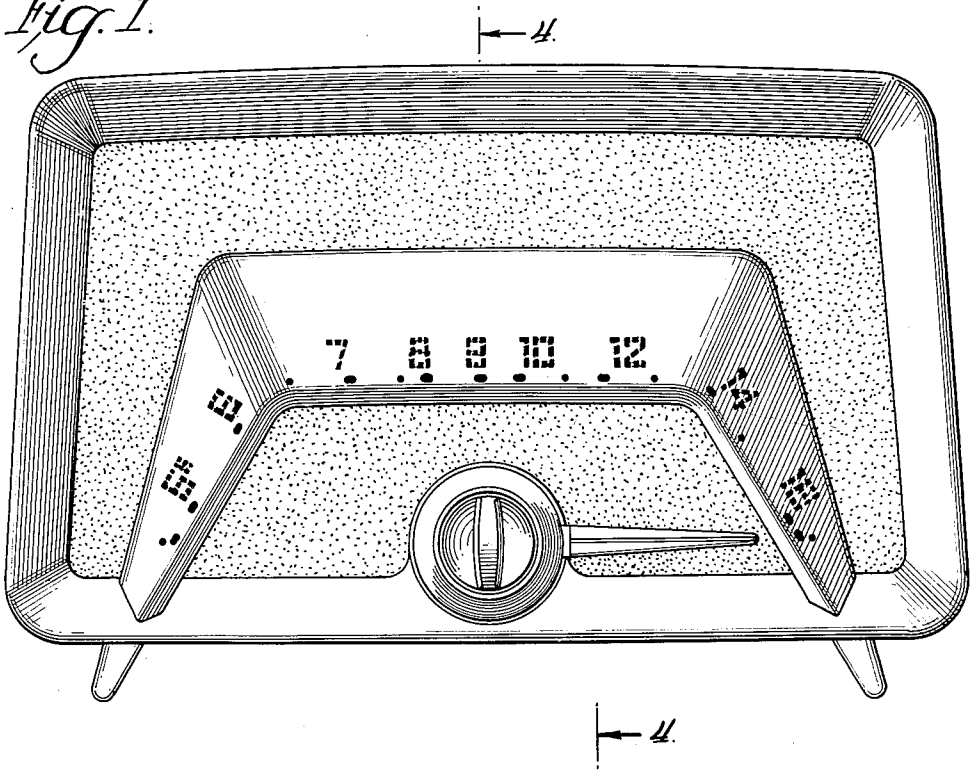

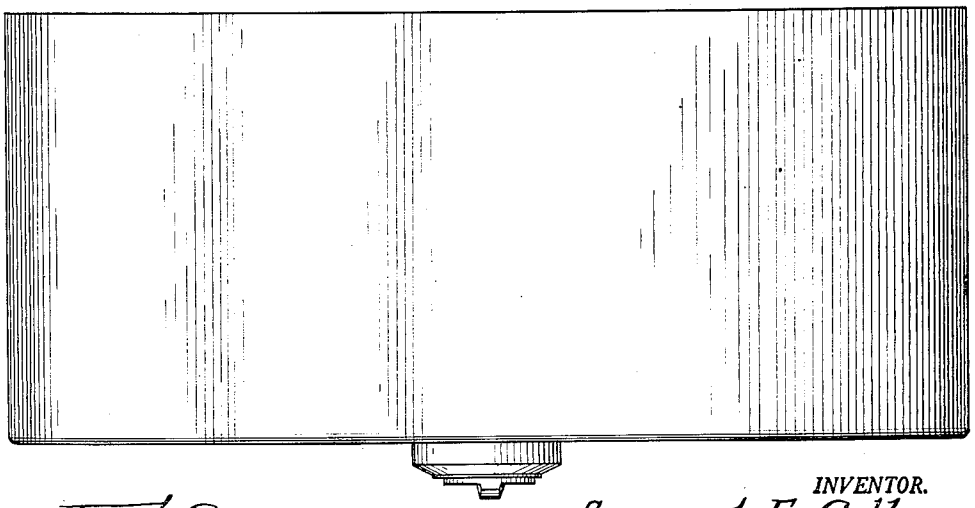

Fig. 2.

INVENTOR.
Samuel E. Adler
BY
J. W. Douglas
his Att'y.

April 1, 1952 S. E. ADLER Des. 166,290

RADIO CABINET

Filed Dec. 29, 1951 2 SHEETS—SHEET 2

Fig. 3.

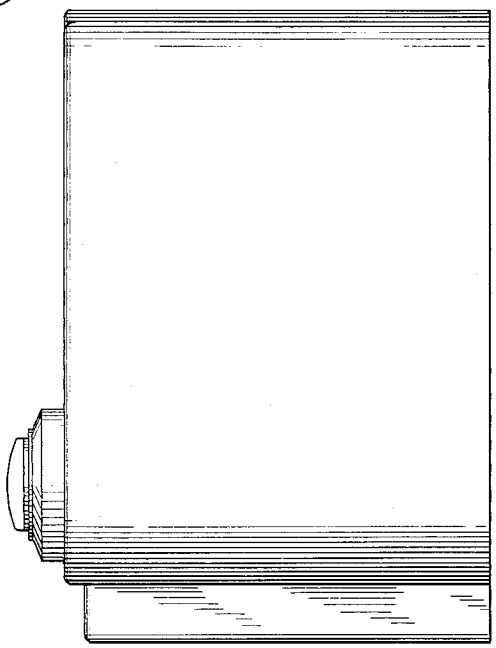

Fig. 4

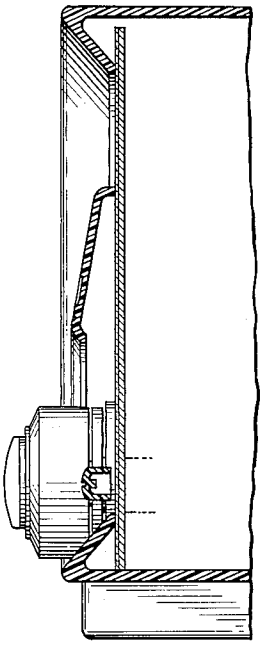

INVENTOR.
Samuel E. Adler
BY
J. D. Douglas
His Atty.

Patented Apr. 1, 1952

Des. 166,290

UNITED STATES PATENT OFFICE

166,290

RADIO CABINET

Samuel E. Adler, Chicago, Ill.

Application December 29, 1951, Serial No. 17,871

Term of patent 14 years

(Cl. D56—4)

To all whom it may concern:

Be it known that I, Samuel E. Adler, a citizen of the United States, residing at Chicago, in the county of Cook, State of Illinois, have invented a new, original, and ornamental Design for a Radio Cabinet, of which the following is a specification, reference being had to the accompanying drawing, forming part thereof.

Fig. 1 is a front elevational view of a radio cabinet showing my new design;

Fig. 2 is a top plan view of the same;

Fig. 3 is an elevational view of the right end of the cabinet; and

Fig. 4 is a fragmentary sectional view indicated by line 4—4 of Fig. 1.

The left side of the cabinet resembles the right side and the back is plain.

The dotted lines shown in Fig. 4 are for illustrative purposes only.

I claim:

The ornamental design for a radio cabinet, as shown and described.

SAMUEL E. ADLER.

REFERENCES CITED

The following references are of record in the file of this patent:

UNITED STATES PATENTS

Number	Name	Date
D. 161,364	Painter	Dec. 26, 1950