HU000032302T2

(19) **HU**

(11) Lajstromszám: **E 032 302**

(13) **T2**

MAGYARORSZÁG
Szellemi Tulajdon Nemzeti Hivatala

EURÓPAI SZABADALOM
SZÖVEGÉNEK FORDÍTÁSA

(21) Magyar ügyszám: **E 05 001849**
(22) A bejelentés napja: **2005. 01. 28.**

(51) Int. Cl.: ***A61M 5/145*** *(2006.01)*
B01F 9/00 *(2006.01)*
B01F 11/00 *(2006.01)*

(96) Az európai bejelentés bejelentési száma:
EP 20050001849
(97) Az európai bejelentés közzétételi adatai:
EP 1561483 A1 **2005. 08. 10.**
(97) Az európai szabadalom megadásának meghirdetési adatai:
EP 1561483 B1 **2017. 03. 15.**

(30) Elsőbbségi adatok:
MO20040028 **2004. 02. 06.** **IT**

(72) Feltaláló(k):
Azzolini, Graziano, 41032 Cavezzo (Prov. of Modena) (IT)

(73) Jogosult(ak):
SIDAM S.r.l., 41037 Mirandole-Franzione San Giacomo Roncole(MO) (IT)

(74) Képviselő:
Danubia Szabadalmi és Jogi Iroda Kft., Budapest

(54) **Infúziós szivattyú fecskendőkhöz**

Az európai szabadalom ellen, megadásának az Európai Szabadalmi Közlönyben való meghirdetésétől számított kilenc hónapon belül, felszólalást lehet benyújtani az Európai Szabadalmi Hivatalnál. (Európai Szabadalmi Egyezmény 99. cikk(1))

A fordítást a szabadalmas az 1995. évi XXXIII. törvény 84/H. §-a szerint nyújtotta be. A fordítás tartalmi helyességét a Szellemi Tulajdon Nemzeti Hivatala nem vizsgálta.

(19) Europäisches Patentamt
European Patent Office
Office européen des brevets

(11) EP 1 561 483 B1

(12) **EUROPEAN PATENT SPECIFICATION**

(45) Date of publication and mention of the grant of the patent:
15.03.2017 Bulletin 2017/11

(21) Application number: **05001849.8**

(22) Date of filing: **28.01.2005**

(51) Int Cl.:
A61M 5/145 *(2006.01)* ***B01F 9/00*** *(2006.01)*
B01F 11/00 *(2006.01)*

(54) Infusion pump for syringes

Infusionspumpe für Spritzen

Pompe à infusion pour des seringues

(84) Designated Contracting States:
AT BE BG CH CY CZ DE DK EE ES FI FR GB GR HU IE IS IT LI LT LU MC NL PL PT RO SE SI SK TR

(30) Priority: **06.02.2004 IT MO20040028**

(43) Date of publication of application:
10.08.2005 Bulletin 2005/32

(73) Proprietor: **SIDAM S.r.l.**
41037 Mirandola-Frazione San Giacomo Roncole (MO) (IT)

(72) Inventor: **Azzolini, Graziano**
41032 Cavezzo (Prov. of Modena) (IT)

(74) Representative: **Brunacci, Marco et al**
BRUNACCI & PARTNERS S.r.l.
Via Scaglia Est, 19-31
41126 Modena (IT)

(56) References cited:
WO-A-00/53242
WO-A-01/08727
WO-A-01/97901
WO-A-98/00187
US-A- 3 631 847
US-A- 4 838 857
US-A- 5 814 015
US-A1- 2003 117 888

Note: Within nine months of the publication of the mention of the grant of the European patent in the European Patent Bulletin, any person may give notice to the European Patent Office of opposition to that patent, in accordance with the Implementing Regulations. Notice of opposition shall not be deemed to have been filed until the opposition fee has been paid. (Art. 99(1) European Patent Convention).

EP 1 561 483 B1

Description

[0001] The present invention relates to an infusion pump for syringes.

[0002] Infusion pumps for syringes, used in the therapeutic field for the controlled and automated infusion of drugs, are known.

[0003] Known pumps are substantially constituted by a supporting frame, with which means for locking the cylindrical body of a syringe and means of the linear automated type for actuating the sliding of the plunger of the syringe are associated.

[0004] An electronic circuit controls and actuates the actuation means in order to dispense the drug contained in the syringe according to an infusion program (time, flow-rate, speed et cetera) that can be set from the outside by a health operator by means of a keypad and a display.

[0005] These known types of pump are not free from drawbacks, including the fact that if the fluid to be infused is constituted by a plurality of components they do not allow to mix them adequately as required.

[0006] Currently, mixing is performed manually by health operators, who shake the syringe in which the components of the fluid have been introduced, with consequent disadvantageous labor costs and long execution times and producing a homogenization that is imperfect and inconstant since it depends on the experience and dexterity of the operators.

[0007] Another drawback of known pumps is that they practically cannot be used to infuse fluids that contain microbubbles of air or gas, such as for example the contrast media used in imaging diagnostic methods, such as in particular echocontrast imaging.

[0008] The expression "echocontrast imaging" designates a sonogram that uses contrast media and utilizes the reflection of ultrasound by microbubbles entrained together with the contrast medium.

[0009] The infusion of these fluids must in fact follow immediately their mixing in order to prevent the microbubbles from distributing unevenly
inside them, and therefore to prevent the fractions of fluid that are infused in succession from containing too many or too few microbubbles, compromising the quality of the sonograms.

[0010] For this reason, the operator assigned to mixing them manually also then injects them manually immediately thereafter into the line for infusion to a patient; the time required to prepare a known type of pump would in fact eliminate the effects of mixing.

[0011] Currently, therefore, the mixing and infusion of these fluids that contain microbubbles of air or gas, as well as the immediate successive infusion of a physiological solution, are entirely manual, and this accordingly entails a further disadvantageous increase in labor costs and in execution times as well as inevitable and unpredictable inaccuracies and errors in execution due to the experience and dexterity of the operators.

[0012] Moreover, it should be noted that the contrast media of this type have high intrinsic costs, and therefore their incorrect mixing and/or their incorrect infusion, such as to compromise for example the quality of the resulting sonogram and prevent correct diagnosis, entail a waste of material that is disadvantageously onerous.

[0013] Infusion pump of known type are disclosed by US 2003/0117888 and WO 00/53242.

US 2003/0117888 describes an injector system that includes a powered injector and a syringe for injection of, for example, a contrast medium. The injector includes a housing and a drive member, seated inside the housing, that cooperates with the syringe plunger to inject a fluid from the interior of syringe into a patient. In a particular form of embodiment, represented on figure 5, the injector system also comprises a couple of hydraulic cylinders, of which a first hydraulic cylinder connected to the drive member and a second hydraulic cylinder operatively connected to the first hydraulic cylinder and suitable to act on the syringe plunger, and an agitation mechanism, suitable to rotate the syringe and one of the hydraulic cylinders for sliding the syringe plunger. The agitation mechanism is separated from the injector housing.

WO 00/53242 discloses a powered injector systems comprising an agitation device for mixing a contrast medium. The forms of embodiment represented in figures 1A and 1B disclose an injector systems including a pressurizing device that comprises a mechanical assembly and a piston acting on the plunger of a syringe. The injector illustrated in figure 1B and 4 comprises a casing in which the syringe is seated and that is movable in rotation on an axis perpendicular to the longitudinal axis of the syringe barrel Inside this casing are also seated the actuation means that, therefore, rotate together with the syringe around the axis perpendicular to the longitudinal axis of the syringe itself.

[0014] The aim of the present invention is to eliminate the above-mentioned drawbacks of known pumps, by providing an infusion pump for syringes that allows to mix the components of a fluid to be infused uniformly and constantly, to reduce labor use and costs, to contain the time required, and to limit the errors in performing mixing.

[0015] Another object of the present invention is to provide a pump that can be used easily to mix and infuse fluids that contain air or gas microbubbles uniformly, precisely and constantly and allows to reduce the waste of material.

[0016] Another object of the present invention is to provide an infusion pump that can be used particularly to infuse contrast media and optionally physiological solutions for echocontrast imaging.

[0017] Within this aim, another object of the present invention is to provide an infusion pump that is simple,

relatively easy to provide in practice, safe in use, effective in operation, and has a relatively low cost.

[0018] This aim and these and other objects that will become better apparent hereinafter are achieved by the present infusion pump for syringes, as defined in claim 1. Preferred embodiments are defined in the dependent claims.

[0019] Further characteristics and advantages of the present invention will become better apparent from the following detailed description of a preferred but not exclusive embodiment of an infusion pump for syringes, illustrated by way of non-limiting example in the accompanying drawings, wherein:

Figure 1 is a schematic axonometric view of an infusion pump for syringes according to the invention;
Figure 2 is a schematic axonometric view of the pump of Figure 1 without the covering and protective housing;
Figure 3 is a schematic enlarged-scale axonometric view of a detail of the supporting means and of the first actuation means of the pump according to the invention;
Figure 4 is a schematic top plan view of the detail of Figure 4;
Figure 5 is a schematic exploded view of the supporting means and of the first actuation means according to the invention;
Figure 6 is a schematic axonometric enlarged-scale view of a detail of the means for locking the auxiliary syringe of the pump according to the invention.

[0020] With reference to the figures, the reference numeral 1 generally designates an infusion pump for syringes.

[0021] The pump 1 comprises a supporting structure 2, which is divided into a base 2a and a housing 2b, means 3 for supporting a syringe 4, of the type constituted by a cylindrical body 4a inside which a plunger 4b slides, which can be rigidly associated with the syringe 4 and can be detachably associated with the supporting structure 2 so as to rotate alternately about a first axis A that is substantially perpendicular to a second longitudinal axis B of the syringe 4.

[0022] The syringe 4, rigidly coupled to the support means 3, is therefore alternately rotated about the axis A with a so-called oscillating or rocking motion.

[0023] Further, the pump 1 comprises first actuation means 5 of the automated type, for actuating the alternating rotation of the support or supporting means 3 and therefore of the syringe 4 that is rigidly coupled thereto; said first actuation means cooperate functionally with second actuation means 6 of the automated type for actuating the sliding of the plunger 4b.

[0024] Conveniently, the axis A lies on a substantially horizontal plane, while the alternated rotation angle has a breadth of less than 2π rad.

[0025] Further, the pump 1 comprises means 7 for locking an auxiliary syringe 8, of the type that is constituted by a cylindrical body 8a inside which a plunger 8b slides, said means being associated with the housing 2b, and third actuation means 9 of the automated type for actuating the sliding of the plunger 8b.

[0026] First sensing means 10 and second sensing means 11, such as for example on/off switches, detect the presence of the syringe 4 and of the auxiliary syringe 8 respectively; first control means 12 and second control means 13 detect the sliding respectively of the plunger 4b and of the plunger 8b; and means 14 for sensing the pressure applied to the plungers 4b and 8b are associated respectively with the second actuation means 6 and with the third actuation means 9.

[0027] The second actuation means 6 and the third actuation means 9 are of the linear type.

[0028] The first actuation means 5, the second actuation means 6 and the third actuation means 9 can be, for example, of the mechanical, pneumatic, hydraulic (hydrodynamic), electric or electromechanical type.

[0029] The pump 1 is provided with ON/OFF control means CM for activating and deactivating its operation, which are schematically shown in the figures cited above, can be advantageously operated with the feet, and are constituted for example by a pedal, a pushbutton or the like, for transmitting start and stop signals over a cable, wirelessly or via infrared carrier.

[0030] An electronic control and monitoring unit CU, such as an electric controller, advantageously of the programmable type, is functionally associated with the first actuation means 5, with the second actuation means 6, and optionally with the first means 10 for sensing the syringe 4, with the first control means 12 for controlling the sliding of the plunger 4b, with the means 14 for sensing the pressure applied to the plunger 4b, and with the actuation means.

[0031] If the auxiliary syringe 8 is also present, the electronic unit is also associated with the third actuation means 9, with the second means 11 for sensing the auxiliary syringe 8, with the second control means 13 for controlling the sliding of the plunger 8b, and with the means 14 for sensing the pressure applied to the plunger 8b.

[0032] The first actuation means 5, may for example comprise a shaft 15, which forms (extends along) the axis A and is supported, so that it can rotate, by first supports 16 formed in the base 2a of the supporting structure 2, first motor means 17, which are associated with the shaft 15, and means 18 for coupling the support means 3 to the shaft 15.

[0033] Conveniently, the first motor means 17 are of the step motor type and comprise an inverter.

[0034] The support means 3 comprise a tubular element 19, inside which it is possible to insert the cylindrical body 4a of the syringe 4; means for rigidly fixing the tubular element 19 to the cylindrical body 4a, for example of the interlocking, adhesive-bonding, or interference-coupling type, are provided.

[0035] In a particular embodiment, not shown, the fixing means may comprise a longitudinal cut, which interrupts the continuity of the tubular element 19, the inside diameter of which, in the configuration in which it is disengaged from the cylindrical body 4a, is substantially smaller than the outside diameter of said cylindrical body.

[0036] The coupling means 18 can be of the interlocking and/or contrast and/or friction type; they comprise for example a receptacle 20 for containing the support means 3, which is formed in the shaft 15 and is provided with cavities 21 in which it is possible to insert corresponding protrusions 22 formed in the support means 3.

[0037] Advantageously, the containment receptacle 20 has a profile that substantially duplicates the profile of the outer lateral surface of the support means 3.

[0038] Further, the support means 3 comprise a contoured portion 23 that has a contoured profile P, which is suitable to mate with the likewise contoured head 24a of a stem 24 that is inserted so that it can slide axially, with the interposition of elastic means 25, in a guide 26 that is formed at the free end of the shaft 15 at the containment receptacle 20; the head 24a protrudes within the containment receptacle 20 in order to mate with the portion 23 and push, by way of the reaction of the elastic means 25, against the support means 3 so as to fix them to the shaft 15.

[0039] The stem 24 has an end 24b, arranged opposite the head 24a, which protrudes externally from the free end of the shaft 15, proximate to which the first sensing means 10 are arranged; said sensing means are supported by a plate 27, which is fixed to the corresponding first support 16.

[0040] Insertion of the support means 3 in the containment receptacle 20 produces the sliding of the stem 24 toward the outside of the shaft 15, so that the end 24b acts on the first sensing means 10, which being thus activated report the presence of the support means 3 and therefore of the syringe 4 rigidly coupled thereto.

[0041] Each one of the second actuation means 6 and of the third actuation means 9 comprises straight guiding means 28, along which a slider 30 is associated so that it can slide alternately by way of bushes 29; a screw 31, which is substantially parallel to the straight guiding means 28 and is supported so that it can rotate by second supports 32 formed in the base 2a of the supporting structure 2 and is coupled to a female thread 33 formed in the slider 30, and second motor means 34, which are associated with the screw 31.

[0042] The slider 30 rigidly supports the end of a bar 35; a pusher 36 is fixed to the opposite end of said bar and is suitable to make contact with the plunger 4b or 8b, respectively, of the syringe 4 and of the auxiliary syringe 8.

[0043] Conveniently, the second motor means 34 are of the step motor type and comprise an inverter.

[0044] The pressure sensing means 14, constituted for example by a load cell, are fixed to the face of the pusher 36 that makes contact with the plunger 4b or 8b.

[0045] The means 7 for locking the auxiliary syringe 8 may be constituted for example by a receptacle, such as a slot 37 formed in a block 38 that is fixed to the housing 2b, inside which it is possible to insert the wings 39 formed at the inlet end of the cylindrical body 8a, and a clamp 40 for locking the cylindrical body 8a.

[0046] The first control means 12 and the second control means 13 comprise respective proximity sensors 41, switches or the like, which are suitable to detect the position of the corresponding slider 30 and/or sensors 42 for detecting the rotation of the corresponding screw 31.

[0047] A keypad 43 and a display 44 anchored to the housing 2b allow to select/set and monitor the operating program of the pump 1.

[0048] With particular but not exclusive reference to the case in which the pump 1, which comprises not only the means 3 for supporting the syringe 4 but also the means 7 for locking the auxiliary syringe 8, is used to perform sonograms with a contrast medium (echocontrast sonograms), the operation of the invention is as follows.

[0049] The echocontrast sonogram technique provides for the infusion in succession of a contrast medium that contains gas microbubbles and of a physiological solution, in quantities, with rates and with a time interval between the first infusion and the second infusion that can vary according to the type of diagnosis to be performed and according to the physical characteristics of the individual patient (weight, age, et cetera).

[0050] The syringe 4, to which the support means 3 are already rigidly anchored, and which is filled with a preset quantity of contrast medium, and the auxiliary syringe 8, filled with a preset quantity of physiological solution, are drained manually, the term "draining" being understood to designate the action meant to eliminate any residues of air contained in said syringes.

[0051] Once the operating program has been selected by means of the keypad 43, the two syringes 4 and 8 are anchored to the pump 1; in particular, the support means 3 are rigidly coupled to the shaft 15, while the cylindrical body 8a of the syringe 8 is anchored to the housing 2b by way of the locking means 7.

[0052] The first sensing means 10 and the second sensing means 11 report the presence of the syringe 4 and of the auxiliary syringe 8, respectively, to the electronic control and monitoring unit.

[0053] The outlets of the two syringes 4 and 8 are connected to the inlets of a conventional infusion line of the Y-shaped type, the output of which is suitable to be connected to a duct for feeding to a patient.

[0054] By means of a command imparted from the keypad 43, the shaft 15 is actuated by the first motor means 17 so as to rotate alternately about the axis A through a preset angle, as shown by the arrows F; the microbubbles of the contrast medium contained in the syringe 4 are thus mixed uniformly and distributed within it.

[0055] After a time interval that can be preset, the electronic unit stops the first motor means 17 and starts the

second actuation means 6 and the third actuation means 9 to drain the infusion line, the outlet of which is not yet connected to the duct for feeding to the patient.

[0056] Once draining of the infusion line has ended and once its outlet has been connected to the duct for feeding to a patient, the electronic unit automatically restarts the first motor means 17 for another period of time during which the microbubbles of the contrast medium contained in the syringe 4, which is rotated alternately about the axis A with an oscillating motion, are mixed and distributed uniformly inside it, the pusher 36 of the second actuation means 6 being moved away beforehand from the plunger 4b.

[0057] The medical personnel assigned to performing the sonogram, at its own discretion and despite having both hands occupied in operating the sonogram probe and in managing the processing of the images that it transmits to a monitor, then activates, by acting with a foot on the pedal, the operation of the pump 1 to infuse the contrast medium and then automatically infuse the physiological solution without further interventions of any health personnel.

[0058] Once this time interval has elapsed, the electronic unit starts the second motor means 34 of the second actuation means 6 in order to infuse the contrast medium, as shown by the arrow G; end of the infusion is reported by the sensors 41, which report to the electronic unit that the stroke limit has been reached by the corresponding slider 30.

[0059] Once the second motor means 34 of the second actuation means 6 have stopped, the electronic unit starts the second motor means 34 of the third actuation means 9 in order to infuse in succession the physiological solution, as shown by the arrow H; as before, the end of this second infusion is reported by the corresponding sensors 41, which report to the electronic unit that the stroke limit has been reached by the corresponding slider 30.

[0060] Finally, the electronic unit reverses the rotation of the second motor means 34 and of the second and third actuation means 6 and 9 in order to return the corresponding pushers 36 to the beginning of their stroke, as shown by the arrows L.

[0061] It should be noted that the initial position of the two plungers 4b and 8b, which depends on the amounts of contrast medium and of physiological solution loaded in the corresponding syringes, is detected simultaneously by the pressure sensing means 14 and by the rotation sensors 42; the former report the contact pressure with the plungers 4b and 8b and the latter report the number of turns made by the respective second motor means 34 before reaching said plungers.

[0062] The pressure sensing means 14 further allow to detect, during infusion, any abnormal increase in pressure on the plungers 4b and 8b, which indicates for example a venous occlusion.

[0063] This technique can be used for diagnosis for example in cardiology, neurology, gastroenterology, or for targeted therapeutic treatments.

[0064] The operation of the pump 1 in possible different applications can be deduced easily by the person skilled in the art; it can be used whenever it is necessary to mix the components of a fluid to be infused.

[0065] In practice it has been found that the described invention achieves the intended aim and objects.

[0066] The pump according to the invention in fact allows to automate not only the draining and infusion but also the mixing of the fluid to be infused, to mix said fluid homogeneously, precisely and in a short time without the intervention of auxiliary health personnel, and this accordingly entails a containment of labor costs and of wastes of material, and allows medical personnel to perform mixing and infusion automatically and autonomously.

[0067] Finally, it should be noted that the alternated rotation of the syringe that contains the fluid to be mixed about an axis that is substantially perpendicular to the longitudinal axis of said syringe causes the shaking and entrainment of said fluid between the two ends of said syringe, and this ensures uniform mixing, which instead cannot be obtained if the rotation of the syringe occurs about the longitudinal axis thereof; due to the low viscosity of the fluids that are normally used, they in fact would not be entrained in rotation and therefore would not be stirred correctly.

[0068] The invention thus conceived is susceptible of numerous modifications and variations, all of which are within the scope of the appended claims.

[0069] In practice, the materials used, as well as the shapes and the dimensions, may be any according to requirements without thereby abandoning the scope of the protection of the appended claim.

[0070] Where technical features mentioned in any claim are followed by reference signs, those reference signs have been included for the sole purpose of increasing the intelligibility of the claims and accordingly, such reference signs do not have any limiting effect on the interpretation of each element identified by way of example by such reference signs.

Claims

1. A infusion pump for syringes, comprising a supporting structure (2),
   means (3) for supporting a syringe (4) that are rigidly associable with said syringe (4) and are associated with said supporting structure (2) so that they can rotate alternately about an axis (A) that is substantially perpendicular to the longitudinal axis (B) of said syringe, said supporting means (3) comprising a tubular element (19), inside which is insertable the cylindrical body (4a) of said syringe (4) and means for fixing said tubular element (19) that is rigidly coupled to said cylindrical body (4a) of the syringe (4),
   first means (5) for actuating said alternating rotation

and comprising a shaft (15), which forms said perpendicular axis (A) and is supported so that it can rotate by said supporting structure (2), first motor means (17) associated with said shaft (15) and means (18) for coupling said supporting means (3) to said shaft (15)
and second means (6) for actuating the sliding of the plunger (4b) of said syringe (4), which cooperate functionally with said first actuation means (5) and comprising a bar (35) and a pusher (36) fixed to one end of said bar (35) and suitable to contact the plunger (4b) of the syringe (4),
characterized in that it comprises an electronic control and monitoring unit (CU) which is functionally associated with said first and second actuating means (5, 6) to actuate said first motor means (17) so as to rotate alternately said shaft (15) about the axis (A) through a preset angle, and to actuate said second actuation means (6) to move the pusher (36) of said second actuation means (6) away beforehand from the plunger (4b), and to stop, after a time interval that can be preset, said first motor means (17) and start said second actuation means (6).

2. The pump according to claim 1, **characterized in that** said perpendicular axis (A) lies on a substantially horizontal plane.

3. The pump according to claim 1 or 2, **characterized in that** the angle of said alternating rotation is less than 2πrad.

4. The pump according to one or more of the preceding claims, **characterized in that** it comprises means (7) for locking an auxiliary syringe (8), which are associated with said supporting structure (2), and third means (9) for actuating the sliding of the plunger of said auxiliary syringe.

5. The pump according to one or more of the preceding claims, **characterized in that** it comprises first means (10) for sensing said syringe (4) and/or second means (11) for sensing said auxiliary syringe (8).

6. The pump according to one or more of the preceding claims, **characterized in that** it comprises first means (12) for controlling sliding of the plunger (4b) of said syringe (4).

7. The pump according to one or more of the preceding claims from 4 to 6, **characterized in that** it comprises second means (13) for controlling sliding of the plunger (8b) of said auxiliary syringe (8).

8. The pump according to one or more of the preceding claims, **characterized in that** at least one of said second and third actuation means (5, 6, 9) comprises means (14) for sensing the pressure applied to the plunger (4b, 8b) of said syringe (4) and of said auxiliary syringe (8), respectively.

9. The pump according to one or more of the preceding claims, **characterized in that** the electronic control and monitoring unit (CU) is functionally associated with at least said first and second actuation means (5, 6, 9).

10. The pump according to one or more of the preceding claims, **characterized in that** said supporting means (3) comprise a portion (23) that has a contoured profile (P) and is suitable to mate with the head (24a) of a stem (24) that is inserted so as to be axially slidable, with the interposition of elastic means (25), in a guide (26) formed in said shaft (15) at a containment receptacle (20) of said shaft (15) said head (24a) protruding into said containment receptacle (20), the coupling between said head (24a) and said contoured portion (23) being suitable to fix said supporting means (3) to said shaft (15).

11. The pump according to one or more of claim 5 or claims 6 to 10 when dependent upon claim 5,
characterized in that said first sensing means (10) are associated with
said shaft (15).

12. The pump according to claim 10 as dependent upon claim 5 or claim 11 as dependent upon claim 10, **characterized in that** the end (24b) of said stem (24) that lies opposite said head (24a) protrudes externally from said shaft (15), said first sensing means (10) being arranged proximate thereto, said stem (24) being suitable to actuate said first sensing means (10).

13. The pump according to one or more of the claims 4-13, **characterized in that** at least one of said second and third actuation means (6, 9) comprises straight guiding means (28), along which a slider (30) is associated so that it can slide alternately; a screw (31), which is substantially parallel to said straight guiding means (28) and is supported so that it can rotate by said supporting structure (2) and is coupled to a female thread (33) formed in said slider (30); second motor means (34), which are associated with said screw (31); and a pusher (36), which is rigidly associated with said slider (30) and is suitable to make contact with the plunger (4b, 8b) of said syringe (4) or of said auxiliary syringe (8), respectively.

14. The pump according to one or more of the claims 4-13, **characterized in that** said locking means (7) comprise a receptacle (37, 38) for accommodating the wings (3a) formed at the inlet end of said cylindrical body (8a) of the auxiliary syringe (8) and a clamp (40) for locking said cylindrical body (8a).

Patentansprüche

1. Infusionspumpe für Spritzen, umfassend
eine Tragstruktur (2);
Mittel (3) zum Tragen einer Spritze (4), die starr mit der Spritze (4) verbunden werden können und mit der Tragstruktur (2) so verbunden sind, dass sie sich alternierend um eine Achse (A) drehen können, die im Wesentlichen senkrecht zur Längsachse (B) der Spritze ist, wobei die Tragmittel (3) ein Rohrelement (19), in welches der zylindrische Körper (4a) der Spritze (4) eingeführt werden kann, und Mittel zum Befestigen des Rohrelements (19) umfassen, das starr mit dem zylindrischen Körper (4a) der Spritze (4) gekoppelt ist,
erste Mittel (5) zum Betätigen der alternierenden Drehung und einen Schaft (15) umfassend, der die senkrechte Achse (A) bildet und durch die Tragstruktur (2) so getragen wird, dass er sich drehen kann, erste Antriebsmittel (17), die mit dem Schaft (15) verbunden sind, und Mittel (18) zum Koppeln der Tragmittel (3) mit dem Schaft (15),
und zweite Mittel (6) zum Betätigen der Verschiebung des Kolbens (4b) der Spritze (4), die funktionell mit den ersten Betätigungsmitteln (5) zusammenwirken und eine Stange (35) und einen Drücker (36) umfassen, der an einem Ende der Stange (35) befestigt und geeignet ist, mit dem Kolben (4b) der Spritze (4) in Kontakt zu treten,
dadurch gekennzeichnet, dass sie eine elektronische Steuerungs- und Überwachungseinheit (CU) umfasst, die funktionell mit den ersten und zweiten Betätigungsmitteln (5, 6) verbunden ist, um die ersten Antriebsmittel (17) zu betätigen, um den Schaft (15) alternierend durch einen voreingestellten Winkel um die Achse (A) zu drehen, und um die zweiten Betätigungsmittel (6) zu betätigen, um den Drücker (36) des zweiten Betätigungsmittels (6) im Voraus vom Kolben (4b) weg zu bewegen, und um nach einem Zeitintervall, das voreingestellt werden kann, die ersten Antriebsmittel (17) zu stoppen und die zweiten Betätigungsmittel (6) zu starten.

2. Pumpe nach Anspruch 1, **dadurch gekennzeichnet, dass** die senkrechte Achse (A) auf einer im Wesentlichen horizontalen Ebene liegt.

3. Pumpe nach Anspruch 1 oder 2, **dadurch gekennzeichnet, dass** der Winkel der alternierenden Drehung weniger als 2π rad beträgt.

4. Pumpe nach einem oder mehreren der vorhergehenden Ansprüche, **dadurch gekennzeichnet, dass** sie Mittel (7) zum Verriegeln einer Zusatzspritze (8), die mit der Tragstruktur (2) verbunden sind, und dritte Mittel (9) zum Bestätigen der Verschiebung des Kolbens der Zusatzspritze umfasst.

5. Pumpe nach einem oder mehreren der vorhergehenden Ansprüche, **dadurch gekennzeichnet, dass** sie erste Sensormittel (10) der Spritze (4) und/oder zweite Sensormittel (11) der Zusatzspritze umfasst.

6. Pumpe nach einem oder mehreren der vorhergehenden Ansprüche, **dadurch gekennzeichnet, dass** sie erste Mittel (12) zum Steuern der Verschiebung des Kolbens (4b) der Spritze (4) umfasst.

7. Pumpe nach einem oder mehreren der vorhergehenden Ansprüche 4 bis 6, **dadurch gekennzeichnet, dass** sie zweite Mittel (13) zum Steuern der Verschiebung des Kolbens (8b) der Zusatzspritze (8) umfasst.

8. Pumpe nach einem oder mehreren der vorhergehenden Ansprüche, **dadurch gekennzeichnet, dass** mindestens eines der zweiten und dritten Betätigungsmittel (5, 6, 9) Mittel (14) zum Überwachen des Drucks umfasst, der auf den Kolben (4b, 8b) der Spritze (4) bzw. der Zusatzspritze (8) ausgeübt wird.

9. Pumpe nach einem oder mehreren der vorhergehenden Ansprüche, **dadurch gekennzeichnet, dass** die elektronische Steuerungs- und Überwachungseinheit funktionell mit den ersten und zweiten Betätigungsmitteln (5, 6, 9) verbunden ist.

10. Pumpe nach einem oder mehreren der vorhergehenden Ansprüche, **dadurch gekennzeichnet, dass** die Tragmittel (3) einen Abschnitt (23) umfassen, der ein konturiertes Profil (P) aufweist und geeignet ist, mit dem Kopf (24a) eines Bolzens (24) zusammenzupassen, der unter Zwischenhaltung elastischer Mittel (25) axial verschiebbar in eine Führung (26) eingeführt ist, die im Schaft (15) an einem Aufnahmebehälter (20) des Schafts (15) ausgebildet ist, wobei der Kopf (24a) in den Aufnahmebehälter (20) vorsteht, und die Kopplung zwischen dem Kopf (24a) und dem konturierten Abschnitt (23) geeignet ist, die Tragmittel (3) am Schaft (15) zu befestigt.

11. Pumpe nach einem oder mehreren der Ansprüche 5 oder 6 bis 10, wenn abhängig von Anspruch 5, **dadurch gekennzeichnet, dass** die ersten Sensormittel (10) mit dem Schaft (15) verbunden sind.

12. Pumpe nach Anspruch 10, wenn abhängig von Anspruch 5, oder Anspruch 11, wenn abhängig von Anspruch 10, **dadurch gekennzeichnet, dass** das Ende (24b) des Bolzens (24), das dem Kopf (24a) gegenüberliegt, vom Schaft (15) extern vorsteht, wobei die ersten Sensormittel (10) in der Nähe davon angeordnet sind, und der Bolzen (24) so ausgelegt ist, dass er die ersten Sensormittel (10) auslöst.

13. Pumpe nach einem oder mehreren der Ansprüche 4 bis 13, **dadurch gekennzeichnet, dass** mindestens eines der zweiten und dritten Betätigungsmittel (6, 9) gerade Führungsmittel (28), entlang welcher ein Schieber (30) so verbunden ist, dass er sich alternierend verschieben kann; eine Schraube (31), die im Wesentlichen parallel zu den geraden Führungsmitteln (28) ist und durch die Tragstruktur (2) so getragen wird, dass sie sich drehen kann, und mit einem Innengewinde (33) gekoppelt ist, das im Schieber (30) ausgebildet ist; zweite Antriebsmittel (34), die mit der Schraube (31) verbunden sind; und einen Drücker (36) umfasst, der mit dem Schieber (30) starr verbunden und so ausgelegt ist, dass er mit dem Kolben (4b, 8b) der Spritze (4) bzw. der Zusatzspritze (8) Kontakt herstellt.

14. Pumpe nach einem oder mehreren der Ansprüche 4 bis 13, **dadurch gekennzeichnet, dass** die Verriegelungsmittel (7) ein Behältnis (37, 38) zum Aufnehmen der Flügel (3a), die am Einlassende des zylindrischen Körpers (8a) der Zusatzspritze (8) ausgebildet sind, und eine Klemme (40) zum Verriegeln des zylindrischen Körpers (8a) umfassen.

Revendications

1. Pompe à infusion pour des seringues, comprenant une structure de support (2),
des moyens (3) de support d' une seringue (4) qui sont aptes à être associés de manière rigide à ladite seringue (4) et sont associés à ladite structure de support (2) de manière à pouvoir tourner en rotation en alterné autour d'un axe (A) qui est sensiblement perpendiculaire à l'axe longitudinal (B) de ladite seringue, lesdits moyens de support (3) comprenant un élément tubulaire (19), à l'intérieur duquel peut être inséré le corps cylindrique (4a) de ladite seringue (4) et des moyens pour fixer ledit élément tubulaire (19) qui est couplé de manière rigide audit corps cylindrique (4a) de la seringue (4),
des premiers moyens (5) pour actionner ladite rotation alternée et comprenant un arbre (15), qui forme ledit axe perpendiculaire (A) et est supporté de manière à pouvoir tourner en rotation par rapport à ladite structure de support (2), des premiers moyens de moteur (17) associés audit arbre (15) et des moyens (18) pour coupler lesdits moyens de support (3) audit arbre (15) et des seconds moyens (6) pour actionner le coulissement du piston (4b) de ladite seringue (4), qui coopèrent de manière fonctionnelle avec lesdits premiers moyens d'actionnement (5) et comprennent une barre (35) et un poussoir (36) fixé à une extrémité de ladite barre (35) et apte à entrer en contact avec le piston (4b) de la seringue (4),
caractérisée en ce qu'elle comprend une unité de commande et de contrôle électronique (CU) qui est fonctionnellement associée auxdits premiers et seconds moyens d'actionnement (5, 6) pour actionner lesdits premiers moyens de moteur (17) afin de faire tourner en rotation en alterné ledit arbre (15) autour de l'axe (A) à travers un angle préréglé, et pour actionner lesdits seconds moyens d'actionnement (6) pour éloigner préalablement le poussoir (36) desdits seconds moyens d'actionnement (6) du piston (4b), et pour arrêter, après un intervalle de temps qui peut être préréglé, lesdits premiers moyens de moteur (17) et démarrer lesdits seconds moyens d'actionnement (6).

2. Pompe selon la revendication 1, **caractérisée en ce que** ledit axe perpendiculaire (A) se trouve sur un plan sensiblement horizontal.

3. Pompe selon la revendication 1 ou 2, **caractérisée en ce que** l'angle de ladite rotation alternée est inférieur à 2πrad.

4. Pompe selon l'une ou plusieurs des revendications précédentes, **caractérisée en ce qu'**elle comprend des moyens (7) pour verrouiller une seringue auxiliaire (8), qui sont associés à ladite structure de support (2), et des troisièmes moyens (9) pour actionner le coulissement du piston de ladite seringue auxiliaire.

5. Pompe selon l'une ou plusieurs des revendications précédentes, **caractérisée en ce qu'**elle comprend des premiers moyens (10) pour capter ladite seringue (4) et/ou des seconds moyens (11) pour capter ladite seringue auxiliaire (8).

6. Pompe selon l'une ou plusieurs des revendications précédentes, **caractérisée en ce qu'**elle comprend des premiers moyens (12) pour commander le coulissement du piston (4b) de ladite seringue (4).

7. Pompe selon l'une ou plusieurs des revendications précédentes de 4 à 6, **caractérisée en ce qu'**elle comprend des seconds moyens (13) pour commander le coulissement du piston (8b) de ladite seringue auxiliaire (8).

8. Pompe selon l'une ou plusieurs des revendications précédentes, **caractérisée en ce que** au moins l'un desdits seconds et troisièmes moyens d'actionnement (5, 6, 9) comprend des moyens (14) pour capter la pression appliquée sur le piston (4b, 8b) de ladite seringue (4) et de ladite seringue auxiliaire (8), respectivement.

9. Pompe selon l'une ou plusieurs des revendications précédentes, **caractérisée en ce que** l'unité de commande et de contrôle électronique CU) est fonctionnellement associée à au moins lesdits premiers

et seconds moyens d'actionnement (5, 6, 9).

10. Pompe selon l'une ou plusieurs des revendications précédentes, **caractérisée en ce que** lesdits moyens de support (3) comprennent une portion (23) présentant un profil à contour (P) et qui est apte à épouser la tête (24a) d'une tige (24) qui est insérée de manière à être apte à coulisser axialement, avec interposition de moyens élastiques (25), dans un guide (26) pratiqué dans ledit arbre (15) au niveau d'un réceptacle de confinement (20) dudit arbre (15), ladite tête (24a) faisant saillie vers l'intérieur dudit réceptacle de confinement (20), le couplage entre ladite tête (24a) et ladite portion à contour (23) étant apte à fixer lesdits moyens de support (3) audit arbre (15).

11. Pompe selon l'une ou plusieurs parmi l'une des revendications 5 ou 6 à 10 lorsque elle(s) dépend(ent) de la revendication 5, **caractérisée en ce que** lesdits premiers moyens de capteur (10) sont associés audit arbre (15).

12. Pompe selon la revendication 10 lorsqu'elle dépend de la revendication 5 ou selon la revendication 11 lorsqu'elle dépend de la revendication 10, **caractérisée en ce que** l'extrémité (24b) de ladite tige (24) qui se trouve à l'opposé de ladite tête (24a) fait saillie vers l'extérieur depuis ledit arbre (15), lesdits premiers moyens de capteur (10) étant agencés à proximité de celle-ci, ladite tige (24) étant apte à actionner lesdits premiers moyens de capteur (10).

13. Pompe selon l'une ou plusieurs des revendications de 4 à 13, **caractérisée en ce que** au moins l'un desdits seconds et troisièmes moyens d'actionnement (6, 9) comprend des moyens de guidage rectilignes (28), le long desquels un curseur (30) est associé de manière à pouvoir coulisser en alterné ; une vis (31), qui est sensiblement parallèle auxdits moyens de guidage rectilignes (28) et est supportée de manière à pouvoir tourner en rotation par ladite structure de support (2) et est couplée à un filetage femelle (33) pratiqué dans ledit curseur (30) ; des seconds moyens de moteur (34), qui sont associés à ladite vis (31) ; et un poussoir (36), qui est associé de manière rigide audit curseur (30) et est apte à entrer en contact avec le piston (4b, 8b) de ladite seringue (4) ou de ladite seringue auxiliaire (8), respectivement.

14. Pompe selon l'une ou plusieurs des revendications de 4 à 13, **caractérisée en ce que** lesdits moyens de verrouillage (7) comprennent un réceptacle (37, 38) pour loger les ailettes (3a) formées à l'extrémité d'entrée dudit corps cylindrique (8a) de la seringue auxiliaire (8) et une pince de serrage (40) pour verrouiller ledit corps cylindrique (8a).

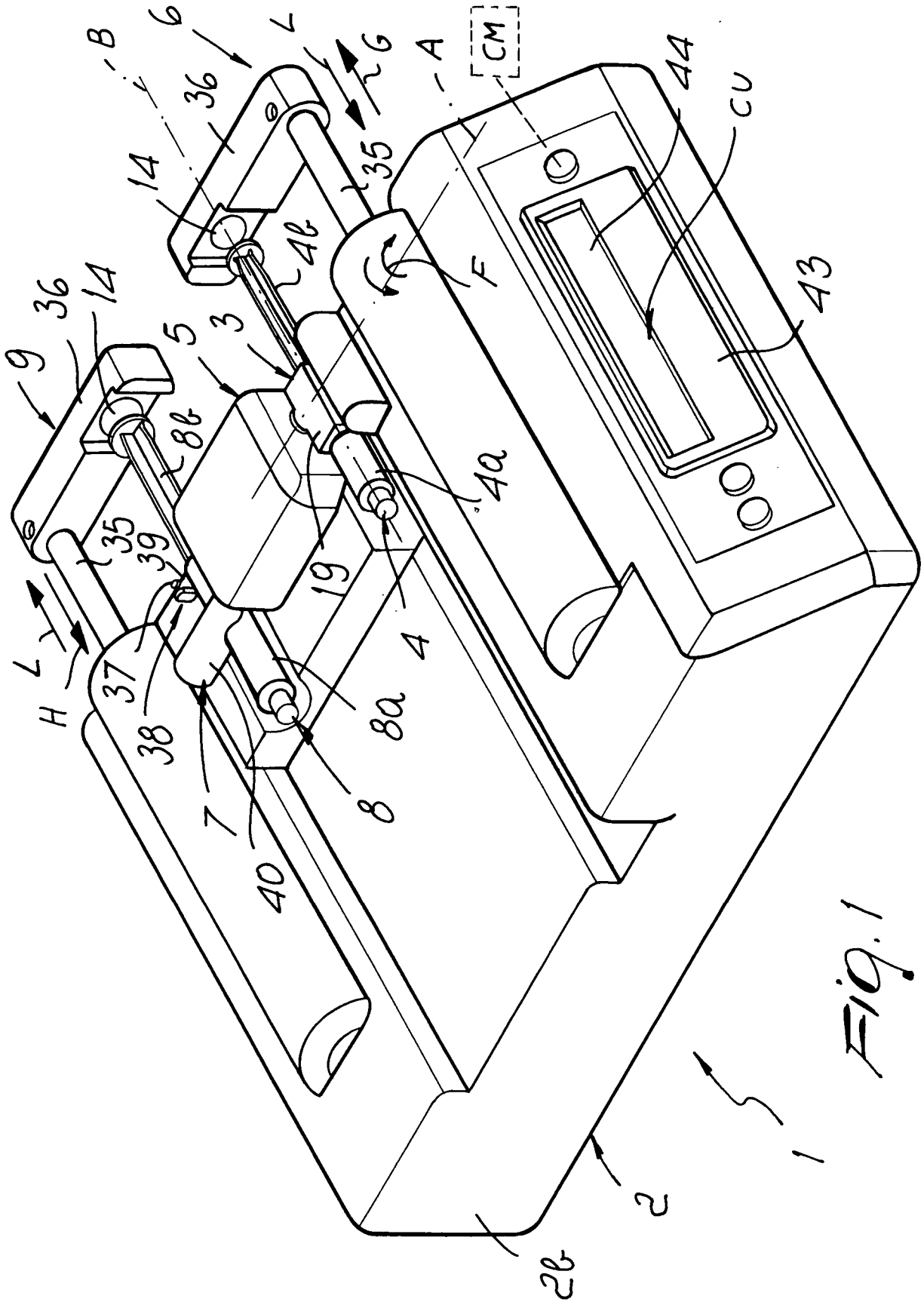
B
6
L
G
A
CM
44
CU
36
14
35
4b
F
43
9
36
14
5
3
8b
4a
35
39
19
4
L
H
37
38
8a
7
8
40
1
2
2b

Fig. 1

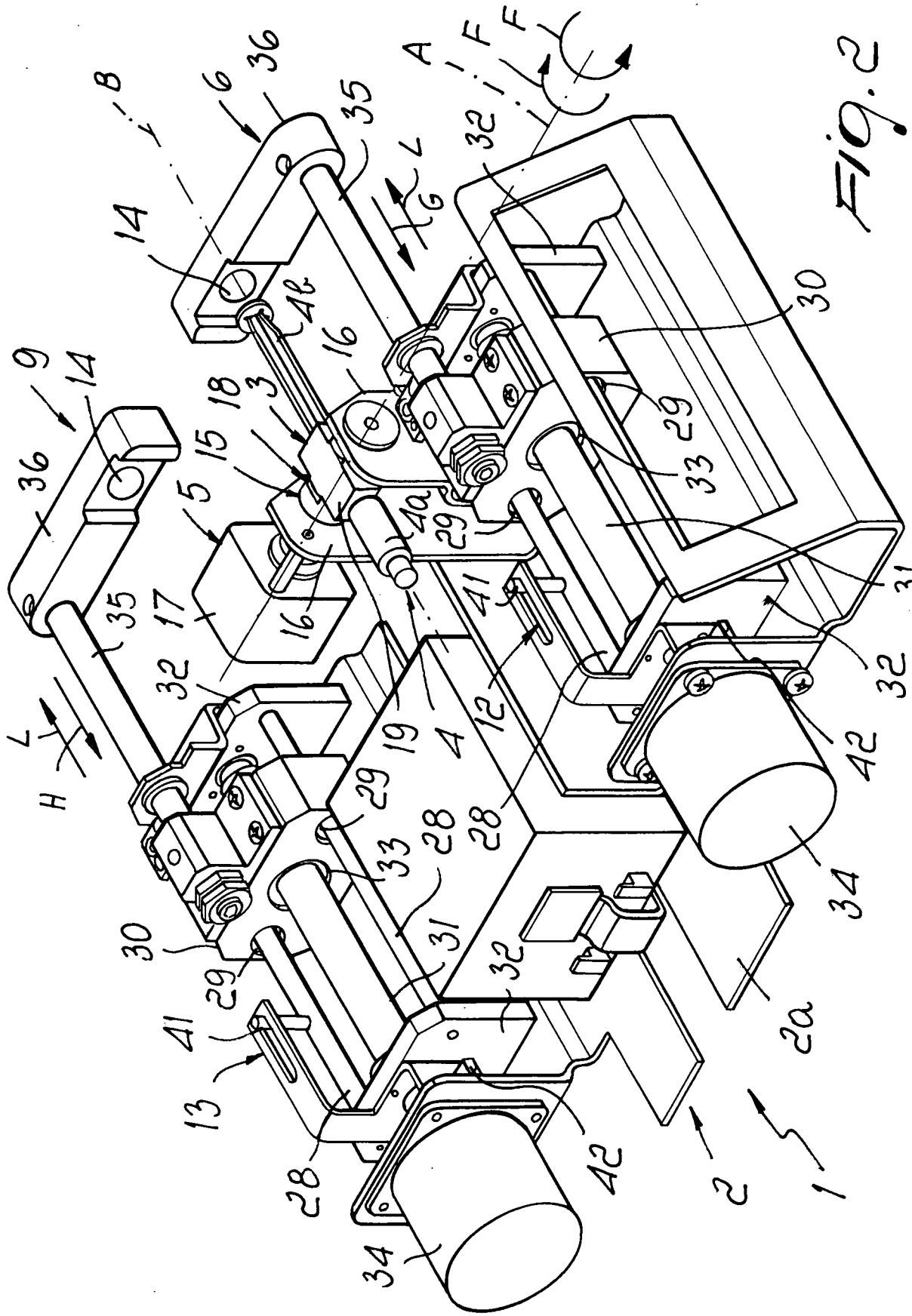
1
2
2a
3
4
4a
4b
5
6
8
9
12
13
14
15
16
17
18
19
28
29
30
31
32
33
34
35
36
41
42
A
F
G
H
L

Fig. 2

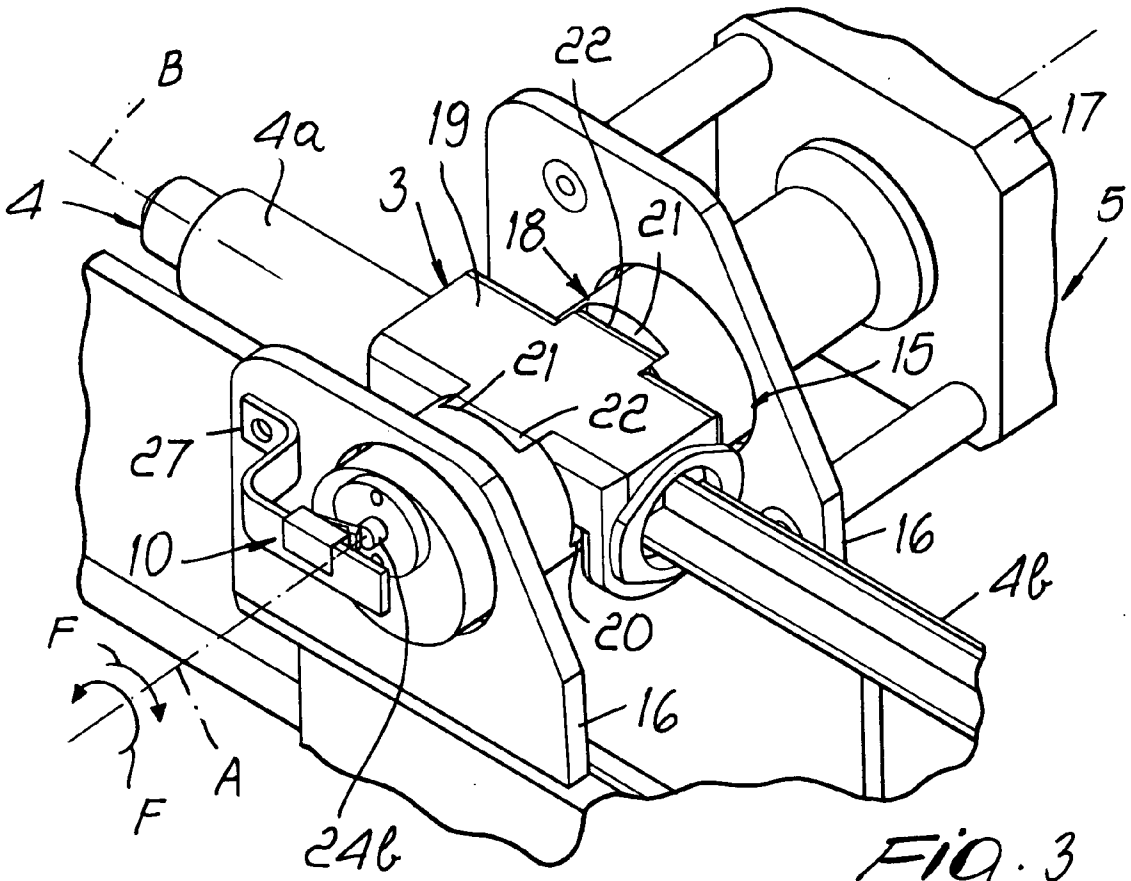
B
4
4a
3
19
22
18
21
17
5
15
21
22
27
10
16
4b
20
F
F
A
16
24b

Fig. 3

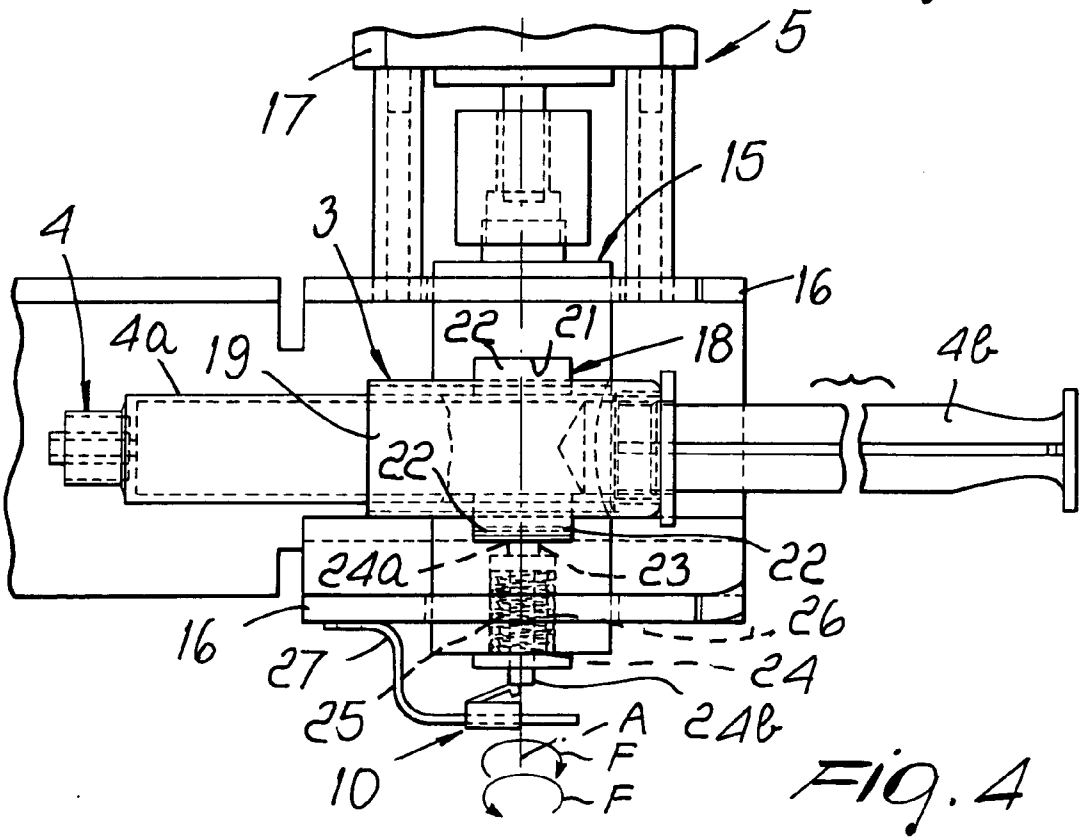
5
17
15
4
3
16
4a
19
22
21
18
4b
22
24a
23
22
16
26
27
24
25
24b
A
10
F
F

Fig. 4

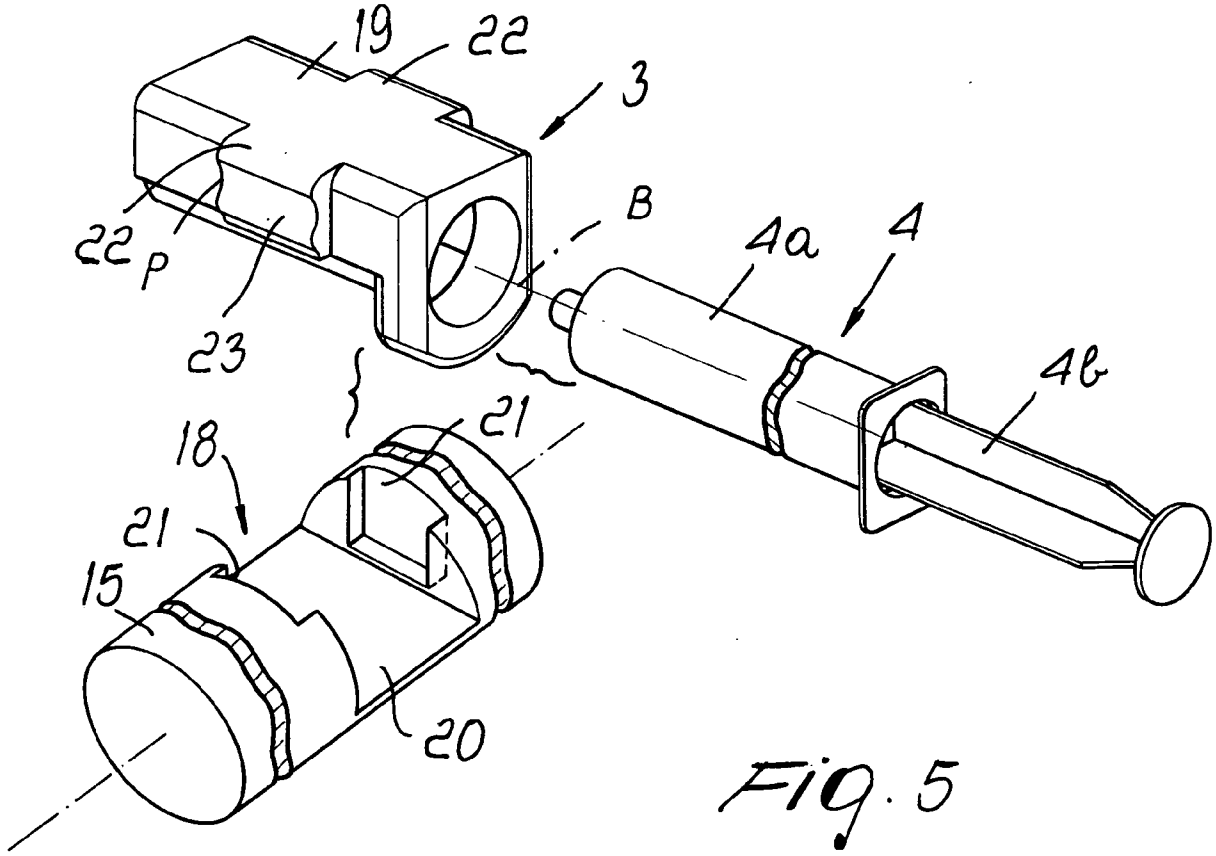

Fig. 5

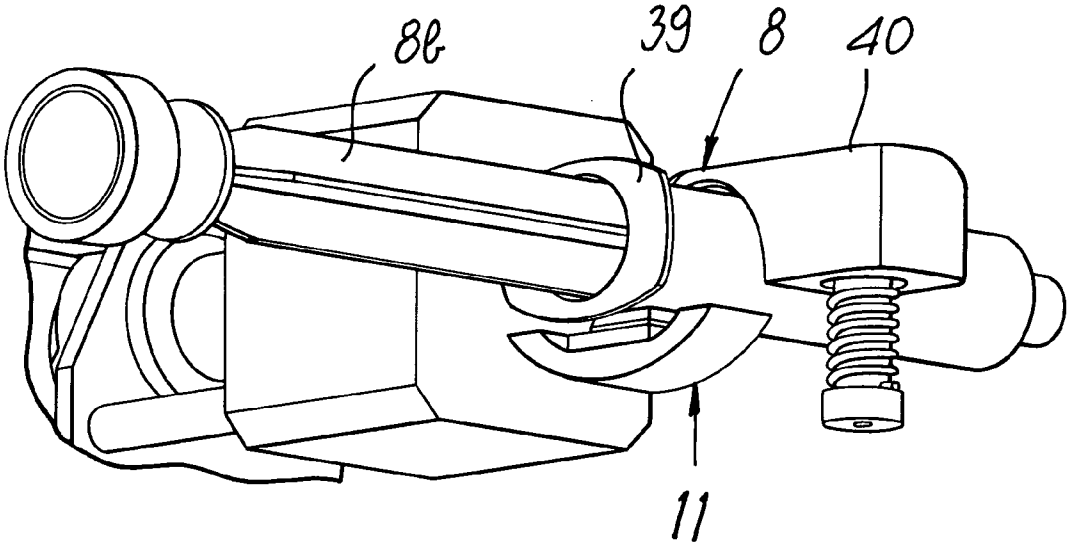

Fig. 6

REFERENCES CITED IN THE DESCRIPTION

This list of references cited by the applicant is for the reader's convenience only. It does not form part of the European patent document. Even though great care has been taken in compiling the references, errors or omissions cannot be excluded and the EPO disclaims all liability in this regard.

Patent documents cited in the description

- US 20030117888 A **[0013]**
- WO 0053242 A **[0013]**

INFÚZIÓS SZIVATTYÚ FECSKENDŐKHÖZ

SZABADALMI IGÉNYPONTOK

SZTNH-100050947

1. Infúziós szivattyú fecskendőkhöz, ami tartalmaz egy tartószerkezetet (2),

eszközöket (3) a fecskendő (4) megtartására, amik mereven összekapcsolhatók a fecskendővel (4) és úgy köthetők össze a tartószerkezettel (2), hogy alternálva forgathatók egy olyan tengely (A) körül, ami lényegében merőleges a fecskendő hossztengelyére (B), ahol a tartóeszközök (3) tartalmaznak egy üreges elemet (19), aminek a belsejébe beilleszthető a fecskendő (4) hengeres teste (4a) és egy eszközt az üreges elem (19) rögzítésére, ami mereven van hozzákapcsolva a fecskendő (4) hengeres testéhez (4a),

egy első eszközt (5), ami létrehozza az alternáló forgatást és tartalmaz egy tengelyt (15), ami a merőleges tengelyt (A) képezi, és úgy van megtámasztva, hogy elforgatható a tartószerkezeten (2), ahol egy első motor (17) csatlakozik a tengelyhez (15), és eszközt (18) a tartóeszközöknek (3) a tengelyhez (15) történő csatlakoztatására, és

egy második eszközt (6), ami működteti a fecskendő (4) dugattyújának (4b) mozgását, ami funkcionálisan együttműködik az első eszközzel (5) és tartalmaz egy kart (35) és egy rudat (36), ami a kar (35) egyik végéhez van erősítve és csatlakozhat a fecskendő (4) dugattyújához (4b),

azzal jellemezve, hogy tartalmaz egy elektronikus vezérlő és felügyelő egységet (CU), ami funkcionálisan van összekapcsolva az első és második eszközzel (5, 6) az első motor (17) működtetésére oly módon, hogy a tengely (15) alternáló forgását biztosítja a tengely (A) körül egy meghatározott szögben, és működteti a második eszközt (6), hogy elmozdítsa a második eszköz (6) rúdját (36) a dugattyútól, és leállítsa az első motort (17) és elindítsa a második eszközt (6) egy előre beállított idő elteltével.

2. Az 1. igénypont szerinti szivattyú, **azzal jellemezve,** hogy a merőleges tengely (A) egy lényegében vízszintes síkban fekszik.
3. Az 1. vagy 2. igénypont szerinti szivattyú, **azzal jellemezve,** hogy az alteráló forgás szöge kisebb, mint 2πrad.
4. Az előző igénypontok bármelyike szerinti szivattyú, **azzal jellemezve,** hogy tartalmaz eszközöket (7) egy járulékos fecskendő reteszelésére, ami kapcsolódik a tartószerkezethez (2), valamint egy harmadik eszközt (9) a járulékos fecskendő dugattyújának mozgatására.
5. Az előző igénypontok bármelyike szerinti szivattyú, **azzal jellemezve,** hogy tartalmaz egy első eszközt (10) a fecskendő (4) érzékelésére és/vagy egy második eszközt (11) a járulékos fecskendő (8) érzékelésére.
6. Az előző igénypontok bármelyike szerinti szivattyú, **azzal jellemezve,** hogy tartalmaz egy első eszközt (12) a fecskendő (4) dugattyú (4b) mozgásának vezérlésére.
7. A 4 – 6. igénypontok bármelyike szerinti szivattyú, **azzal jellemezve,** hogy tartalmaz egy második eszközt (13) a járulékos fecskendő (8) dugattyú (8b) mozgásának vezérlésére.
8. Az előző igénypontok bármelyike szerinti szivattyú, **azzal jellemezve,** hogy a második és harmadik eszközök (5, 6, 9) legalább egyike tartalmaz eszközt (14) a fecskendő (4) és a járulékos fecskendő (8) dugattyúira (4b, 8b) ható nyomás érzékelésére.

9. Az előző igénypontok bármelyike szerinti szivattyú, **azzal jellemezve,** hogy az elektronikus vezérlő és felügyelő egység (CU) funkcionálisan kapcsolódik legalább az első és második eszközök (5, 6, 9) legalább egyikével.

10. Az előző igénypontok bármelyike szerinti szivattyú, **azzal jellemezve,** hogy a tartóeszközök (3) tartalmaznak egy olyan részt (23), aminek alakos profilja (P) van és alkalmas egy olyan rúd (24) fejrészével (24a) való kapcsolódásra, ami axiálisan elcsúsztatbatóan van beillesztve - rugalmas elemek (25) közbeillesztésével – egy vezetékbe (26), ami a tengelyben (15) van kialakítva a tengely (15) befogó fészkénél (20) oly módon, hogy a fejrész (24a) benyúlik a fészekbe (20), ahol a kapcsolat a fejrész (24a) és az alakos rész (23) között alkalmas a tartóeszközöknek (3) a tengelyhez (15) történő rögzítésére.

11. Az 5 vagy 6 – 10. igénypontok bármelyike szerinti és az 5. igényponttól függő szivattyú, **azzal jellemezve,** hogy az első érzékelő eszköz (10) kapcsolatban van a tengellyel (15).

12. Az 5. igénypontól függő 10. igénypont vagy a 11. igénypont szerinti szivattyú, **azzal jellemezve,** hogy a rúdnak (24) a fejrésszel (24a) szemben fekvő vége (24b) kinyúlik a tengelyből (15), és az érzékelő eszköz (10) ehhez proximálisan van elrendezve, a rúd (24) pedig alkalmas az első érzékelő eszköz (10) működtetésére.

13. A 4 – 13. igénypontok bármelyike szerinti szivattyú, **azzal jellemezve,** hogy a második és harmadik eszközök (6, 9) legalább egyike tartalmaz egyenes vezetőelemet (28), ami mentén egy csúszka (30) mozoghat oda – vissza; egy csavart (31), ami lényegében párhuzamos az egyenes vezetőelemmel (28) és úgy van megtámasztva, hogy a tartószerkezet (2) el tudja forgatni és egy, a csúszkában (30) kialakított anyamenethez (33) kapcsolódik; egy második motorokat (34), amik a csavarhoz (31) kapcsolódnak; és egy dugattyút (36), ami mereven kapcsolódik a csúszkához (30) és alkalmas arra, hogy érintkezésbe lépjen a fecskendő (4) vagy a járulékos fecskendő (8) dugattyújával (4b, 8 b).

14. A 4 – 13. igénypontok bármelyike szerinti szivattyú, **azzal jellemezve,** hogy a reteszelő eszközök (7) tartalmaznak egy fészket (37, 38) a fecskendő (8) hengeres testének (8a) bevezető részénél kialakított szárnyak (3a) befogadására, valamint egy kapcsot (40) a hengeres test (8a) reteszelésére.