2 Sheets—Sheet 1.

L. KIRK.

BRICK PRESS.

No. 15,135. Patented June 17, 1856.

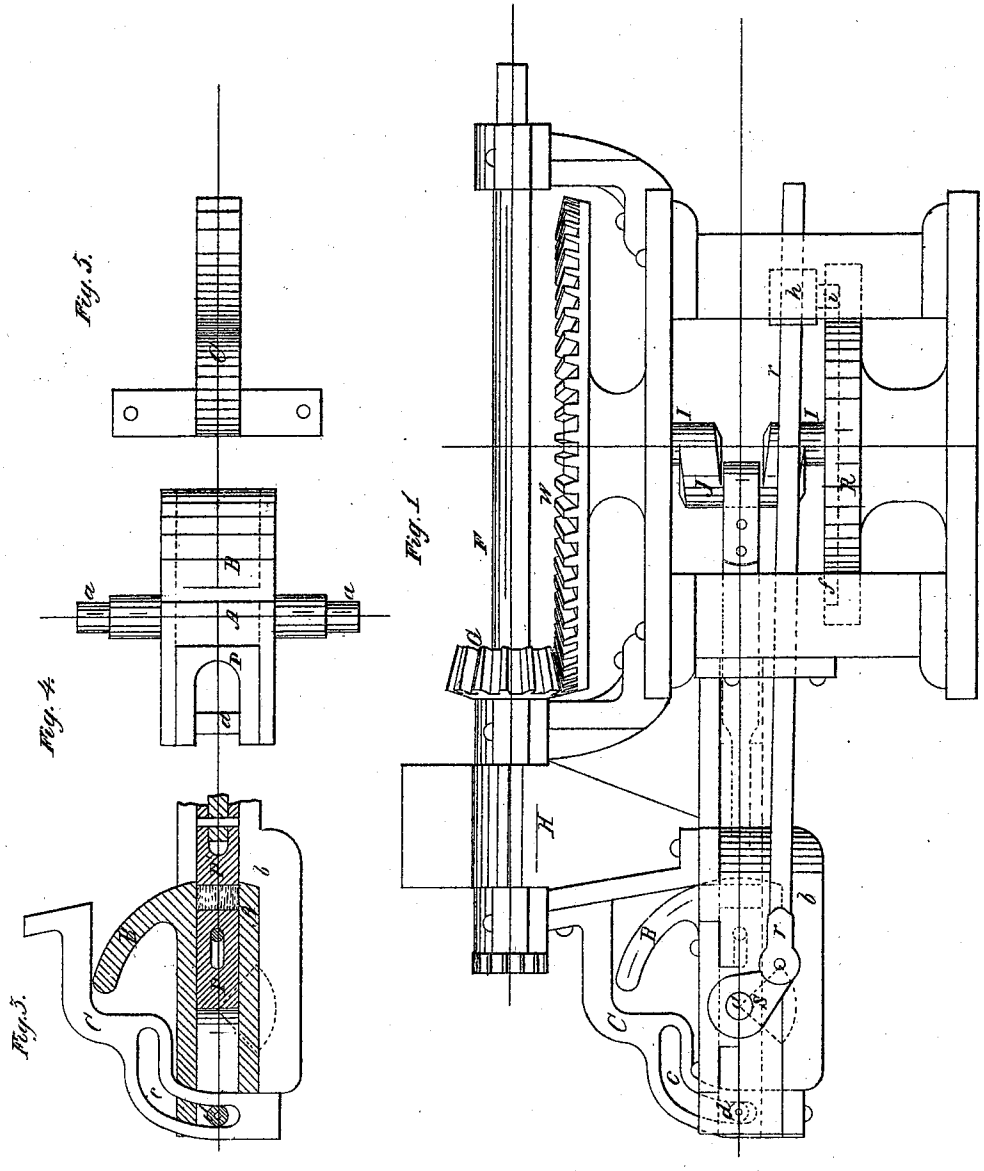

2 Sheets—Sheet 2.

L. KIRK.

BRICK PRESS.

No. 15,135. Patented June 17, 1856.

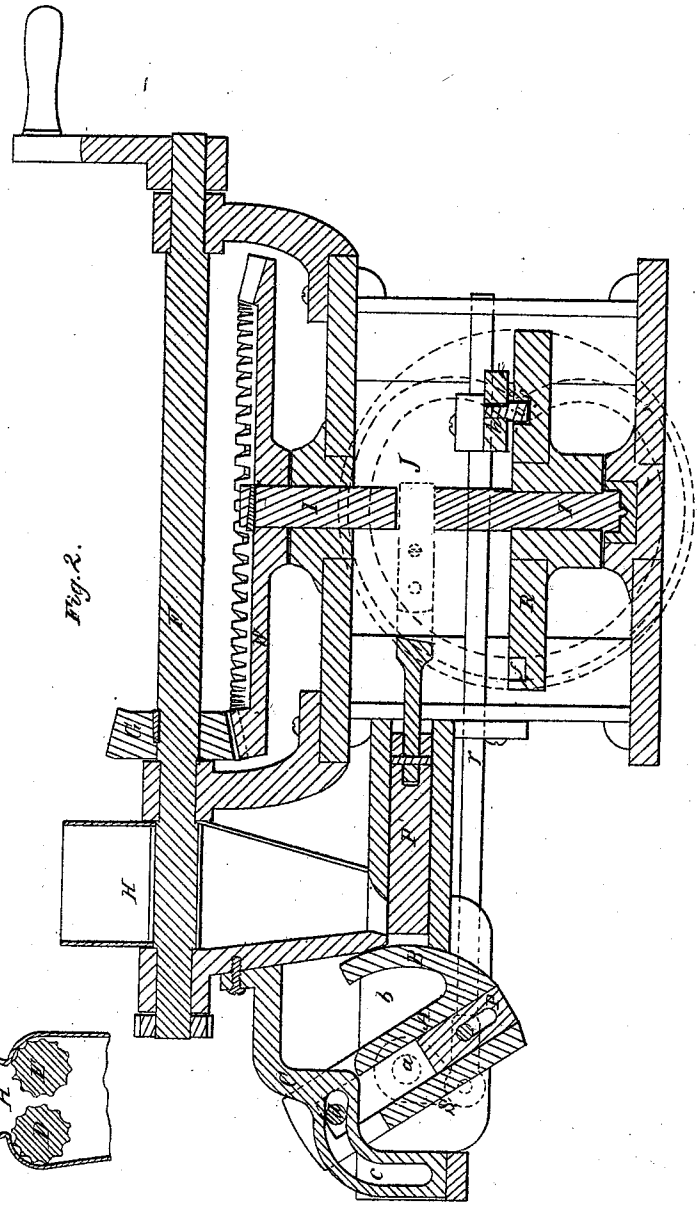

UNITED STATES PATENT OFFICE.

LEWIS KIRK, OF READING, PENNSYLVANIA.

BRICK-PRESS.

Specification of Letters Patent No. 15,135, dated June 17, 1856.

To all whom it may concern:

Be it known that I, LEWIS KIRK, of Reading, in the county of Berks and State of Pennsylvania, have invented a new and useful Improvement in Brick-Presses; and I do hereby declare that the following is a full, clear, and exact description of the same, reference being had to the annexed drawing, forming part of this specification, in which—

Figure 1 is a side elevation of the machine. Fig. 2 is a vertical longitudinal section of the same taken through axis of vertical shaft. Fig. 3 is a section, showing mold and piston, and adjacent parts, at the time of pressing the brick. Fig. 4 is a top view of mold box detached. Fig. 5 is a top view of curved piece, by whose slot the delivering piston is actuated. Fig. 6 is a vertical section of the hopper perpendicular to axes of rollers.

Similar letters of reference in the several figures denote the same part.

The nature of my invention consists in constructing the machine with an oscillating mold chamber, containing a piston reciprocated by the oscillations of the aforesaid chamber, so as to effect the discharge of the brick when the chamber has reached the lowest point of its travel, and retract sufficiently far, to form the back of the mold, when the mold chamber assumes its position in line with the direction of the compressing piston, the mold chamber having upon its front edge, a clay guard, concentric with the trunnions of the chamber, so as to prevent the passage of clay from the hopper during the downward travel of the mold chamber.

The details of construction and operation will be understood from the following description and reference to the drawing; in which the several parts of the machine are thus represented.

A is the mold chamber, supported between two cheeks *b*, by trunnions *a*. Upon the mold chamber is a clay guard B, whose convex surface is concentric with the trunnions *a*. Within the mold chamber is the piston P, connected in rear with the slot *c* of brace C, by the bar *d*. This slot is eccentric with respect to the motion of the mold chamber around its trunnion axis, and thereby causes the movement of piston P within the mold chamber. This eccentricity of slot *c* is so regulated that the piston shall move forward to the mouth of the mold chamber, as shown in Fig. 2, when the said chamber has reached the lowest position, and shall recede to the position shown in Fig. 3 when the mold chamber is at its highest point.

H is the hopper in which are the rollers D and E, (Fig. 6) for pulverizing the clay. These rollers are driven by the horizontal shaft F, to which the power is applied. On shaft F is a pinion G meshing with large cog wheel W on shaft I. This shaft has a crank J, to which is connected the compressing piston P′.

On the shaft I below the crank J is a cam wheel R, (the face of which is shown by red lines in Fig. 2). In groove *f* of this wheel is a pin *i* depending from a cross frame *h*. This frame has two rods *r* leading from it to cranks *s* on the trunnions *a*, of the mold chamber. The oscillations of the mold chamber are effected by this connection of the trunnion cranks with the grooves of wheel R.

The operation of this press is as follows: Dry clay is fed to the hopper and passes to the space in front of the compressing piston, which by the action of crank J, forces it against the head of piston P, at this time constituting the back of the mold, (as shown in Fig. 3). As the crank J withdraws piston P′ from the face of the molded brick, pin *i* is drawn by groove *f*, toward the axis of shaft I, forcing rods *r* toward the mold chamber, thereby moving cranks *s* and thus turning the trunnions *a* of the mold chamber. This turning of the trunnions carries the mold chamber into the position shown in Fig. 2. During this movement, bar *d* is forced to traverse the slot *c*, and is thus carried toward the axis of trunnions *a*, forcing piston P into position shown in Fig. 2, which discharges the brick. As the chamber A passes downward the clay guard B covers the opening below the hopper and prevents the issue of clay therefrom. By the continued rotation of the shaft I, the pin *i* is, after the passage of point *x*, carried from the axis of the shaft, causing the mold chamber to rise to the position shown in

Fig. 1. During this movement, slot *c* draws piston P backward, and the chamber is ready for molding another brick.

What I claim and desire to secure by Letters Patent, is—

The oscillating mold chamber, in combination with the clay guard, concentric with its trunnions, and the piston P, actuated by the oscillation of the mold chamber, when constructed arranged and operated in the manner and for the purpose set forth.

In testimony whereof, I have hereunto signed my name before two subscribing witnesses.

LEWIS KIRK.

Witnesses:
WM. B. SCHOENER,
PETER FILBUT.