W. P. JENNINGS.

JACQUARD MACHINERY.

No. 193,874. Patented Aug. 7, 1877.

Fig. 1.

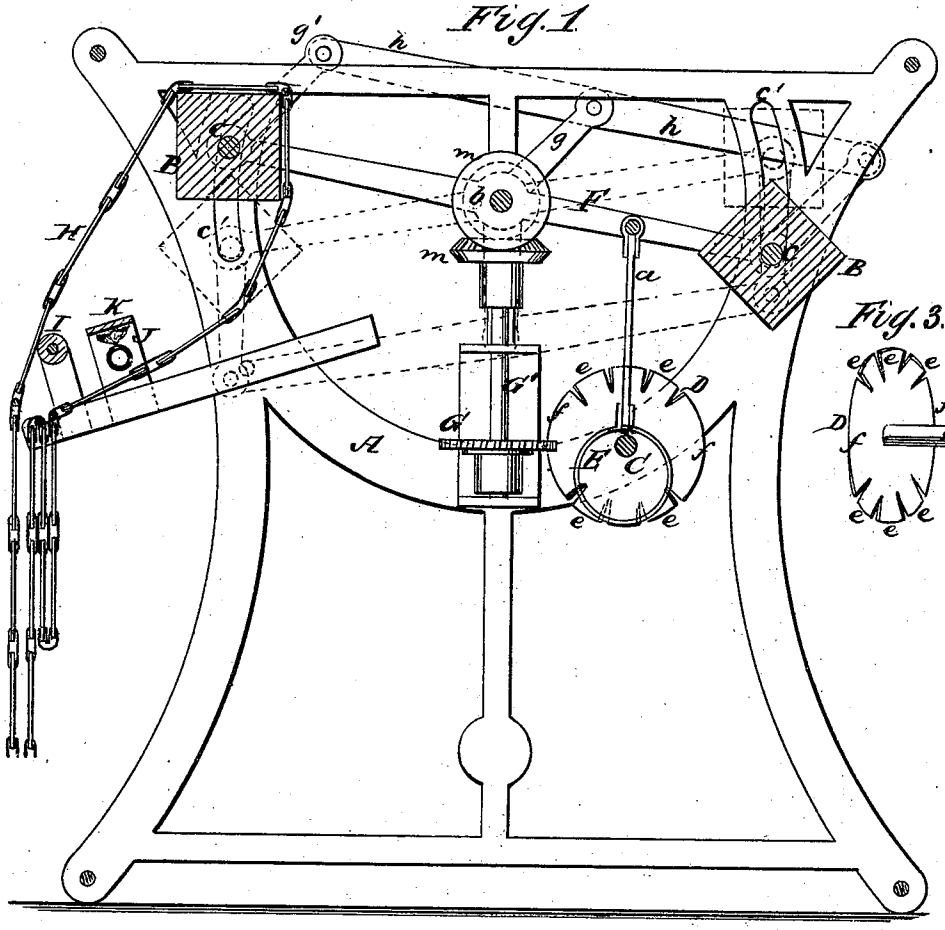

Fig. 3.

Fig. 2.

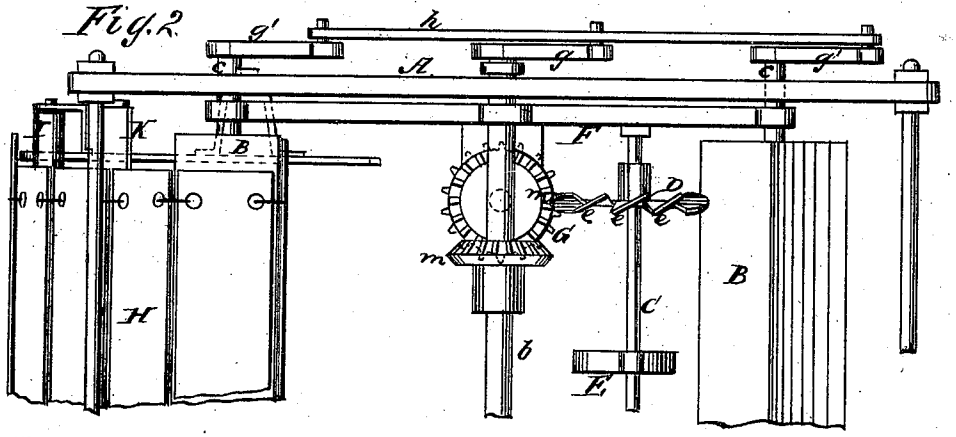

WITNESSES:

E. Wolff

J. P. Peabborough.

INVENTOR:

W. P. Jennings.

BY Munn & Co

ATTORNEYS

N. PETERS, PHOTO-LITHOGRAPHER, WASHINGTON, D. C.

UNITED STATES PATENT OFFICE.

WARREN P. JENNINGS, OF BROOKLYN, NEW YORK.

IMPROVEMENT IN JACQUARD MACHINERY.

Specification forming part of Letters Patent No. **193,874**, dated August 7, 1877; application filed May 12, 1877.

To all whom it may concern:

Be it known that I, WARREN P. JENNINGS, of Brooklyn, in the county of Kings and State of New York, have invented a new and Improved Jacquard, of which the following is a specification:

This invention has relation to Jacquard machinery; and the nature of my invention consists, first, in the employment of a cam-wheel of peculiar construction, in combination with gearing and rotating arms, hereinafter explained, for giving more positive intermittent rotation to a card-cylinder during its vertical movements; second, in combining a heater with the cards, which is so arranged that the latter are prevented from being injured by moisture in the air, as will be hereinafter explained.

In the annexed drawings, Figure 1 is a vertical section, showing one part of my invention applied to two card-carrying cylinders. Fig. 2 is a top view of the machine, part of which is broken away.

Similar letters of reference indicate corresponding parts.

I have represented my improved devices mounted in a frame, A, and arranged for operating two card-cylinders, B B; but in practice I contemplate using a single cylinder or any required number of them, as circumstances may require.

C designates a rotating shaft, on which is keyed a cam-wheel, D, and an eccentric, E.

The pitman-rod *a* of the eccentric gives a regular vibrating motion to levers F, which have their fulcra on a shaft, *b*. In the ends of these levers the shafts *c* of the cylinders B B are journaled, and extended through curved slots *c'*, made through the sides of frame A. The two cylinders B B will thus describe arcs of circles concentric to the axis of the shaft *b*.

The cam-wheel D is constructed with several narrow leaves, *e*, and two broad leaves, *f*, all of which are feathered, as shown in Figs. 2 and 3. This wheel engages with the teeth of a spur-wheel, G, on a vertical shaft, G', and gives intermittent movements thereto for a purpose hereinafter explained.

The upper end of shaft G' is geared to the shaft *b* by means of bevel spur-wheels *m m*, and on the outer ends of this shaft arms *g* are keyed, which are connected to similar arms *g'* on the shafts of cylinder B by means of rods *h*.

It will be seen from the above description that the cam-wheel D communicates a positive rotary motion to the card-cylinders, giving them one-eighth of a revolution at each stroke, and bringing them into proper position at the termination of every ascending stroke. The movements are so direct and timed that there will be no tendency to displace the cards on the cylinders while bringing them successively into position for operation.

The chain of cards H is constructed in the usual well-known manner, and near the guide-roller I, over which the cards pass, to the cylinder B, I arrange a heater, J, covered by a shield, K. This heater may be a perforated gas-pipe, where it is desired to use gas-jets, or a lamp or steam may be used where gas is not to be had. In damp weather cards absorb moisture and swell, so that they do not work true. To prevent this I arrange the heater so that the cards are kept dry.

Having thus described my invention, I claim as new and desire to secure by Letters Patent—

1. A rotary shaft having cam D, with narrow feathered leaves *e* and two broad feathered leaves, *f*, in combination with the spur-wheel G on a vertical shaft, G', bevel-wheels *m*, shaft *b*, arms *g g'*, rods *h*, and cylinders B, as and for the purpose specified.

2. In combination with the cards of a jacquard, a heater or drier, J, arranged substantially as described.

WARREN P. JENNINGS.

Witnesses:

C. SEDGWICK,

ALEX. F. ROBERTS.