(12) INTERNATIONAL APPLICATION PUBLISHED UNDER THE PATENT COOPERATION TREATY (PCT)

(19) World Intellectual Property Organization
International Bureau

(43) International Publication Date
30 November 2023 (30.11.2023)

WIPO | PCT

(10) International Publication Number
WO 2023/227880 A1

(51) International Patent Classification:
D21J 3/10 (2006.01) *D21J 7/00* (2006.01)

(21) International Application Number:
PCT/GB2023/051354

(22) International Filing Date:
24 May 2023 (24.05.2023)

(25) Filing Language: English

(26) Publication Language: English

(30) Priority Data:
2207773.9 26 May 2022 (26.05.2022) GB

(71) Applicant: **PULPEX LIMITED** [GB/GB]; 101 New Cavendish Street, 1st Floor South, London W1W 6XH (GB).

(72) Inventors: **PROZESKY, Daniel George**; c/o Pulpex Limited, Unit 1, Cambridge South, West Way, Dales Manor Business Park Sawston Cambridgeshire CB22 3FG (GB). **ASHCROFT, Theo Richard**; c/o Pulpex Limited, Unit 1, Cambridge South, West Way, Dales Manor Business Park Sawston Cambridgeshire CB22 3FG (GB). **TURNER, Adam Richard**; c/o Pulpex Limited, Unit 1, Cambridge South, West Way, Dales Manor Business Park Sawston Cambridgeshire CB22 3FG (GB).

(74) Agent: **EIP**; Fairfax House, 15 Fulwood Place, London Greater London WC1V 6HU (GB).

(81) Designated States *(unless otherwise indicated, for every kind of national protection available)*: AE, AG, AL, AM, AO, AT, AU, AZ, BA, BB, BG, BH, BN, BR, BW, BY, BZ, CA, CH, CL, CN, CO, CR, CU, CV, CZ, DE, DJ, DK, DM, DO, DZ, EC, EE, EG, ES, FI, GB, GD, GE, GH, GM, GT, HN, HR, HU, ID, IL, IN, IQ, IR, IS, IT, JM, JO, JP, KE, KG, KH, KN, KP, KR, KW, KZ, LA, LC, LK, LR, LS, LU, LY, MA, MD, MG, MK, MN, MU, MW, MX, MY, MZ, NA, NG, NI, NO, NZ, OM, PA, PE, PG, PH, PL, PT, QA, RO, RS, RU, RW, SA, SC, SD, SE, SG, SK, SL, ST, SV, SY, TH, TJ, TM, TN, TR, TT, TZ, UA, UG, US, UZ, VC, VN, WS, ZA, ZM, ZW.

(84) Designated States *(unless otherwise indicated, for every kind of regional protection available)*: ARIPO (BW, CV, GH, GM, KE, LR, LS, MW, MZ, NA, RW, SC, SD, SL, ST, SZ, TZ, UG, ZM, ZW), Eurasian (AM, AZ, BY, KG, KZ, RU, TJ, TM), European (AL, AT, BE, BG, CH, CY, CZ, DE, DK, EE, ES, FI, FR, GB, GR, HR, HU, IE, IS, IT, LT, LU, LV, MC, ME, MK, MT, NL, NO, PL, PT, RO, RS, SE, SI, SK, SM, TR), OAPI (BF, BJ, CF, CG, CI, CM, GA, GN, GQ, GW, KM, ML, MR, NE, SN, TD, TG).

(54) **Title:** MANDREL SYSTEM AND METHOD

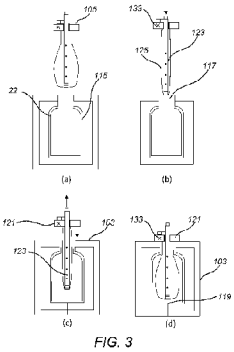

FIG. 3

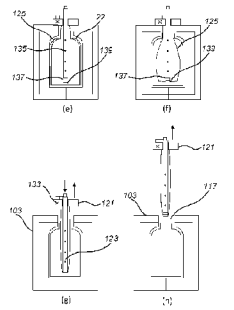

FIG. 3 (cont.)

(57) **Abstract:** A mandrel system for use with a mould to mould a receptacle is described. The mandrel system comprises a component, a mandrel, and an expandable member. The mandrel is at least partially located, or at least partially locatable, inside the expandable member and comprises one or more holes through which a fluid is flowable in use from an interior of the mandrel to an exterior of the mandrel to expand the expandable member. The expandable member is attached, or is attachable, to the component. When the expandable member is attached to the component and the mandrel is at least partially located inside the expandable member, an end of the mandrel is moveable relative to the component to vary a length of the expandable member and thereby to vary a width of the expandable member.

WO 2023/227880 A1

[Continued on next page]

Published:

— *with international search report (Art. 21(3))*

— *before the expiration of the time limit for amending the claims and to be republished in the event of receipt of amendments (Rule 48.2(h))*

MANDREL SYSTEM AND METHOD

TECHNICAL FIELD

The present invention relates to a mandrel system for use with a mould to mould a receptacle and a method of moulding a receptacle.

BACKGROUND

A mandrel system may be inserted into a mould in order for an expandable member of the mandrel system to be expanded to apply a forming operation to a receptacle, such as a bottle, located within the mould. In some examples, after the forming operation has been applied, the mandrel system may be withdrawn from the mould.

SUMMARY

According to a first aspect of the present invention, there is provided a mandrel system for use with a mould to mould a receptacle, the mandrel system comprising: a component; a mandrel; and an expandable member, wherein: the mandrel is at least partially located, or at least partially locatable, inside the expandable member and comprises one or more holes through which a fluid is flowable in use from an interior of the mandrel to an exterior of the mandrel to expand the expandable member; the expandable member is attached, or is attachable, to the component; and when the expandable member is attached to the component and the mandrel is at least partially located inside the expandable member, an end of the mandrel is moveable relative to the component to vary a length of the expandable member and thereby to vary a width of the expandable member. The expandable member may be considered an inflatable member or bladder. As a result, the width of the expandable member may be varied to best suit the requirements of a manufacturing process which employs the mandrel system. For example, reducing the width of the expandable member may be beneficial in facilitating passage of the expandable member through an opening of the mould which may occur when the mandrel system is inserted into, and subsequently withdrawn from, the mould. Reducing the width may enable the expandable member to pass through the opening

without contacting the mould and thereby damaging the expandable member. Additionally, in the case where a receptacle is located within the mould and the expandable member is inserted into the receptacle to apply a forming operation to the receptacle, reducing the width may reduce the likelihood of the expandable member contacting and damaging the receptacle during insertion and/or withdrawal. Increasing the width of the expandable member may be beneficial during expansion of the expandable member as the expandable member may be able to expand relatively uninhibited by the mandrel. Uninhibited expansion of the expandable member may improve the magnitude and uniformity of a pressure applied by the expandable member to the receptacle during the forming operation. Additionally, uninhibited expansion may reduce stress concentrations in the expandable member which may damage or fatigue the expandable member and thereby the longevity of the expandable member may be improved. Additionally, increasing the length of the expandable member may place the expandable member under tension which may reduce the amount of slack in the expandable member. Thereby, the expandable member may be less likely to contact and damage the receptacle during insertion and/or withdrawal. Optionally, the component comprises a connector for connecting the mandrel system to the mould. Optionally, the component is part of the mandrel. In some examples, the receptacle is a bottle, such as a fibre-based bottle. Optionally, the fluid is flowable in use through the holes from the exterior of the mandrel to the interior of the mandrel.

The expandable member may be attached, or may be attachable, to the end of the mandrel. As a result, improved control of the width of the expandable member may be achieved. Specifically, the end of the mandrel may move away from the component to increase the length of the expandable member which causes a corresponding decrease in the width of the expandable member. The end of the mandrel may then move towards the component to reduce the length of the expandable member which causes a corresponding increase in the width of the expandable member. Optionally, the end of the mandrel may be moveable relative to the component in response to expansion of the expandable member.

The expandable member may be detachably attached, or detachably attachable, to the end of the mandrel. As a result, the end of the mandrel may be attached or detached from the expandable member during different stages of a manufacturing process. For example, when attached to the mandrel, the expandable member may be more easily positioned and moved. This may be beneficial for positioning the expandable member within the mould prior to expansion, and/or during insertion or withdrawal of the mandrel system from the mould. When detached from the mandrel, the expandable member may expand uninhibited by the end of the mandrel, which might otherwise inhibit the expansion. Uninhibited expansion of the expandable member may improve the magnitude and uniformity of a pressure applied by the expandable member to a receptacle within the mould. Thereby, the quality of the receptacle may be improved due to improved compaction which may result from the improved magnitude and uniformity of the pressure applied. Additionally, uninhibited expansion may reduce stress concentrations in the expandable member which may damage or fatigue the expandable member. Thereby, the longevity of the expandable member may be improved.

The expandable member may be arranged to detach from the end of the mandrel in response to expansion of the expandable member. Thereby the expandable member may move freely relative to the end of the mandrel during expansion and thereby expand uninhibited by the end of the mandrel. As discussed above, uninhibited expansion of the expandable member may improve the magnitude and uniformity of the pressure applied by the expandable member to a receptacle within the mould. Additionally, uninhibited expansion may reduce stress concentrations in the expandable member which may damage or fatigue the expandable member. Thereby, the longevity of the expandable member may be improved.

The end of the mandrel may be rotatable relative to the component to twist the expandable member around the mandrel. By twisting the expandable member around the mandrel, a larger variation in the width of the expandable member may be achieved than would otherwise be possible without twisting the expandable member. This may enable the mandrel system to be used with a greater range of mould geometries. Specifically, some moulds may have relatively small openings but relatively wide mould cavities. In

these cases, a relatively wide expandable member would be required to sufficiently fill these mould cavities. However, the expandable member would also need to be sufficiently small to be inserted and withdrawn from the mould via the relatively small opening. By twisting the expandable member around the mandrel, the mandrel system may comprise a relatively wide expandable member, and the width of the expandable member may nevertheless be reduced to enable the expandable member to be inserted and withdrawn through the relatively small opening of the mould. Additionally, the inventors have identified that twisting and elongating the expandable member may result in the twists being more evenly distributed along the length of the expandable member which may result in a greater variation in width than either twisting or elongating alone provide.

The mandrel may have a cylindrical shape. By having a cylindrical shape, sharp edges along a length of the mandrel are omitted which may reduce the likelihood of the mandrel damaging the expandable member, for example by gouging a hole in the expandable member. Optionally, the end of the mandrel may be rounded. Thereby sharp edges at the end of the mandrel may be omitted.

The mandrel system may comprise a controller configured to cause movement of the end of the mandrel relative to the component. Thereby, an amount of operator input required to operate the mandrel system may be reduced compared to, for example, a mandrel system where the operator manually moves the end of the mandrel relative to the component. This may in turn improve overall product quality and consistency. Additionally, this may result in reduced processing times and increased throughput.

The end of the mandrel may be moveable relative to the component along a longitudinal axis; the end of the mandrel may be rotatable relative to the component about the longitudinal axis; and the controller may be configured to cause rotation of the end of the mandrel relative to the component about the longitudinal axis concurrently with causing movement of the end of the mandrel relative to the component along the longitudinal axis. As a result, the expandable member may be elongated as it is twisted. This may reduce the likelihood of the expandable member becoming damaged during

twisting and/or result in quicker contraction or expansion of the expandable member and thereby result in reduced processing times and increased throughput.

According to a second aspect of the present invention, there is provided a mould system for moulding a receptacle, the mould system comprising: a mould comprising a mould cavity and an opening; the mandrel system of the first aspect, wherein the mandrel system is insertable into the mould cavity via the opening and usable with the mould to mould the receptacle in the mould cavity. As noted above, the width of the expandable member may thereby be varied to facilitate passage of the expandable member through the opening of the mould. In some examples, the receptacle is a bottle, such as a fibre-based bottle.

The mandrel system may comprise a reference point; the mandrel system may be positionable relative to the mould such that the reference point is at a fixed position relative to the mould and the mandrel and the expandable member extend into the mould cavity through the opening such that there is a clearance between the expandable member and a base of the mould cavity opposite the opening; and the end of the mandrel and the expandable member may be moveable relative to the reference point to vary the clearance. As a result, the expandable member may be positioned appropriately relative to the base. If the expandable member is inappropriately positioned (for example, being located too far from the base) then, during expansion, the expandable member may contact an upper part of a receptacle within the mould cavity before the expandable member has filled a lower part of the receptacle. Further expansion of the expandable member in a downward direction may then be inhibited by friction between the expandable member and the upper part of the receptacle. Inhibited expansion may result in the expandable member not fully filling the lower part of the receptacle. This may lead to an incorrect pressure being applied to the lower part of the receptacle (for example, a base of the receptacle). Thereby, this part of the receptacle may be insufficiently compacted leading to a weakness in the receptacle and/or poor receptacle quality. Alternatively, inhibited expansion may result in the expandable member stretching excessively to fully fill the lower part of the receptacle. Excessive stretching may reduce the uniformity of the pressure applied by the expandable member to the receptacle. This reduction in uniformity may be detrimental to

the quality of the receptacle, for example, resulting in weaknesses or variable thickness in the receptacle. Additionally, excessive stretching may fatigue the expandable member, thereby reducing the longevity of the expandable member, or lead to rupturing of the expandable member. Having a moveable mandrel enables appropriate positioning of the expandable member within the mould cavity. As a result, the quality of receptacles manufactured in the mould system may be improved and/or the longevity of the expandable member may be improved.

The component of the mandrel system may comprise a connector for connecting the mandrel system to the mould, and the reference point may be comprised by the connector. The connector may provide a convenient way of positioning the mandrel system relative to the mould and fixing the reference point relative to the mould.

The end of the mandrel may be moveable relative to the component between a first position and a second position; and when the end of the mandrel is in the second position, the width of the expandable member may be no greater than a width of the opening. Thereby, the likelihood of the expandable member damaging the receptacle or the expandable member being damaged upon withdrawal from or insertion into the mould cavity is further reduced.

According to a third aspect of the present invention, there is provided a method of moulding a receptacle, the method comprising: providing a mould comprising a mould cavity and an opening; providing the mandrel system of the first aspect; when the expandable member is attached to the component and the mandrel is at least partially located inside the expandable member, moving the end of the mandrel relative to the component to vary the length of the expandable member and thereby to vary the width of the expandable member; and inserting the mandrel system into the mould cavity via the opening or withdrawing the mandrel system from the mould cavity via the opening. As a result, the width of the expandable member may be varied to best suit the requirements of a manufacturing process which employs the mandrel system. For example, reducing the width of the expandable member may be beneficial in facilitating passage of the expandable member through the opening of the mould which may occur when the

expandable member is inserted into, and subsequently withdrawn from, the mould cavity. Reducing the width may enable the expandable member to pass through the opening without contacting the mould and thereby damaging the expandable member. Additionally, in the case where a receptacle is located within the mould cavity and the expandable member is inserted into the receptacle to apply a forming operation to the receptacle, reducing the width may reduce the likelihood of the expandable member contacting and damaging the receptacle during insertion and/or withdrawal. Increasing the width of the expandable member may be beneficial during expansion of the expandable member as the expandable member may be able to expand relatively uninhibited by the mandrel. Uninhibited expansion of the expandable member may improve the magnitude and uniformity of a pressure applied by the expandable member to the receptacle during the forming operation. Additionally, uninhibited expansion may reduce stress concentrations in the expandable member which may damage or fatigue the expandable member and thereby the longevity of the expandable member may be improved. Additionally, increasing the length of the expandable member may place the expandable member under tension which may reduce the amount of slack in the expandable member. Thereby, the expandable member may be less likely to contact and damage the receptacle during insertion and/or withdrawal. Optionally the method may comprise expanding the expandable member to apply a forming operation to a receptacle located within the mould cavity. In some examples, the receptacle is a bottle, such as a fibre-based bottle.

The method may comprise at least one of: detaching the end of the mandrel from the expandable member after the inserting the mandrel system into the mould cavity via the opening, and attaching the end of the mandrel to the expandable member prior to the withdrawing the mandrel system from the mould cavity via the opening. As a result, the end of the mandrel may be attached or detached from the expandable member during different stages of a manufacturing process. For example, when attached to the mandrel, the expandable member may be more easily positioned and moved. This may be beneficial for positioning the expandable member within the mould prior to expansion, and/or during insertion or withdrawal of the expandable member from the mould cavity. When detached from the mandrel, the expandable member may expand uninhibited by

the end of the mandrel, which might otherwise inhibit the expansion. Uninhibited expansion of the expandable member may improve the magnitude and uniformity of a pressure applied by the expandable member to a receptacle within the mould cavity. Thereby, the quality of the receptacle may be improved due to improved compaction which may result from the improved magnitude and uniformity of the pressure applied. Additionally, uninhibited expansion may reduce stress concentrations in the expandable member which may damage or fatigue the expandable member. Thereby, the longevity of the expandable member may be improved.

The method may comprise: expanding the expandable member; and detaching the end of the mandrel from the expandable member during the expanding the expandable member. Thereby the expandable member may move freely relative to the end of the mandrel during expansion and thereby expand uninhibited by the end of the mandrel. As discussed above, uninhibited expansion of the expandable member may improve the magnitude and uniformity of the pressure applied by the expandable member to a receptacle within the mould cavity. Additionally, uninhibited expansion may reduce stress concentrations in the expandable member which may damage or fatigue the expandable member. Thereby, the longevity of the expandable member may be improved. Alternatively, the method may comprise expanding the expandable member to apply a forming operation to a receptacle located within the mould cavity, and moving the end of the mandrel relative to the component during expansion of the expandable member.

The method may comprise at least one of rotating the end of the mandrel relative to the component to twist the expandable member around the mandrel and rotating the end of the mandrel relative to the component to untwist the expandable member from around the mandrel. By twisting the expandable member around the mandrel, a larger variation in the width of the expandable member may be achieved than would otherwise be possible without twisting the expandable member. This may enable the mandrel system to be used with a greater range of mould geometries. Specifically, some moulds may have relatively small openings but relatively wide mould cavities. In these cases, a relatively wide expandable member would be required to sufficiently fill these mould cavities. However, the expandable member would also need to be sufficiently small to be

inserted and withdrawn from the mould via the relatively small opening. By twisting the expandable member around the mandrel, the mandrel system may comprise a relatively wide expandable member, and the width of the expandable member may nevertheless be reduced to enable the expandable member to be inserted and withdrawn through the relatively small opening of the mould. By untwisting the expandable member, the expandable member is free to expand uninhibited by being twisted around the mandrel. Additionally, the inventors have identified that twisting and elongating the expandable member may result in the twists being more evenly distributed along the length of the expandable member which may result in a greater variation in width than either twisting or elongating alone provide.

The rotating the end of the mandrel relative to the component may be concurrent with the moving the end of the mandrel relative to the component to vary the length of the expandable member. As a result, the expandable member may be elongated as it is twisted. This may reduce the likelihood of the expandable member becoming damage during twisting and/or result in quicker contraction or expansion of the expandable member.

The mandrel may have a cylindrical shape. By having a cylindrical shape, sharp edges along the length of the mandrel are omitted which may reduce the likelihood of the mandrel damaging the expandable member, for example by gouging a hole in the expandable member. Optionally, the end of the mandrel may be rounded. Thereby sharp edges at the end of the mandrel may be omitted.

The moving the end of the mandrel relative to the component may comprise moving the component relative to the mould whilst keeping the end of the mandrel stationary relative to the mould. As a result, in preparation for withdrawal of the expandable member from the mould cavity, the width of the expandable member may be reduced without requiring movement of the end of the mandrel relative to the mould. This may be beneficial, as it may enable the end of the mandrel to be located close to a base of the mould cavity, which may be desirable for appropriately positioning the expandable member within the mould cavity.

The mandrel system may comprise a reference point; and the method may comprise: moving the mandrel and the expandable member relative to the reference point to vary a clearance between the expandable member and a base of the mould cavity opposite the opening of the mould; and positioning the mandrel system relative to the mould such that the reference point is at a fixed position relative to the mould, and the mandrel and the expandable member extend into the mould cavity through the opening. As a result, the expandable member may be positioned appropriately relative to the base. If the expandable member is inappropriately positioned (for example, being located too far from the base) then, during expansion, the expandable member may contact an upper part of a receptacle within the mould cavity before the expandable member has filled a lower part of the receptacle. Further expansion of the expandable member in a downward direction may then be inhibited by friction between the expandable member and the upper part of the receptacle. Inhibited expansion may result in the expandable member not fully filling the lower part of the receptacle. This may lead to an incorrect pressure being applied to the lower part of the receptacle (for example, a base of the receptacle). Thereby, this part of the receptacle may be insufficiently compacted leading to a weakness in the receptacle. Alternatively, inhibited expansion may result in the expandable member stretching excessively to fully fill the lower part of the receptacle. Excessive stretching may reduce the uniformity of the pressure applied by the expandable member to the receptacle. This reduction in uniformity may be detrimental to the quality of the receptacle, for example, resulting in weaknesses or variable thickness in the receptacle. Additionally, excessive stretching may fatigue the expandable member, thereby reducing the longevity of the expandable member, or lead to rupturing of the expandable member. Optionally, the component of the mandrel system comprises a connector, the connector comprises the reference point, and positioning the mandrel system comprises connecting the connector to the mould. The connector may provide a convenient way of positioning the mandrel system relative to the mould and fixing the reference point relative to the mould.

The moving the end of the mandrel relative to the component may comprise moving the end of the mandrel between a first position and a second position relative to

the component; and when the end of the mandrel is in the second position, the width of the expandable member may be no greater than a width of the opening. Thereby, the likelihood of the expandable member damaging the receptacle or the expandable member being damaged upon withdrawal from the mould cavity is further reduced.

The method may comprise: providing a receptacle within the mould cavity, the receptacle being formed, at least partially, of paper pulp; inserting the mandrel system into the receptacle; and expanding the expandable member as part of a forming operation to the receptacle. The choice of paper is ecologically more friendly than plastic. However, in being formed of paper pulp, the receptacle is particularly susceptible to being damaged by the expandable member when the expandable member is inserted or withdrawn from the receptacle. By varying the width of the expandable member, the width of the expandable member may be reduced to reduce the likelihood of the expandable member contacting and damaging the receptacle during insertion and/or withdrawal. Optionally, the forming operation comprises thermoforming. In some examples, the receptacle is a bottle, such as a fibre bottle.

According to a fourth aspect of the present invention, there is provided a receptacle obtainable or obtained from a fabrication method comprising the method of the third aspect of the invention. The receptacle may be a bottle, such as a fibre-based bottle. The fabrication method may comprise at least one additional process. The at least one additional process may comprise coating the receptacle to produce a coated receptacle. The at least one additional process may comprise drying the receptacle or the coated receptacle to produce a dried receptacle. The at least one additional process may comprise applying a closure to the receptacle, the coated receptacle or the dried receptacle.

BRIEF DESCRIPTION OF DRAWINGS

Embodiments of the invention will now be described, by way of example only, with reference to the accompanying drawings, in which:

Figure 1 shows a schematic view of an example process for making bottles from paper pulp;

Figure 2 shows a simplified section view of an example mould system;

Figure 3 shows, by way of simplified sections, different stages in the insertion and withdrawal of a mandrel system from a mould of the mould system, wherein (a) the mandrel system is located outside the mould; (b) a mandrel is moved relative to a connector to decrease the width of an expandable member of the mandrel system; (c) the mandrel system is inserted into the mould; (d) the mandrel system extends into the mould; (e) the expandable member is expanded to apply a forming operation to a receptacle located within the mould; (f) the expandable member is collapsed; (g) the connector and mandrel are moved to reduce the width of the expandable member; and (h) the mandrel system is withdrawn from the mould;

Figure 4 is a simplified section view of the mould and a further mould of the mould system with the mandrel system extending into each mould;

Figure 5 shows a simplified section view of an alternative example mandrel system;

Figure 6 shows, by way of simplified sections, different stages in the insertion and withdrawal of the alternative example mandrel system from the mould, wherein (a) the alternative example mandrel system is located outside the mould; (b) a mandrel is moved relative to a connector to decrease the width of an expandable member of the alternative example mandrel system; (c) the alternative example mandrel system is inserted into the mould; (d) the alternative example mandrel system extends into the mould; (e) the expandable member is expanded to apply a forming operation to a receptacle located within the mould; (f) the expandable member is collapsed; (g) the connector and mandrel are moved to reduce the width of the expandable member; and (h) the alternative example mandrel system is withdrawn from the mould;

Figure 7 shows a simplified section view of a further example mandrel system; and

Figure 8 shows, by way of simplified sections, different stages in the insertion and withdrawal of the further example mandrel system from the mould, wherein (a) the further example mandrel system is located outside the mould; (b) a mandrel is moved relative to a connector to decrease the width of an expandable member of the further example mandrel system; (c) the further example mandrel system is inserted into the mould; (d) the further example mandrel system extends into the mould; (e) the expandable member is expanded to apply a forming operation to a receptacle located within the mould; (f) the expandable member is collapsed; (g) the connector and mandrel are moved to reduce the width of the expandable member; and (h) the further example mandrel system is withdrawn from the mould.

DETAILED DESCRIPTION

The following description presents exemplary embodiments and, together with the drawings, serves to explain principles of embodiments of the invention.

Figure 1 shows a process for making bottles from paper pulp (i.e., which can form the basis of an example fibre suspension). The process is merely exemplary and is provided to give context to examples of the present invention. Broadly speaking, the exemplary process comprises providing a fibre suspension, introducing the fibre suspension into a mould cavity of a porous first mould and using the porous first mould to expel a liquid (such as water) from the fibre suspension to produce a wet precursor or embryo (which may itself be considered a moulded receptacle), further moulding the wet precursor in a mould to produce a further-moulded receptacle, coating the further-moulded receptacle to produce a coated moulded receptacle, drying the coated moulded receptacle to produce a dried receptacle, and applying a closure to the dried receptacle. As will be apparent at least from the following description, modifications may be made to the exemplary process to provide variants thereof in which other examples of the present invention may be embodied.

In this example, providing the fibre suspension comprises preparing the fibre suspension from ingredients thereof. More specifically, the preparing comprises providing pulp fibres, such as paper pulp fibres, and mixing the pulp fibres with a liquid to provide hydrated pulp fibres. In this example, the pulp fibres are provided in sheet form from a supplier and the liquid comprises water and one or more additives. In this example, the liquid is mixed with the pulp fibres to provide hydrated pulp fibres having a solid fibres content of 1wt% to 5wt% (by dry mass of fibres). In examples, the one or more additives includes a shorting agent, such as alkylketene dimer (AKD). The hydrated pulp fibres typically comprise AKD in an amount of 0.4wt% with respect to the total dry mass of the solid fibres in the hydrated pulp fibres. In some examples, one or more additives are present in the liquid at the point of mixing the pulp fibres with the liquid In some examples, one or more additives are included in the hydrated pulp fibres after mixing the pulp fibres with the liquid (e.g. the pulp fibres are hydrated for a period of time, such as from 2 to 16 hours, and then one or more additives are supplied to the hydrated pulp fibres). The hydrated pulp fibres are passed between plates of a valley beater 11 or refiner that are in motion relative to each other. This fibrillates some, or all, of the fibres, meaning that cell walls of those fibres are caused to become partially delaminated so that wetted surfaces of those fibres comprise protruding hairs or fibrillations. These fibrillations will help to increase a strength of bonds between the fibres in the dried end product. In other examples, the valley beater 11 or refiner may be omitted.

The resultant processed pulp is stored in a vat 12 in a relatively concentrated form (e.g. a solid fibres content of 1wt% to 5wt%) to reduce a required storage space. At an appropriate time, the processed pulp is transferred to a mixing station 13 at which the processed pulp is diluted in further water and, optionally, mixed with one or more additives (as well as, or in place of, the one or more additives provided with the hydrated pulp fibres) to provide the fibre suspension ready for moulding.

In this example, the porous first mould 15 comprises two half-moulds that are movable towards and away from each other, in this case using a hydraulic ram. In this example, each of the half-moulds is a monolithic or unitary tool formed by additive manufacturing (e.g. 3D-printing) that defines a mould profile, and, when the half-moulds

are brought into contact with each other, their respective mould profiles cooperate to define the mould cavity in which the wet precursor or moulded receptacle is to be formed. Each half-mould may itself define a smaller moulding cavity and, when brought into cooperation with a second half-mould, the smaller moulding cavities may combine to provide the overall mould cavity. The two half-moulds may themselves be considered "splits" or "moulds" and the overall porous first mould 15 may be considered a "split-mould" or, again, a "mould". In other examples, the porous first mould 15 may comprise more than two splits, such as three, four or six splits, that cooperate to define the moulding cavity.

In Figure 1, the fibre suspension (also known as slurry) is top-filled into the porous mould 15, in contrast to moulding processes that dip a mould in slurry. The fibre suspension is drawn under vacuum via a line 16 and into the porous mould 15, with excess suspending liquid being drawn through the porous mould 15 under vacuum via a line 18 into a tank 17. Shot mass may be controlled by measuring (e.g., weighing) the amount of liquid drawn into the tank 17. A weight scale platform supporting the tank 17 is visible in Figure 1. Once a required amount (e.g. a predetermined volume, such as 10 litres, or a predetermined mass, such as 10 kilograms) of liquid has been collected in the tank 17, suction of the suspending liquid through the porous mould 15 is stopped and the porous mould 15 is opened to ambient air. In this example, the suspending liquid drawn with the fibre suspension in line 16 is water, or predominantly water (as additives may also be present). The liquid drawn under vacuum via the line 18 and into the tank 17 is substantially free of fibres, since these are left behind against the walls of the porous mould 15 to form an embryo of the moulded receptacle.

In one form, in order to remove further suspending liquid (e.g. water) from the embryo, and form or consolidate the three-dimensional shape of the receptacle, an impermeable inflation element 19, e.g., a collapsible bladder, is inserted into the porous mould 15 and expanded to act as an internal high-pressure core structure for the porous mould 15. This process strengthens the wet embryo so that it can be handled, and displaces water from in between the fibres, thereby increasing the efficiency of a subsequent drying process. The inflation element 19 is actuated and regulated using a hydraulic pump 20. The pump 20 has a cylinder that displaces a fluid in a line 21 into the

inflation element 19, to expand the inflation element 19 radially and into conformity with the mould cavity. Fluid within the line 21 is preferably non-compressible, such as water. Water also has the advantage over other non-compressible liquids that any leaking or bursting of the bladder 19 will not introduce a new substance to the system (since the suspending liquid is already water, or predominantly water).

Demoulding occurs when the porous mould 15 opens for removal of the self-supporting moulded receptacle 22. Mould cleaning 23 is preferably performed subsequently, to remove small fibres and maintain a porosity of the porous mould 15. In this example, a radially firing high-pressure jet is inserted into the mould cavity while the mould 15 is open. This dislodges fibres from the wall of the mould cavity. Alternatively, or in addition, water from the tank 17 is pressurised through the back of the porous mould 15 to dislodge entrapped fibres. Water is drained for recycling back to an upstream part of the system. It is noteworthy that cleaning is important for conditioning the porous mould 15 for re-use. The porous mould 15 may appear visibly clean after removal of the receptacle, but its performance could be compromised without cleaning.

According to Figure 1, the formed but unfinished receptacle 22 is subsequently transported to a second moulding station where, in a, e.g., aluminium, mould 25, pressure and heat are applied for thermoforming a desired neck and surface finish, optionally including embossed and/or debossed surface features. After two halves of the mould 25 have closed around the receptacle 22, a pressuriser is engaged. For example, a bladder 26 (e.g., a thermoforming bladder 26) is inserted into the receptacle 22. The bladder 26 is inflated via a line 27 by a pump 28 to supply pressurised fluid, e.g., air, water, or oil. Optionally, during supply, the pressurised fluid is heated with e.g. a heater or, alternatively, is cooled with e.g. a heat exchanger. An external mould block 24 of the mould 25, and/or the mould 25 itself, may also, or alternatively, be heated. A state of the moulded receptacle 22 after thermoforming is considerably more rigid, with more compressed side walls, compared with the state at demoulding from the porous mould 15.

A drying stage 29 (e.g. a microwave drying process or other drying process) is performed downstream of the thermoforming, as shown. In one example, the drying stage 29 is performed before thermoforming. However, moulding in the mould 25 requires

some water content to assist with bonding during the compression process. Figure 1 illustrates a further drying stage 30 after the drying stage 29, which may utilise hot air circulated onto the moulded receptacle 22, e.g., in a "hot box". In some examples, microwave or other drying processes may be performed at plural stages of the overall manufacturing process.

The moulded receptacle 22 is then subjected to a coating stage during which, in this example, a spray lance 31 is inserted into the moulded receptacle 22 and applies one or more surface coatings to internal walls of the moulded receptacle 22. In another example, the moulded receptacle 22 is instead filled with a liquid that coats the internal walls of the moulded receptacle 22. In practice, such coatings provide a protective layer to prevent egress of contents into the bottle wall, which may permeate and/or weaken it. Coatings will be selected dependent on the intended contents of receptacle 22, e.g., a beverage, detergent, pharmaceutical product, etc. In some examples, the further drying stage 30 is performed after the coating stage (or both before and after the coating stage). In this example, the moulded receptacle 22 is then subjected to a curing process 34, which can be configured or optimised dependent on the coating, e.g., drying for twenty-four hours at ambient conditions or by a flash drying method. In some examples, e.g. where the further drying stage 30 occurs after the coating stage, the curing process 34 may be omitted.

At an appropriate stage of production (e.g., during thermoforming, or before or after coating) a closure or mouth forming process may be performed on the moulded receptacle 22. For example, as shown in Figure 1, a neck fitment 35 may be affixed. In some examples, an exterior coating is applied to the moulded receptacle 22, as shown in the further coating stage 32. In one example, the moulded receptacle 22 is dipped into a liquid that coats its outer surface, as shown in Figure 1. One or more further drying or curing processes may then be performed. For example, the moulded receptacle 22 may be allowed to dry in warm air. The moulded receptacle 22 may therefore be fully formed and ready to accept contents therein.

Figure 2 shows a mould system 101 which may be used to thermoform the self-supporting moulded receptacle 22 discussed above. The mould system 101 comprises a mould 103, a mandrel system 105, a pump 107 and a line 109.

The mould 103 comprises a first part 111 and a second part 113. In other examples, the mould 103 may comprise more than two parts. The two parts 111,113 are separable so as to open the mould 103. Each part comprises a cavity. When the two parts 111,113 are brought together to close the mould 103, a mould cavity 115 is created within the mould 103 that comprises the cavities of the first part 111 and the second part 113. In this particular example, the mould cavity 115 has the shape of a bottle and comprises a main body portion and a neck portion. The neck portion has a smaller diameter than the body portion and extends to the top of the mould 103. The mould 103 comprises an opening 117 to the mould cavity 115. Additionally, the mould cavity 115 comprises a base 119 opposite the opening 117. The base 119 is at a fixed distance from the opening 117, i.e., the base 119 does not move relative to the opening 117. This may provide a relatively robust and cheap mould compared to a mould with a base that is moveable relative to the opening.

The mandrel system 105 comprises a connector 121, a mandrel 123, an expandable member 125, a first actuator 127, a second actuator 129, a controller 131 and a control panel (not shown).

The connector 121 comprises a bore 122 that extends through the connector 121 from a top to a bottom of the connector 121. An annular seal is located within the bore 122 and provides a seal between the connector 121 and the mandrel 123, which extends through the bore 122. The seal is a low-friction seal and permits movement of the mandrel 123 relative to the connector 121. In this example, the connector 121 comprises a reference point 133. As described below in more detail, the mandrel 123 moves relative to the reference point 133 when inserting and withdrawing the mandrel 123 and expandable member 125 from the mould 102. In other examples, the reference point 133 may be comprised by other components of the mandrel system 105.

The mandrel 123 comprises a cylindrical tube 134 and a first part 137 of an attachment mechanism of the mandrel system 105. A plurality of holes 135 are formed along the length of the tube 134. The holes 135 are located along a lower portion of the tube 134 and extend radially through the tube 134 to allow fluid to flow from the interior of the mandrel 123 to the exterior of the mandrel 123. The first part 137 of the attachment mechanism comprises a magnet which is located at a lower end of the mandrel 123, i.e., the end of the mandrel 123 located within the expandable member 125. The mandrel 123 extends through the bore 122 in the connector 121 and into the expandable member 125 such that a lower portion of the mandrel 123 is located within the expandable member 125. In some examples, the mandrel 123 may be fully located inside the expandable member 125 and a different connector 121 may be used. The upper portion of the mandrel 123 is connected to the line 109. The mandrel 123 is free to move relative to the connector 121 and thus relative to the reference point 133. In particular, the mandrel 123 is free to move up and down within the bore 122, and to rotate within the bore 122 in the connector 121.

The expandable member 125 comprises an inflatable member in the form of an elastomeric bladder 138. The bladder 138 comprises a neck portion and a body portion. The neck portion is sealingly connected to the bottom of the connector 121. The neck portion has a smaller diameter than the body portion. In other examples, the bladder 138 may comprise a single portion of constant diameter. A second part 139 of the attachment mechanism comprises a metallic plate 139 formed of a ferromagnetic metal, such as iron. The metallic plate 139 is attached to the bottom of the bladder 138. The metallic plate 139 cooperates with the magnet 137 of the mandrel 123 to detachably attach the expandable member 125 to the mandrel 123.

The first actuator 127 is located on the connector 121 and is coupled to the mandrel 123. Operation of the first actuator 127 causes the mandrel 123 to move linearly, relative to the reference point 133, along the longitudinal axis of the mandrel 123. In this example, the first actuator 127 comprises an electric motor and a transmission (e.g., gears, friction wheel, and/or rack and pinion) for transmitting torque generated by the electric motor to the mandrel 123. In other examples, the first actuator 127 may comprise a

hydraulic or pneumatic system for moving the mandrel 123 relative to the reference point 133.

The second actuator 129 is located at a top end of the mandrel 123 and is coupled to the mandrel 123. Operation of the second actuator 129 causes the mandrel 123 to rotate, relative to the reference point 133, about the longitudinal axis of the mandrel 123. In this example, the second actuator 129 comprises an electric motor and a transmission (e.g., gears, friction wheel, and/or rack and pinion) for transmitting torque generated by the electric motor to the mandrel 123. In other examples, the second actuator 129 may comprise a hydraulic or pneumatic system for rotating the mandrel 123 relative to the reference point 133.

In this example, the mandrel system 105 comprises separate actuators 127, 129 for moving the mandrel 123 linearly and for rotating the mandrel 123. This then provides improved control over the linear and rotational movement of the mandrel 123, as well as enabling independent control over the rotation and linear movement. In other examples, the mandrel system 105 may comprise a single actuator that is operable to cause the mandrel 123 to move linearly and rotate simultaneously. In further examples, the actuator may comprise a single electric motor and one or more of the transmissions may be clutched. In this way, the benefits of independent control over linear and rotational movement of the mandrel may be achieved using a single electric motor. The controller 131 controls the operation of the actuators 127,129 and thereby the movement of the mandrel 123 relative to the reference point 133. The controller 131 also controls a robotic arm (not shown), which moves the connector 121 relative to the mould 103, and the pump 107.

The control panel (not shown) is connected to the controller 131 and is for receiving instructions and data relating to the mould 103 and the expandable member 125.

The pump 107 comprises a cylinder which displaces a fluid in the line 109. In some examples, the fluid is one of air, water, or oil. As the line 109 is connected to the top of the mandrel 123, displacing the fluid causes the pump 107 to supply a pressurised fluid to the interior of the mandrel 123. The pressurised fluid then flows through the holes

135 in the tube 134 and into the expandable member 125. Thereby, the pump 107 is used to expand the expandable member 125. The pump 107 is also capable of operating in the opposite direction to withdraw the fluid from the expandable member 125 and thereby collapse and contract the expandable member 125.

Use of the mould system 101 will now be provided by way of Figure 3. As shown in Figure 3(a), the two parts 111,113 of the mould 103 are closed around a receptacle 22 such that the receptacle 22 is located inside the mould cavity 115. At this stage, the mandrel system 105 is located outside of the mould cavity 115. The magnet 137 is attached to the magnetic plate 139 which attaches the expandable member 125 to the end of the mandrel 123.

Turning now to Figure 3(b), the controller 131 controls the first actuator 127 to move the mandrel 123 down relative to the reference point 133. As the mandrel 123 moves down, the end of the mandrel 123 forces the bottom of the expandable member 125 down, which increases the length of the expandable member 125. This increase in length of the expandable member 125 results in a corresponding reduction in the width of the expandable member 125. Concurrently, the controller 131 operates the second actuator 129 to rotate the mandrel 123 relative to the reference point 133. Due to the expandable member 125 being attached to the end of the mandrel 123 by the attachment mechanism (i.e., magnet 137 and metallic plate 139), the rotation causes the expandable member 125 to twist around the mandrel 123. By twisting and elongating the expandable member 125, a greater reduction in the width of the expandable member 125 can be achieved than twisting or elongating alone.

The controller 131 then controls the actuators 127,129 to halt the downward motion and rotation of the mandrel 123. At this stage, the width of the expandable member 125 is no greater than the width of the opening 117 of the mould 103. Thereby, the mandrel 123 and expandable member 125 may pass through the opening 117 of the mould 103 without the expandable member 125 contacting the mould 103 or the receptacle 22. Beneficially, this may reduce the likelihood of the receptacle 22 being damaged by the expandable member 125 and the expandable member 125 being damaged by the mould 103.

Turning now to Figure 3(c), the controller 131 then controls the robotic arm to move the connector 121 down and towards the mould 103 until the connector 121 contacts and connects with the top of the mould 103 (which is shown in Figure 3(d)). As the connector 121 moves down, the mandrel 123 and the expandable member 125 are inserted into the mould cavity 115 through the opening 117. Due to the previous downward motion of the mandrel 123 relative to the connector 121 (discussed with reference to Figure 3(b)), the length of the mandrel 123 is too great to fit within the mould cavity 115. Therefore, once a predetermined length of the mandrel 123 has been inserted into the mould cavity 115, the controller 131 operates the first actuator 127 to move the mandrel 123 up relative to the connector 121. This upward movement of the mandrel 123 occurs at the same time, and at the same rate of travel, as the connector 121 is moved down towards the mould 103. As a result, the position of the mandrel 123 within the mould appears stationary. The upward movement of the mandrel 123 relative to the connector 121 causes the length of the expandable member 125 to decrease and the width of the expandable member 125 to increase.

When the connector 121 contacts and connects to the top of the mould 103, the controller 131 controls the robotic arm to halt the downward movement of the connector 121. Additionally, the controller 131 controls the first actuator 127 to halt the upwards movement of the mandrel 123 relative to the connector 121. As shown in Figure 3(d), with the connector 121 connected to the top of the mould 103, the reference point 133 is at a fixed position relative to the mould 103. At this stage a clearance between the base 119 of the mould cavity 115 and the bottom of the expandable member 125 is dictated by the length of mandrel 123 which extends beneath the connector 121. The clearance is the minimum separation distance between the base 119 of the mould cavity and the expandable member 125 when the reference point 133 is at the fixed position relative to the mould 103. By varying the length of mandrel 123 which extends beneath the connector 121, the controller 131 can vary the clearance. The controller 131 controls the first actuator 127 (and therefore the length of mandrel 123 that extends beneath the connector 121) such that the clearance has a predetermined value. The bottom of the expandable member 125 may therefore be positioned appropriately relative to the base 119. This is discussed below in more detail.

The controller 131 then operates the second actuator 129 to rotate the mandrel 123 relative to the reference point 133 to untwist the expandable member 125 from around the mandrel 123. This then causes the width of the expandable member 125 to further increase.

With the expandable member 125 now positioned within the mould cavity 115, a forming operation is performed on the receptacle 22 (Figure 3(e)). The controller 131 controls the pump 107 to supply the pressurised fluid to the mandrel 123 which flows through the holes 135 in the mandrel 123 and into the expandable member 125 to expand the expandable member 125. The expansion of the expandable member 125 applies a force to the bottom of the expandable member 125 which overcomes the magnetic attraction between the magnet 137 and metallic plate 139, thereby causing the expandable member 125 to detach from the end of the mandrel 123. The expandable member 125 continues to expand within the receptacle. With sufficient expansion, the expandable member 125 contacts and compresses the receptacle 22 against the mould 103 to form the receptacle 22.

Turning now to Figure 3(f), once the forming operation is complete, the controller 131 controls the pump 107 to withdraw the pressurised fluid from the expandable member 125, which causes the expandable member 125 to collapse and contract. As the expandable member 125 contracts, the attraction between the magnet 137 and metallic plate 139 is sufficient to reattach the expandable member 125 to the end of the mandrel 123.

The controller 131 then controls the robotic arm to move the connector 121 upwards relative to the mould 103 (Figure 3(g)). Concurrently, the controller 131 controls the first actuator 127 to move the mandrel 123 downwards relative to the reference point 133 at the same rate that the connector 121 is moved upwards, such that the end of the mandrel 123 is stationary relative to the mould 103. Thereby, the length of the expandable member 125 is increased which results in the width of the expandable member 125 being decreased. The controller 131 also controls the second actuator 129 to rotate the mandrel 123 relative to the reference point 133 such that the expandable member 125 is twisted around the mandrel 123 to further decrease the width of the expandable member 125.

With the expandable member 125 elongated and twisted around the mandrel 123, the controller 131 controls the actuators 127,129 to halt movement of the mandrel 123 relative to the reference point 133.

Turning now to Figure 3(h), the controller 131 controls the robotic arm to move the connector 121 upwards relative to the mould 103 to withdraw the mandrel 123 and expandable member 125 from the mould 103 via the opening 117. Once the mandrel 123 and expandable member 125 are withdrawn from the mould 103, the mould 103 is opened by separating the two parts 111,113 and the receptacle 22 removed for further processing. For example, the receptacle 22 may be dried in a drying stage 29, as described above with reference to Figure 1.

By moving the mandrel 123 and expandable member 125 relative to the reference point 133, the bottom of the expandable member 125 may be positioned appropriately relative to the base 119. If the bottom of the expandable member 125 is inappropriately positioned (for example, if the bottom is located too far from the base 119 of the mould) then, during expansion, the expandable member 125 may contact an upper part of a receptacle 22 before the expandable member 125 has filled a lower part of the receptacle 22. Further expansion of the expandable member 125 in a downward direction may then be inhibited by friction between the expandable member 125 and the upper part of the receptacle 22. Inhibited expansion may result in the expandable member 125 not fully filling the lower part of the receptacle 22. This may lead to an incorrect pressure being applied to the lower part of the receptacle 22 (for example, a base of the receptacle 22). Thereby, this part of the receptacle 22 may be insufficiently compacted leading to a weakness in the receptacle 22. Alternatively, inhibited expansion may result in the expandable member 125 stretching excessively to fully fill the lower part of the receptacle 22. Excessive stretching may reduce the uniformity of the pressure applied by the expandable member 125 to the receptacle 22. This reduction in uniformity may be detrimental to the quality of the receptacle 22, for example, resulting in weaknesses or variable thickness in the receptacle 22. Additionally, excessive stretching may fatigue the expandable member 125, thereby reducing the longevity of the expandable member 125, or lead to rupturing of the expandable member 125. Having a moveable mandrel 123 enables appropriate positioning of the expandable member 125 within the mould cavity

115. As a result, the quality of receptacles manufactured in the mould system 101 may be improved and/or the longevity of the expandable member 125 may be improved.

By moving the mandrel 123 relative to the connector 121 to vary the length of the expandable member 125 and thereby to vary the width of the expandable member 125, the width of the expandable member 125 may be varied to best suit the requirements of a manufacturing process which employs the mandrel system 105. For example, reducing the width of the expandable member 125 may be beneficial in facilitating passage of the expandable member 125 through the opening 117 of the mould 103 which occurs when the expandable member 125 is inserted into, and subsequently withdrawn from, the mould 103. Reducing the width may enable the expandable member 125 to pass through the opening 117 without contacting the mould 103 and thereby damaging the expandable member 125. Additionally, reducing the width may reduce the likelihood of the expandable member 125 contacting and damaging the receptacle 22 during insertion and/or withdrawal. Increasing the width of the expandable member 125 may be beneficial during expansion of the expandable member 125 as the expandable member 125 may be able to expand relatively uninhibited by the mandrel 123. Uninhibited expansion of the expandable member 125 may improve the magnitude and uniformity of a pressure applied by the expandable member 125 to the receptacle 22 during the forming operation. Additionally, uninhibited expansion may reduce stress concentrations in the expandable member 125 which may damage or fatigue the expandable member 125 and thereby the longevity of the expandable member 125 may be improved.

In the above example, the end of the mandrel 123 is detachably attached to the expandable member 125. As a result, the end of the mandrel 123 may be attached or detached from the expandable member 125 during different stages of the manufacturing process. For example, when attached to the mandrel 123, the expandable member 125 may be more easily positioned and moved. This may be beneficial for positioning the expandable member 125 within the mould 103 prior to expansion, and/or during insertion or withdrawal of the expandable member 125 from the mould 103. When detached from the mandrel 123, the expandable member 125 may expand uninhibited by the mandrel 123. Uninhibited expansion of the expandable member 125 may improve the magnitude and uniformity of the pressure applied by the expandable member 125 to the receptacle

22 within the mould 103. Thereby, the quality of the receptacle 22 may be improved due to improved compaction which may result from the improved magnitude and uniformity of the pressure applied. Additionally, uninhibited expansion may reduce stress concentrations in the expandable member 125 which may damage or fatigue the expandable member 125. Thereby, the longevity of the expandable member 125 may be improved.

In the above example, the clearance between the bottom of the expandable member and the base of the mould, following insertion but prior to expansion, has a predetermined value of 8 mm. However, other values for the clearance may be used. As discussed previously, as the clearance between the bottom of the expandable member and the base of the mound decreases, the likelihood of downward expansion of the expandable member 125 being inhibited is reduced. This may reduce the likelihood of insufficient compaction leading to a weakness in the receptacle 22 and/or excessive stretching of the expandable member 125 leading to fatigue of the expandable member 125. However, as the clearance decreases, the likelihood of suboptimal expansion of the expandable member 125 occuring increases. Specifically, the expandable member 125 may prematurely contact the base of the receptacle 22, which may inhibit the subsequent expansion of the expandable member 125 outwards into the corners of the receptacle 22. This may reduce the quality of the receptacle 22 and/or reduce the longevity of the expandable member 125, as also described above. A good balance between the competing needs of reducing the likelihood of inhibited downward expansion and reducing the likelihood of suboptimal expansion may be provided by a clearance of no greater than 11 mm and no less than 2 mm.

Although a user may manually input a required clearance (for example, via the control panel), in this example the controller 131 is configured to select or determine a predetermined clearance based on a characteristic of the mould 103 and a characteristic of the expandable member 125. In examples, the controller 131 receives a characteristic of the mould 103 and a characteristic of the expandable member 125 via the control panel. The controller 131 then selects a predetermined clearance from a lookup table, indexed using the received characteristic of the mould 103 and the received characteristic of the expandable member 125. Thereby an operator is not required to calculate a new clearance

should a different mould or a different expandable member be used. Thereby, the downtime incurred when switching between moulds may be reduced. The lookup table may have been previously generated through experimentation and process modelling to determine the optimum predetermined value for different characteristics. The characteristic of the mould 103 may be one of a height, a width and a geometry of the mould 103. The characteristic of the expandable member 125 may be one of a height, a width, a geometry and an elasticity of the expandable member 125.

Turning now to Figure 4, the mould system 101 further comprises a further mould 201. The further mould 201 comprises a further mould cavity 203 which has a different geometry to that of the mould cavity 115. Specifically, the height of the further mould cavity 203 is less than that of the mould cavity 115. As a result, the mould system 101 may be used to form a range of receptacle sizes. Irrespective of the geometry of the mould cavities 115,203, the controller 131 moves the mandrel 123 and the expandable member 125 such that the clearance between the bottom of the expandable member 125 and the bases 119,205 of the mould cavities 115,203 is the same predetermined value. As a result, the expandable member 125 may be appropriately positioned for each mould 103,201 without requiring a bespoke mandrel and expandable member for each mould 103,201. This may reduce the cost of the mould system 101 as well as reduce processing times by removing the need to switch the mandrel 123 and expandable member 125 when switching moulds 103,201.

In the above examples, the first part 137 of the attachment mechanism comprises a magnet 137 and the second part 139 of the attachment mechanism comprises a magnetically-attractable element in the form of a metallic plate 139. Equally, in other examples, the first part 137 and the second part 139 may comprise a plug and a socket, or a clamp and a clampable structure. Indeed, it is conceivable that the attachment mechanism is a single part located on either the mandrel 123 or the expandable member 125, for example, a clamp on the mandrel 123 which clamps a portion of the expandable member 125.

In the above examples, the connector 121 contacts and connects to the top of the mould 103. However, in other examples the connector 121 may not contact and connect

to the top of the mould 103. Instead, the connector 121 may be moved downward until the connector 121 is at a prescribed location above the top of the mould 103, with the mandrel 123 and the expandable member 125 extending into the mould 103. In this example, the reference point 133 is at a fixed position relative to mould 103 when the connector 121 is at the prescribed location.

In the above example, the movement of the connector 121 and mandrel 123 are controlled by the controller 131. However, it is conceivable that an operator could manually control the movement. However, employing a controller may improve overall product quality and may result in reduced processing times and increased throughput.

In the above example, the mandrel 123 and the expandable member 125 of the mandrel system 105 are inserted into and withdrawn from the mould cavity 115 through the opening 117. It will be appreciated that the whole mandrel system 105 need not be inserted. Therefore, by inserted it is meant that at least a part of the mandrel system 105 is inserted.

In the above example, the mandrel system 123 comprises an attachment mechanism 137,139 for detachably attaching the expandable member 125 to the mandrel 123. However, in other examples, the attachment mechanism may be omitted. For example, Figure 5 shows an example of a mandrel system 301 where the expandable member 125 is fixedly attached to the mandrel 123. The mandrel system 301 is identical to the mandrel system of Figure 2, but with the following differences.

The attachment mechanism 137,139 is omitted and the bottom of the body portion of the expandable member 125 is fixedly attached to the lower end of the mandrel 123.

The first actuator 303 is operable in a first mode and a second mode. In the first mode, the first actuator 303 causes the mandrel 123 to move linearly, relative to the reference point 133, along the longitudinal axis of the mandrel 123. In the second mode, the first actuator 303 permits the mandrel 123 to move freely relative to the reference point 133. For example, the first actuator 303 may be decoupled from the mandrel 123 (e.g., using a clutch) in the second mode to permit the mandrel 123 to move freely. In

another example, the first actuator 303 may be set to an idle mode in which the first actuator 303 remains coupled to the mandrel 123 but provides little to no resistance to the movement of the mandrel 123. In examples where the first actuator 303 comprises a hydraulic system, the hydraulic system may be vented to atmosphere in idle mode.

Turning now to Figure 6, the mandrel system 301 operates in an identical way to the mandrel system of Figure 2, but with the following differences.

The expandable member 123 remains attached to the mandrel 125 during all stages of operation. The controller 131 operates the first actuator 127 in the first mode to move the mandrel 123 up and down relative to the reference point 133.

To perform the forming operation on the receptacle 22 (Figure 6(e)), the controller 131 controls the pump 107 to supply the pressurised fluid to the mandrel 123 which flows through the holes 135 in the mandrel 123 and into the expandable member 125 to expand the expandable member 125. Concurrently, the controller 131 operates the first actuator 303 in the second mode of operation, which permits the mandrel 123 to move freely relative to the reference point 133. As a result, the mandrel 123 does not inhibit the expansion of the expandable member 125. The expansion of the expandable member 125 causes the mandrel 123 to move down towards the base 119 of the mould 103. The expandable member 125 continues to expand within the receptacle 22. With sufficient expansion, the expandable member 125 contacts and compresses the receptacle 22 against the mould 103 to form the receptacle 22.

Turning now to Figure 6(f), once the forming operation is complete, the controller 131 controls the pump 107 to withdraw the pressurised fluid from the expandable member 125, which causes the expandable member 125 to collapse and contract. The first actuator 303 continues to operate in the second mode. Consequently, as the expandable member 125 contracts, the mandrel 123 moves upward together with the bottom of the expandable member 125.

In the example of Figure 5, the mandrel 123 is moveable relative to the connector 121 in response to expansion of the expandable member 125. As a result, the expandable

member 125 may expand relatively uninhibited by the mandrel 123 whilst also being attached to the mandrel 123. Being attached to the mandrel 123 may beneficially enable the mandrel 123 to manipulate the expandable member 125, which may improve the functionality of the mandrel system 301.

In the example of Figure 5, when operating in the second mode, the first actuator 303 permits the mandrel 123 to move freely relative to the reference point 133. However, in other examples, when operating in the second mode, the first actuator 303 may instead actively move the mandrel 125 in response to expansion of the expandable member 125. Specifically, during expansion of the expandable member 125, the first actuator 303 may move the mandrel 123 down towards the base 119 of the mould 103, possibly at a rate which matches the expansion of the detached expandable member 125 of Figure 3(e). During the subsequent collapse of the expandable member 125, the first actuator 303 may move the mandrel 123 up away from the base 119 of the mould 103, thereby causing the expandable member 125 to collapse.

In the example of Figure 5, the mandrel 125 is unitary, which may provide a relatively simple and robust mandrel. However, in other examples, the mandrel may be a multi-part mandrel. For example, Figure 7 shows an example of a mandrel system 401 comprising a two-part mandrel 403. The mandrel system 401 is identical to the mandrel system 105 of Figure 5, but with the following differences.

The mandrel 403 comprises a first part 405 and a second part 407. The first part 405 has the form of a cylindrical tube and comprises a plurality of holes 135 formed along the length of the first part 405. The holes 135 are located along the lower portion of the first part 405 and extend radially through the first part 405 to allow fluid to flow from the interior of the mandrel 403 to the exterior of the mandrel 403.

The second part 405 has a cylindrical shape and has a smaller outer diameter than the inner diameter of the first part 409. The second part 407 is located inside the first part 405 at the lower end of the first part 405. An end of the second part 407 is attached to the body portion of the expandable member 125. The second part 407 is keyed to the first part 405 such that the second part 407 moves linearly relative to the first part 405 but is

prevented from rotating relative to the first part 405. For example, the first part 405 may comprise a channel which extends parallel to a longitudinal axis of the first part 405, and the second part 407 may comprise a projection which is received within the channel. The second part 407 moves along the longitudinal axis of the first part 405 between a contracted position and an extended position. The length of the mandrel 403 is greater in the extended position than in the contracted position.

The first and second actuators 409, 411 are similar to the actuators 303, 129 of Figure 5 except that the first actuator 409 only operates in the first mode. The actuators 409, 411 are each coupled to the first part 405 of the mandrel. The first actuator 409 is operable to cause the first part 405 of the mandrel 403 to move linearly, relative to the connector 121 and the reference point 133, along the longitudinal axis of the mandrel 403. The second actuator 411 is operable to cause the first part 405 of the mandrel 403 to rotate relative to the connector 121 and the reference point 133. Since the first part 405 is keyed to the second part 407 of the mandrel 403, rotation of the first part 405 causes the second part 407 to also rotate.

Turning now to Figure 8, the mandrel system 401 operates in an identical to the mandrel system of Figure 5, but with the following differences.

As shown in Figure 8(a), operation of the mandrel system 401 commences with the two parts 111,113 of the mould 103 being closed around a receptacle 22, such that the receptacle 22 is located inside the mould cavity 115. At this stage, the mandrel system 401 is located outside of the mould cavity 115 and the expandable member 125 is in a collapsed state. In the collapsed state, the length of the mandrel 403 which extends beneath the connector 121 is the same as the natural (unstretched) length of the expandable member 125. Thereby, when the expandable member 125 is in the collapsed state, the second part 407 of the mandrel 403 is biased towards the contracted position by the expandable member 125. Specifically, the elasticity of the expandable member 125 biases the second part 407 towards the contracted position.

To perform the forming operation on the receptacle 22 (Figure 8(e)), the controller 131 controls the pump 107 to supply the pressurised fluid to the mandrel 403 which flows

through the holes 135 in the mandrel 403 and into the expandable member 125 to expand the expandable member 125. As the expandable member 125 expands, the bottom of the expandable member 125 moves down towards the base 119 of the mould 103. The downward motion of the bottom of the expandable member 125 results in the second part 407 of the mandrel 403 moving from the contracted position to the extended position. The expandable member 125 continues to expand within the receptacle 22. With sufficient expansion, the expandable member 125 then contacts the receptacle 22 and applies pressure to compresses the receptacle 22 against the mould 103 to form the receptacle 22.

Turning now to Figure 8(f), once the forming operation is complete, the controller 131 controls the pump 107 to withdraw the pressurised fluid from the expandable member 125, which causes the expandable member 125 to collapse and contract. As the expandable member 125 contracts, the bottom of the expandable member 125 moves upward away from the base 119 of the mould 103. This upward motion of the bottom of the expandable member 125 results in the second part 407 of the mandrel 403 moving from the extended to the contracted position.

In the example of Figure 7, the expandable member 125 is attached to the second part 407 of the mandrel 403, and the second part 407 moves relative to the first part 405 in response to expansion of the expandable member 125. As a result, the above-mentioned benefits of the expandable member 125 expanding relatively uninhibited whilst also being attached to the mandrel 403 may be achieved. Additionally, providing a two-part mandrel 403 may provide a convenient means of enabling the end of the mandrel 403 to move relative to the connector 121 in response to expansion of the expandable member.

In the example of Figure 7, the first part 405 of the mandrel 403 is moveable relative to the connector 121. However, it is conceivable that in other examples the first part 405 of the mandrel 403 is fixedly attached to the connector 121 and thereby immoveable relative to the reference point 133. In this example, the connector 121 and the first part 405 are moved together during insertion and withdrawal of the mandrel 403 and expandable member 125. During expansion and collapse of the expandable member 125, the second part 407 of the mandrel 403 is still able to move relative to the first part

405 of the mandrel 403 and thereby the expansion and collapse of the expandable member 125 continue to be uninhibited by the mandrel 403.

In the above examples, the movement of the mandrel 123 relative to reference point 133 is controlled such that the clearance between the bottom of the expandable member 125 and the base 119 of the mould 103 can be varied. However, it is conceivable that in other examples movement of the mandrel 123 relative to the reference point 133 may not cause the clearance to vary. For example, the lower end of the mandrel 123 may not be attached to the bottom of the expandable member 125. The clearance between the bottom of the expandable member 125 and the base 119 of the mould 103 is then dictated by the natural (unstretched) length of the expandable member 125. Should the connector 121 be moved up relative to the mandrel 123, the end of the mandrel 123 will contact the bottom of the expandable member 125 and apply a force to increase the length and thereby decrease the width of the expandable member 125. Moving the connector 121 down relative to the mandrel 123 would then remove the force, resulting in the expandable member 125 returning to its natural length and width. This arrangement may achieve the above-mentioned benefit of varying the width of the expandable member 125 to suit the requirements of the manufacturing process but may not realise the above-mentioned benefits of appropriately positioning the expandable member 123. Nevertheless, as the clearance is dictated by the natural length of the expandable member 125, the expandable member 125 can be optimised for the specific geometry of the mould 103.

Example embodiments of the present invention have been discussed, with reference to the examples illustrated. However, it will be appreciated that variations and modifications may be made without departing from the scope of the invention as defined by the appended claims.

CLAIMS:

1. A mandrel system for use with a mould to mould a receptacle, the mandrel system comprising:

a component;

a mandrel; and

an expandable member,

wherein:

the mandrel is at least partially located, or at least partially locatable, inside the expandable member and comprises one or more holes through which a fluid is flowable in use from an interior of the mandrel to an exterior of the mandrel to expand the expandable member;

the expandable member is attached, or is attachable, to the component; and

when the expandable member is attached to the component and the mandrel is at least partially located inside the expandable member, an end of the mandrel is moveable relative to the component to vary a length of the expandable member and thereby to vary a width of the expandable member.

2. The mandrel system of claim 1, wherein the expandable member is attached, or is attachable, to the end of the mandrel.

3. The mandrel system of claim 2, wherein the expandable member is detachably attached, or detachably attachable, to the end of the mandrel.

4. The mandrel system of claim 3, wherein the expandable member is arranged to detach from the end of the mandrel in response to expansion of the expandable member.

5. The mandrel system of any one of claims 1 to 4, wherein the end of the mandrel is rotatable relative to the component to twist the expandable member around the mandrel.

6. The mandrel system of any one of claims 1 to 5, wherein the mandrel has a cylindrical shape.

7. The mandrel system of any one of claims 1 to 6, wherein the mandrel system comprises a controller configured to cause movement of the end of the mandrel relative to the component.

8. The mandrel system of claim 7, wherein:

the end of the mandrel is moveable relative to the component along a longitudinal axis;

the end of the mandrel is rotatable relative to the component about the longitudinal axis; and

the controller is configured to cause rotation of the end of the mandrel relative to the component about the longitudinal axis concurrently with causing movement of the end of the mandrel relative to the component along the longitudinal axis.

9. A mould system for moulding a receptacle, the mould system comprising:

a mould comprising a mould cavity and an opening; and

the mandrel system of any one of claim 1 to 8,

wherein the mandrel system is insertable into the mould cavity via the opening and usable with the mould to mould the receptacle in the mould cavity.

10. The mould system of claim 9, wherein:

the mandrel system comprises a reference point;

the mandrel system is positionable relative to the mould such that the reference point is at a fixed position relative to the mould and the mandrel and the expandable member extend into the mould cavity through the opening such that there is a clearance between the expandable member and a base of the mould cavity opposite the opening; and

the end of the mandrel and the expandable member are moveable relative to the reference point to vary the clearance.

11. The mould system of claim 10, wherein the component of the mandrel system comprises a connector for connecting the mandrel system to the mould, and the reference point is comprised by the connector.

12. The mould system of any of claims 9 to 11, wherein:

the end of the mandrel is moveable relative to the component between a first position and a second position; and

when the end of the mandrel is in the second position, the width of the expandable member is no greater than a width of the opening.

13. A method of moulding a receptacle, the method comprising:

providing a mould comprising a mould cavity and an opening;

providing the mandrel system of any one of claims 1 to 8;

when the expandable member is attached to the component and the mandrel is at least partially located inside the expandable member, moving the end of the mandrel relative to the component to vary the length of the expandable member and thereby to vary the width of the expandable member; and

inserting the mandrel system into the mould cavity via the opening or withdrawing the mandrel system from the mould cavity via the opening.

14. The method of claim 13, wherein the method comprises at least one of: detaching the end of the mandrel from the expandable member after the inserting the mandrel system into the mould cavity via the opening, and attaching the end of the mandrel to the expandable member prior to the withdrawing the mandrel system from the mould cavity via the opening.

15. The method of claim 13 or claim 14, wherein the method comprises:

expanding the expandable member; and

detaching the end of the mandrel from the expandable member during the expanding the expandable member.

16. The method of any one of claims 13 to 15, wherein the method comprises at least one of rotating the end of the mandrel relative to the component to twist the expandable member around the mandrel and rotating the end of the mandrel relative to the component to untwist the expandable member from around the mandrel.

17. The method of claim 16, wherein the rotating the end of the mandrel relative to the component is concurrent with the moving the end of the mandrel relative to the component to vary the length of the expandable member.

18. The method of any one of claims 13 to 17, wherein the mandrel has a cylindrical shape.

19. The method of any one of claims 13 to 18, wherein:

the moving the end of the mandrel relative to the component comprises moving the component relative to the mould whilst keeping the end of the mandrel stationary relative to the mould.

20. The method of any one of claims 13 to 19, wherein:

the mandrel system comprises a reference point; and

the method comprises:

moving the mandrel and the expandable member relative to the reference point to vary a clearance between the expandable member and a base of the mould cavity opposite the opening of the mould; and

positioning the mandrel system relative to the mould such that the reference point is at a fixed position relative to the mould, and the mandrel and the expandable member extend into the mould cavity through the opening.

21. The method of any one of claims 13 to 20, wherein:

the moving the end of the mandrel relative to the component comprises moving the end of the mandrel between a first position and a second position relative to the component; and

when the end of the mandrel is in the second position, the width of the expandable member is no greater than a width of the opening.

22. The method of any one of claims 13 to 21, wherein the method comprises:

providing a receptacle within the mould cavity, the receptacle being formed, at least partially, of paper pulp;

inserting the mandrel system into the receptacle; and

expanding the expandable member as part of a forming operation to the receptacle.

23. A receptacle obtainable or obtained from a fabrication method comprising the method of any one of claims 14 to 22.

24. The receptacle of claim 23, wherein the receptacle is a bottle, such as a fibre bottle.

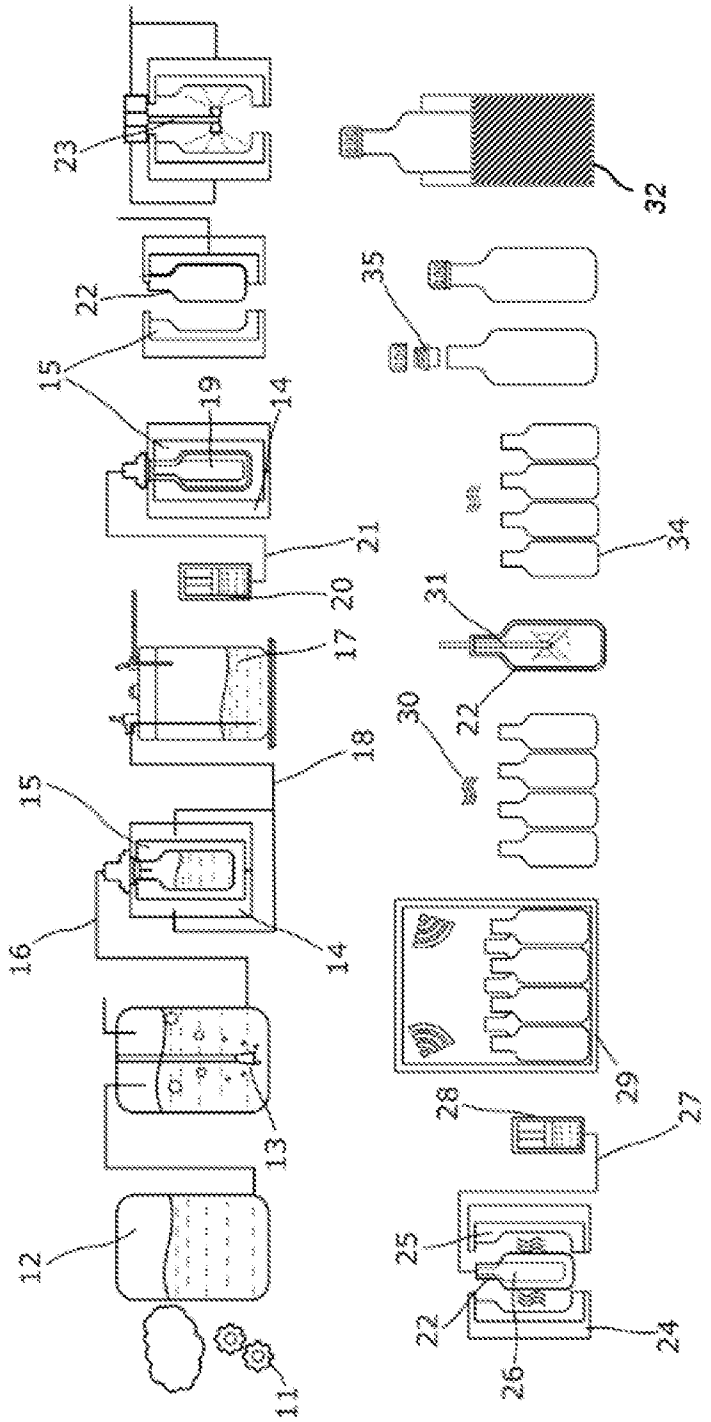
23
22
15
19
14
21
20
17
18
15
16
14
13
12
11
32
35
34
31
22
30
29
28
27
25
22
26
24

FIG. 1

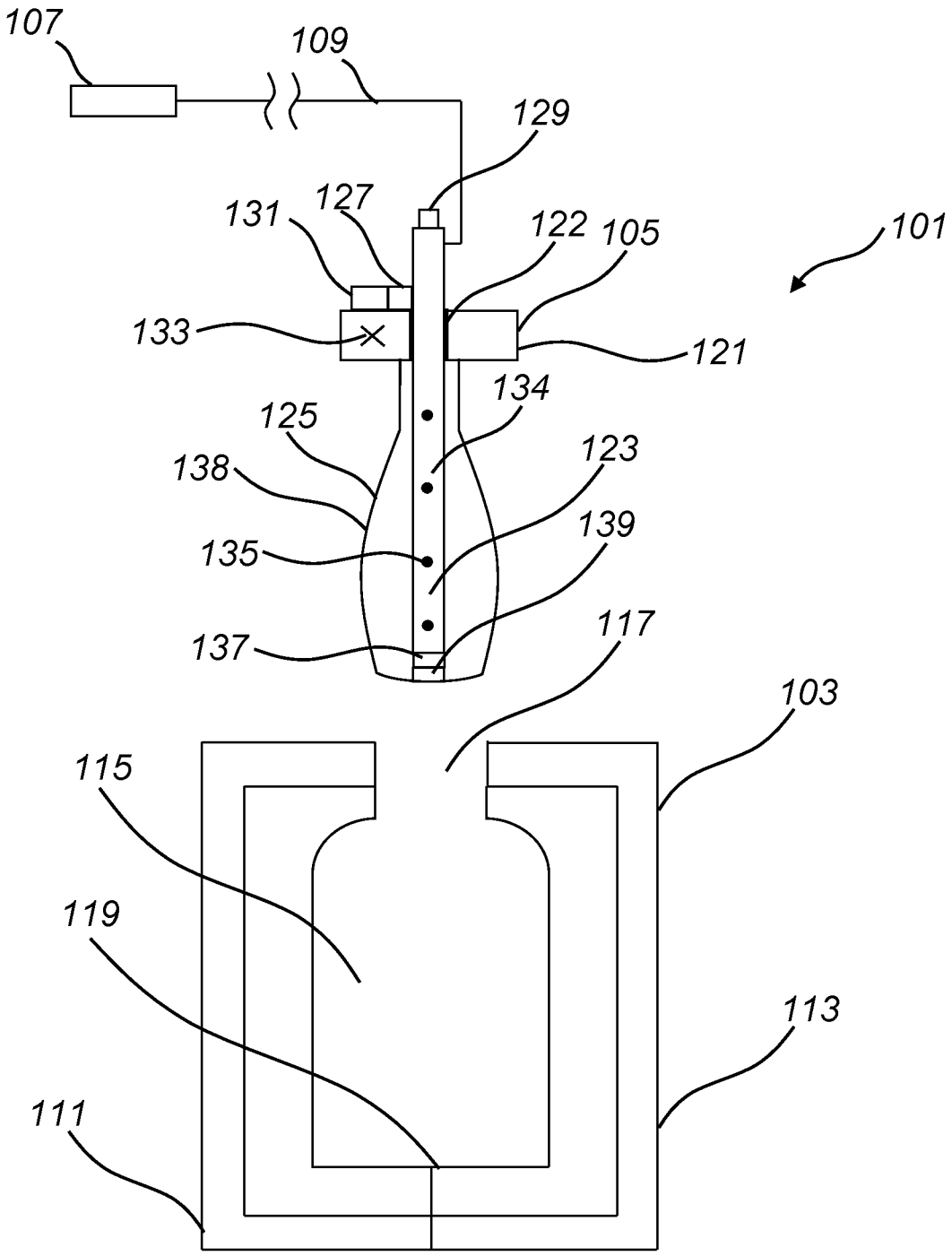
107
109
129
131
127
122
105
101
133
121
134
125
123
138
139
135
137
117
103
115
119
113
111

FIG. 2

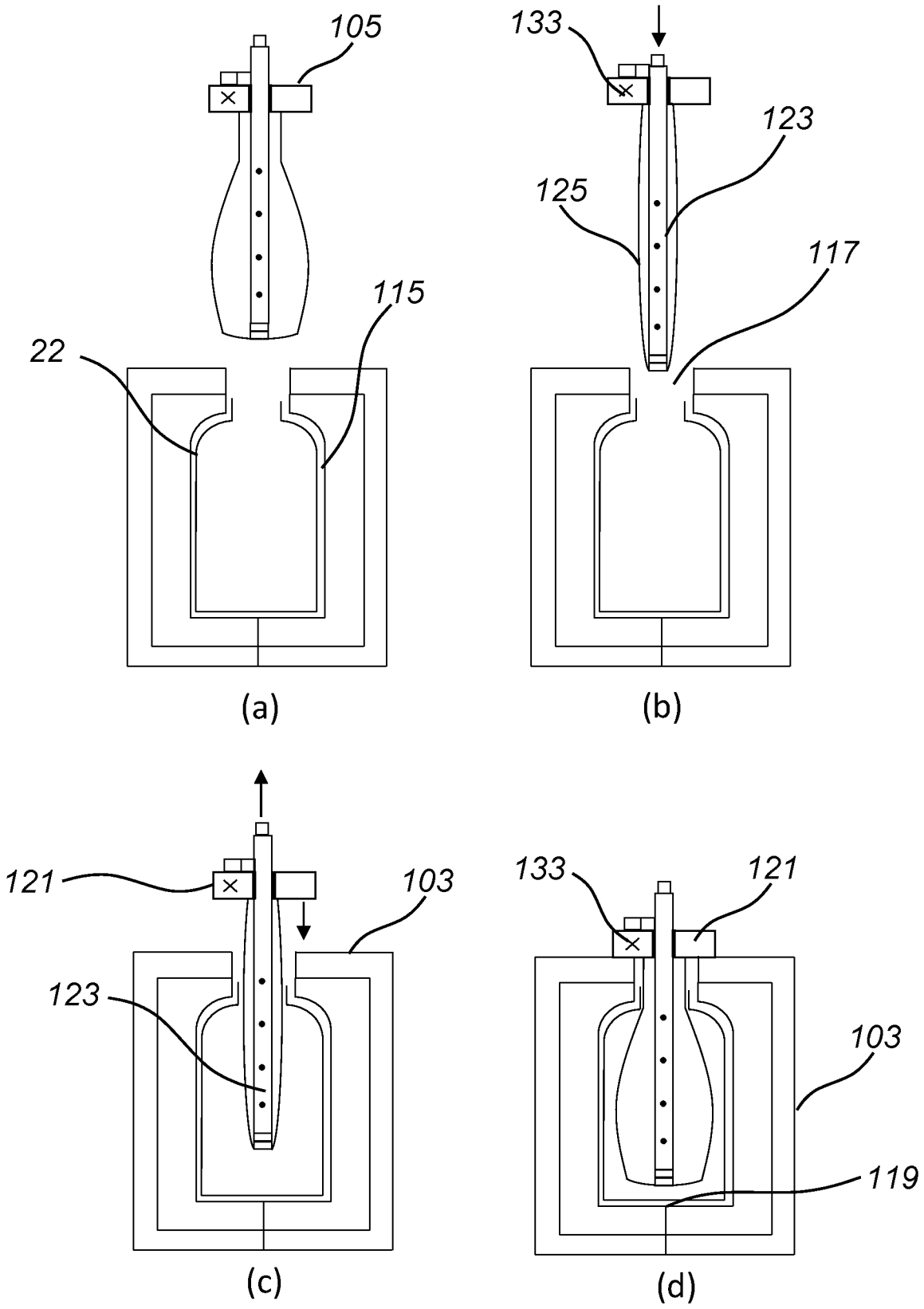

FIG. 3

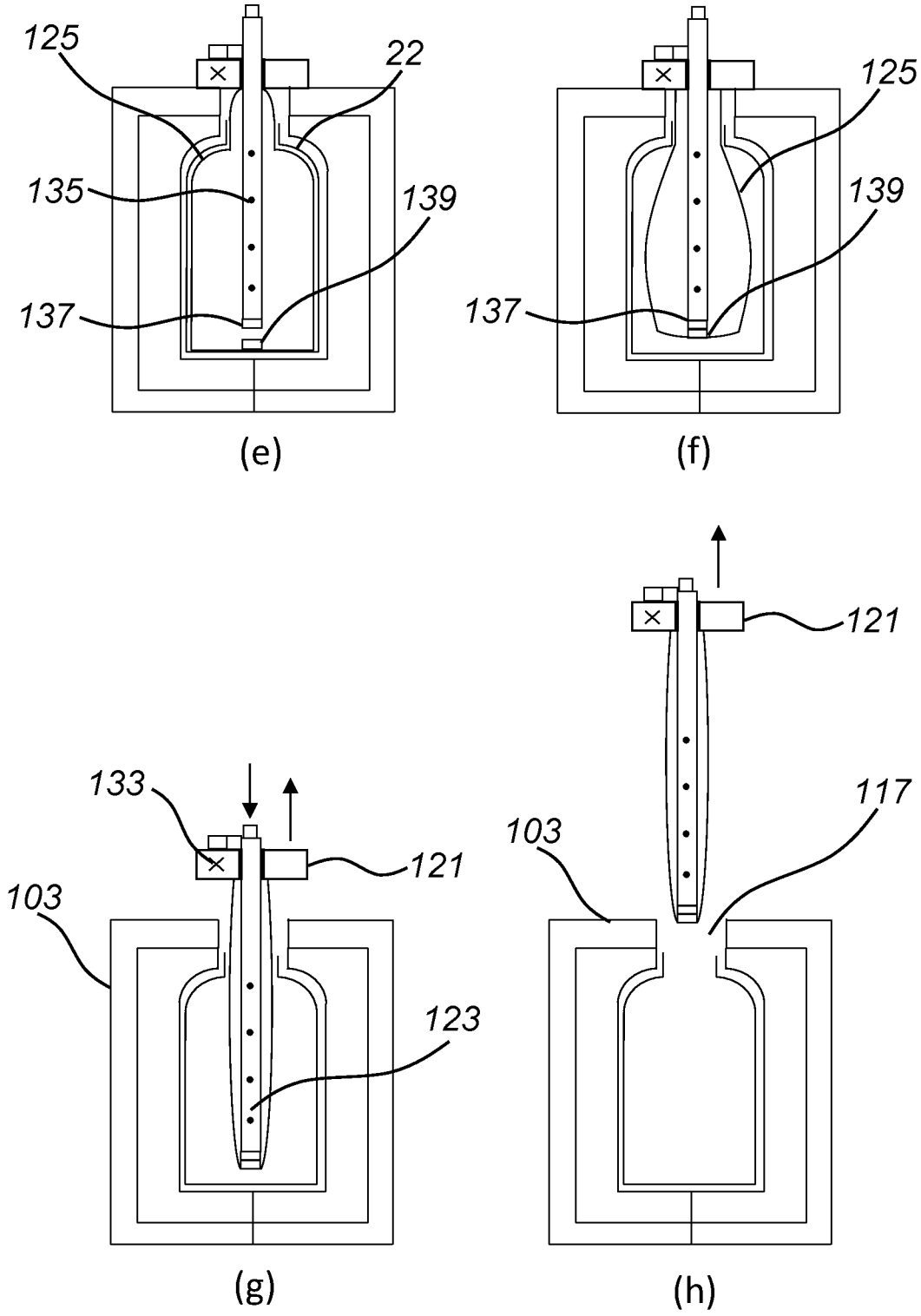

FIG. 3 (cont.)

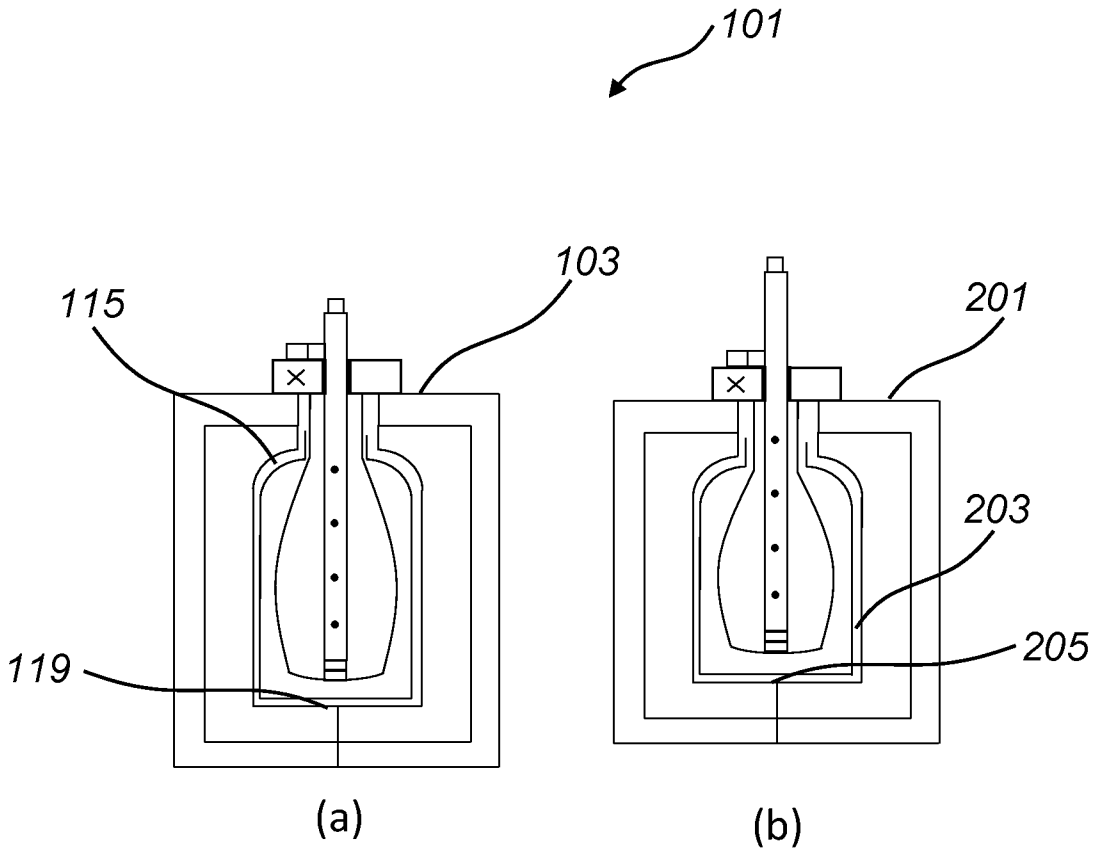

FIG. 4

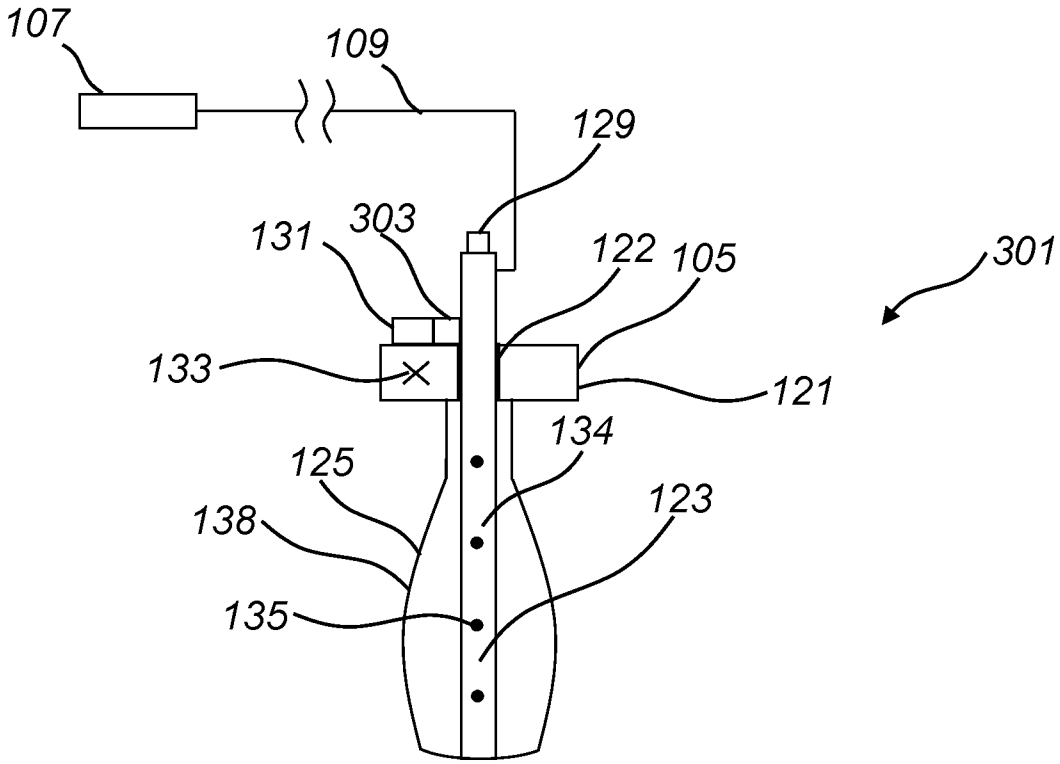

FIG. 5

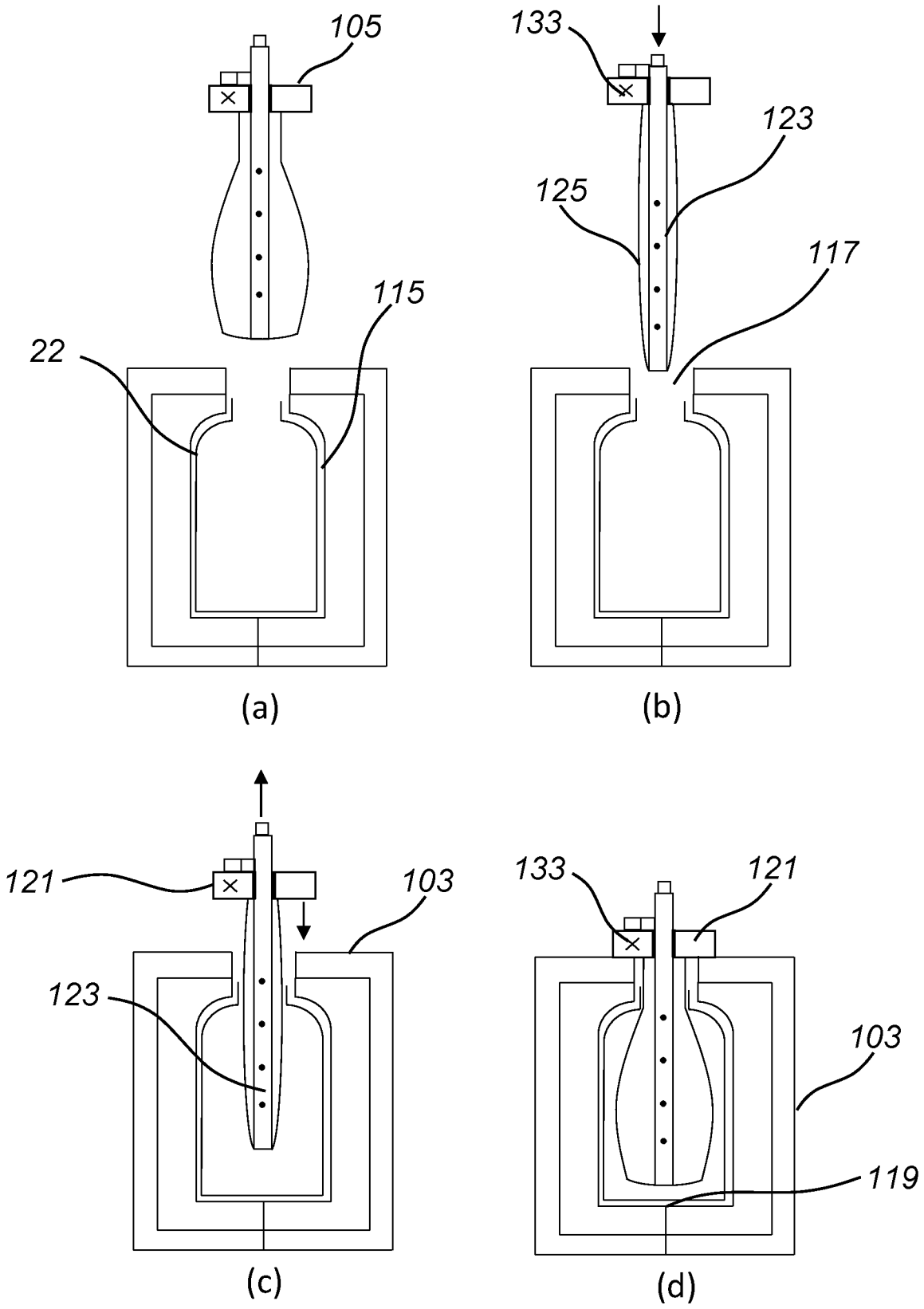

FIG. 6

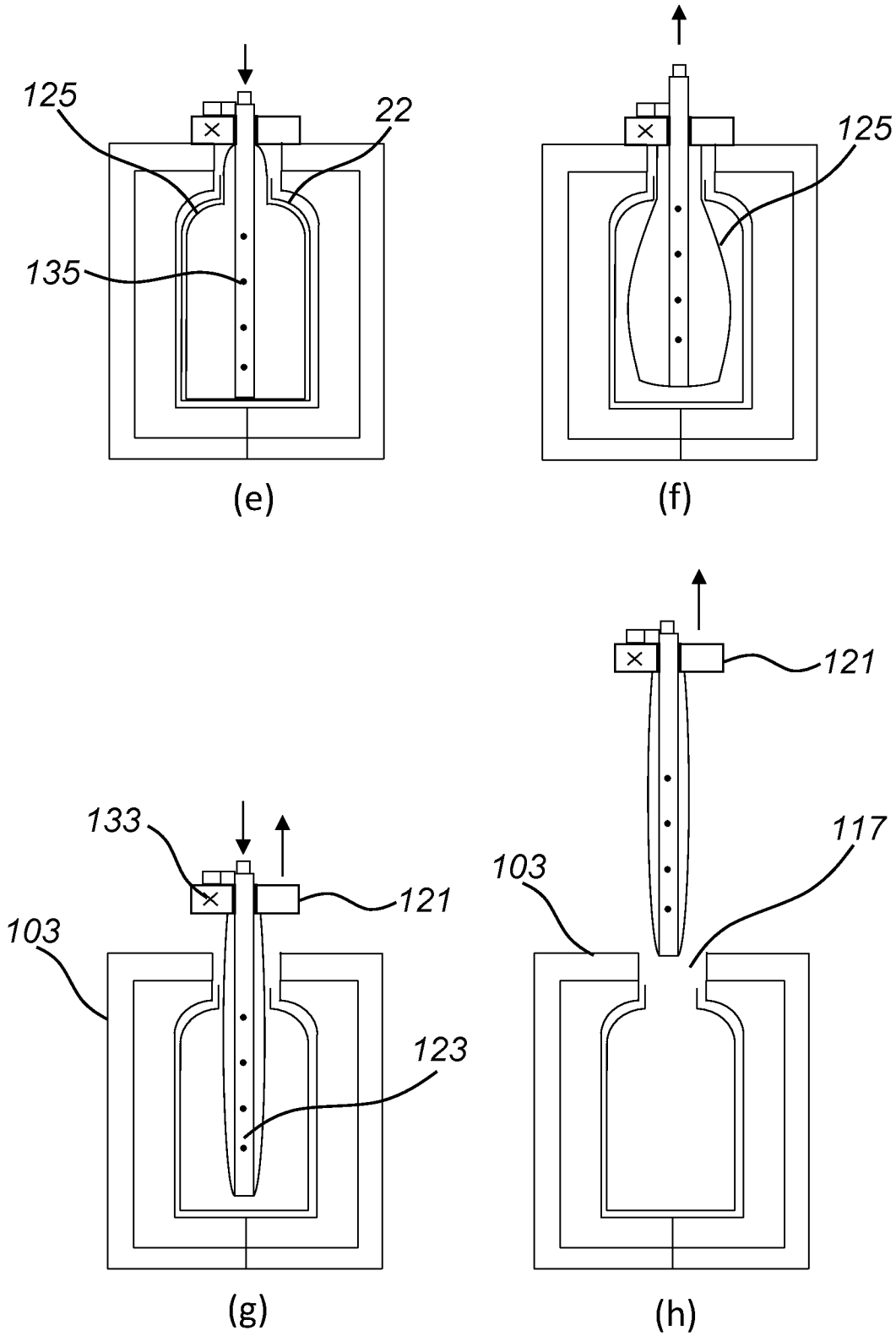

FIG. 6 (cont.)

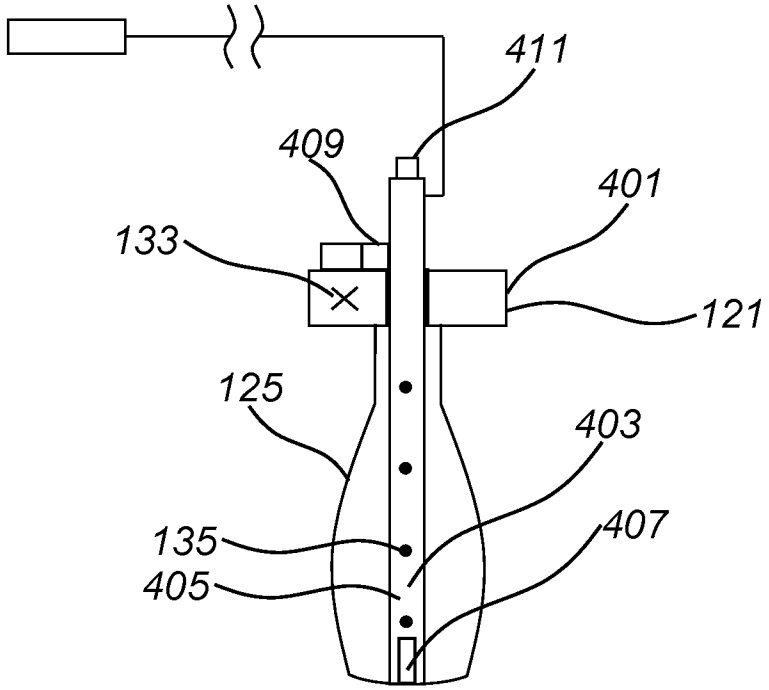

FIG. 7

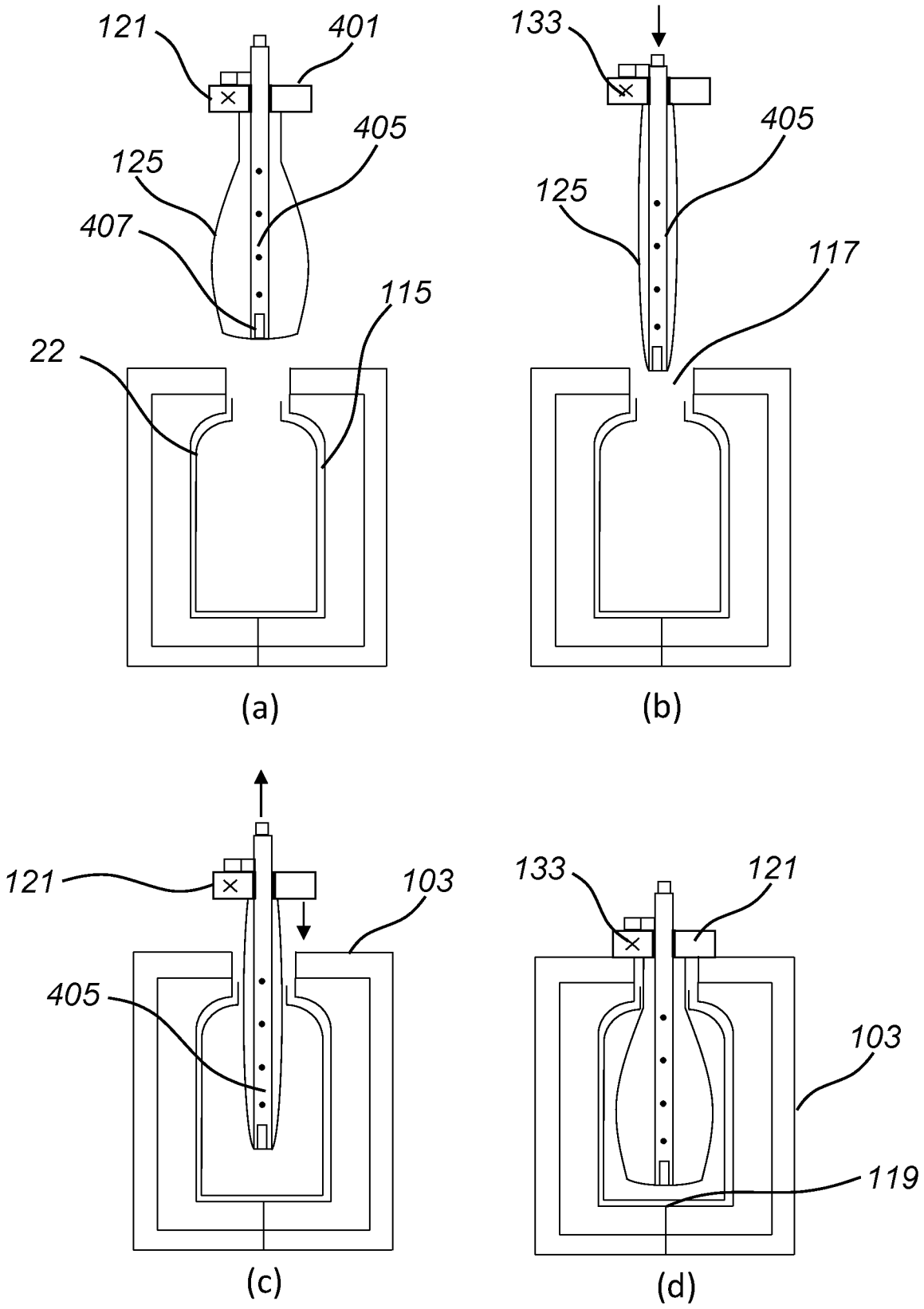
121
401
405
125
407
115
22
(a)
133
405
125
117
(b)
121
103
405
(c)
133
121
103
119
(d)

FIG. 8

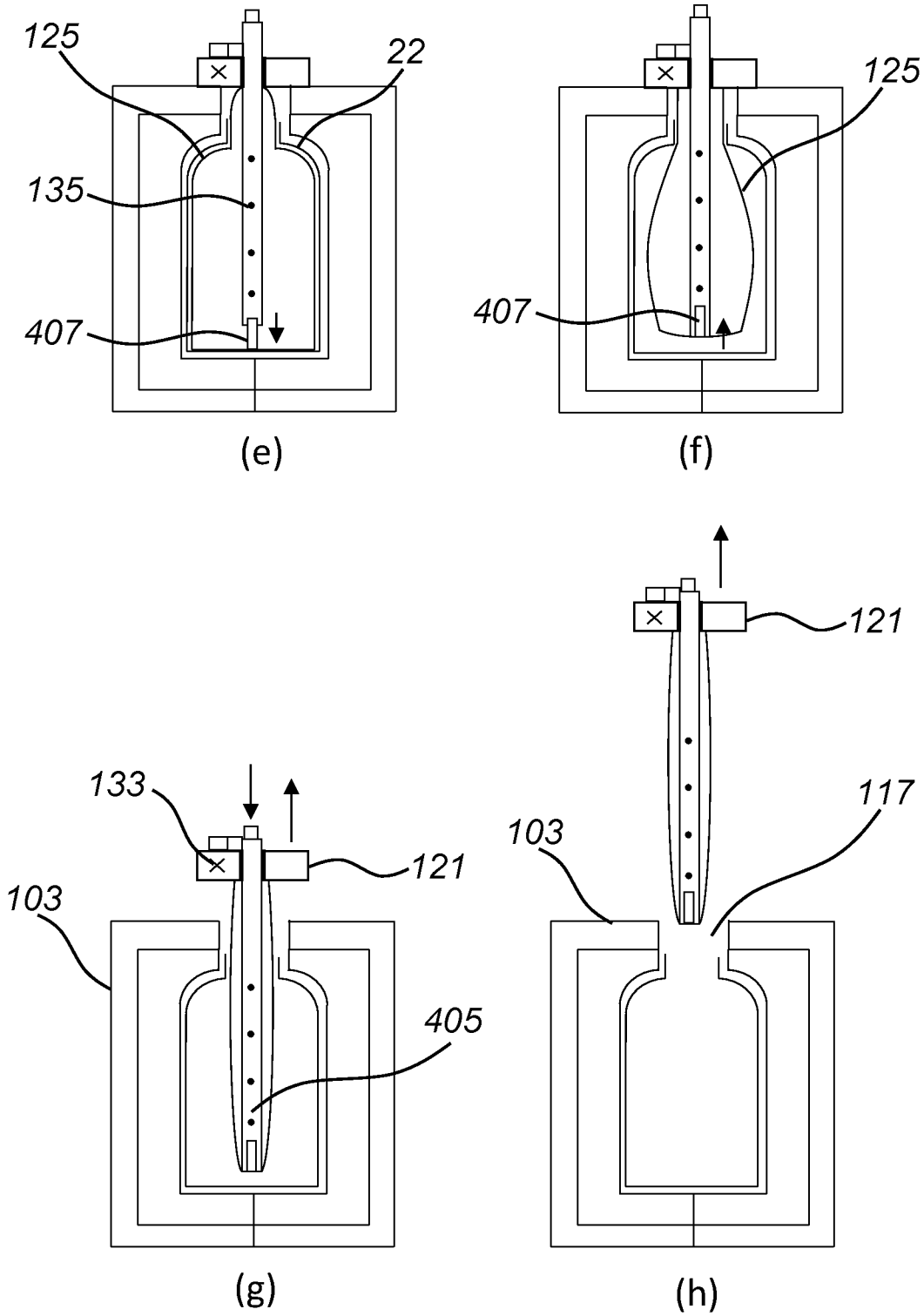

FIG. 8 (cont.)

INTERNATIONAL SEARCH REPORT

International application No
PCT/GB2023/051354

A. CLASSIFICATION OF SUBJECT MATTER
INV. D21J3/10 D21J7/00
ADD.

According to International Patent Classification (IPC) or to both national classification and IPC

B. FIELDS SEARCHED

Minimum documentation searched (classification system followed by classification symbols)
D21J

Documentation searched other than minimum documentation to the extent that such documents are included in the fields searched

Electronic data base consulted during the international search (name of data base and, where practicable, search terms used)
EPO-Internal

C. DOCUMENTS CONSIDERED TO BE RELEVANT

Category*	Citation of document, with indication, where appropriate, of the relevant passages	Relevant to claim No.
X	EP 1 029 978 A2 (KAO CORP [JP]) 23 August 2000 (2000-08-23)	23,24
A	paragraph [0025] - paragraph [0027]; figures 2A, 2B	1-22
A	EP 2 522 772 A1 (ECOXPAC AS [DK]) 14 November 2012 (2012-11-14) paragraph [0055]; figures 4-7	1-22
A	US 2004/065980 A1 (OSAKI MASAYUKI [JP]) 8 April 2004 (2004-04-08) paragraph [0034] - paragraph [0036]; figure 1	1-22

☐ Further documents are listed in the continuation of Box C.

☒ See patent family annex.

* Special categories of cited documents :

"A" document defining the general state of the art which is not considered to be of particular relevance

"E" earlier application or patent but published on or after the international filing date

"L" document which may throw doubts on priority claim(s) or which is cited to establish the publication date of another citation or other special reason (as specified)

"O" document referring to an oral disclosure, use, exhibition or other means

"P" document published prior to the international filing date but later than the priority date claimed

"T" later document published after the international filing date or priority date and not in conflict with the application but cited to understand the principle or theory underlying the invention

"X" document of particular relevance;; the claimed invention cannot be considered novel or cannot be considered to involve an inventive step when the document is taken alone

"Y" document of particular relevance;; the claimed invention cannot be considered to involve an inventive step when the document is combined with one or more other such documents, such combination being obvious to a person skilled in the art

"&" document member of the same patent family

Date of the actual completion of the international search	Date of mailing of the international search report
19 September 2023	27/09/2023

Name and mailing address of the ISA/	Authorized officer
European Patent Office, P.B. 5818 Patentlaan 2 NL - 2280 HV Rijswijk Tel. (+31-70) 340-2040, Fax: (+31-70) 340-3016	Swiderski, Piotr

1

INTERNATIONAL SEARCH REPORT

Information on patent family members

International application No
PCT/GB2023/051354

Patent document cited in search report	Publication date	Patent family member(s)	Publication date
EP 1029978 A2	23-08-2000	CN 1263968 A	23-08-2000
		DE 60024901 T2	29-06-2006
		EP 1029978 A2	23-08-2000
		US 6454906 B1	24-09-2002
EP 2522772 A1	14-11-2012	EP 2522772 A1	14-11-2012
		EP 2697429 A1	19-02-2014
		WO 2012139590 A1	18-10-2012
US 2004065980 A1	08-04-2004	CN 1484722 A	24-03-2004
		DE 60217524 T2	16-05-2007
		EP 1428932 A1	16-06-2004
		JP 3415609 B2	09-06-2003
		JP 2003096700 A	03-04-2003
		US 2004065980 A1	08-04-2004
		WO 03027392 A1	03-04-2003