July 7, 1925. 1,544,724

A. McL. CHALMERS

BOOKHOLDER

Filed Feb. 24, 1923

Fig. 1.

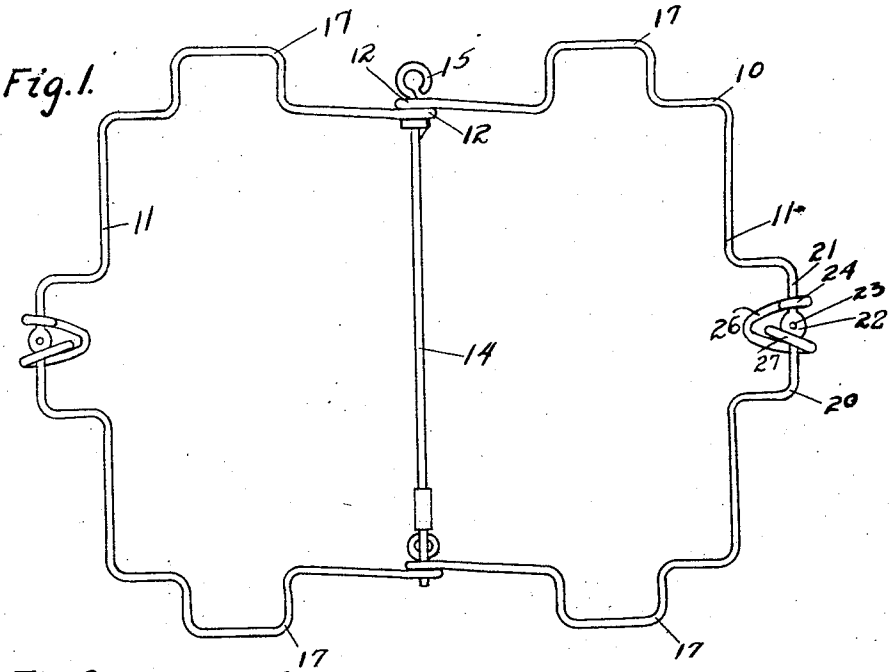

Fig. 2.

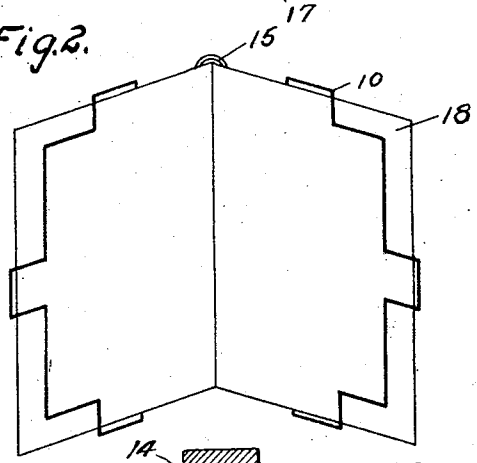

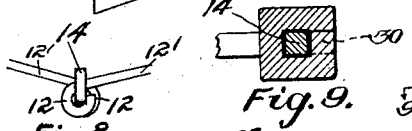

Fig. 8. Fig. 9.

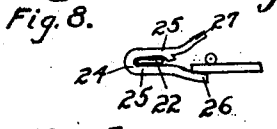

Fig. 5.

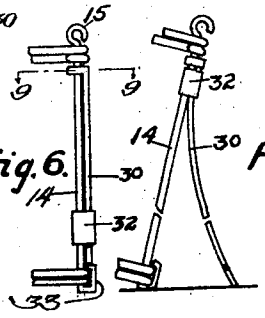

Fig. 6.

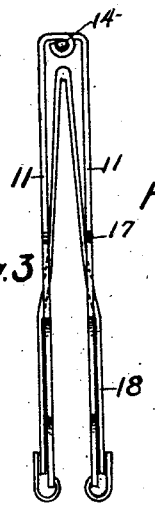

Fig. 3. Fig. 7.

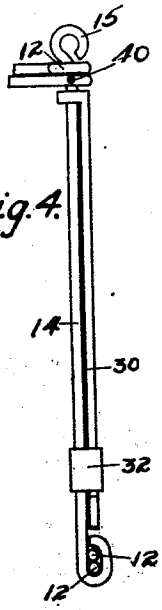

Fig. 4.

A. McL. CHALMERS

By B. J. Craig

Patented July 7, 1925. 1,544,724

UNITED STATES PATENT OFFICE.

ALEXANDER McL. CHALMERS, OF LOS ANGELES, CALIFORNIA.

BOOKHOLDER.

Application filed February 24, 1923. Serial No. 620,952.

To all whom it may concern:

Be it known that I, ALEXANDER McL. CHALMERS, a citizen of the United States, residing at Los Angeles, in the county of Los Angeles and State of California, have invented a certain new and useful Improvement in Bookholders, of which the following is a full, clear, and exact description, reference being had to the accompanying drawings.

This invention relates to book holders such as are employed for holding small books, pamphlets, sheet music, etc., in a convenient position to be read or studied.

The general object of the invention is to provide an improved form of book holder which, while simple in construction, nevertheless will hold an opened book in a secure manner.

One of the specific objects of my invention is to provide a book holder which may be made of bent metal, and wherein the holder body has means incorporated therewith so that the book will be held at the top and bottom with the leaves unobstructed.

An additional object of this invention is to provide a book holder, so constructed that the book on which the holder is secured can be closed without removing the holder.

A further object of the invention is to provide a book holder having locking members at the sides thereof for holding the leaves of the book, the members being operable, by a sliding action, to locking position.

Further objects of the invention will be apparent from the following description taken in connection with the accompanying drawing, wherein Fig. 1 is a plan view of a book holder showing my invention; Fig. 2 is a perspective view showing the holder applied to a book; Fig. 3 is an end view showing the holder in folded position with a pamphlet thereon; Fig. 4 is a fragmentary detail showing the pintle; Fig. 5 is an elevation of the clip. Figs. 6 and 7 are elevations showing details of the means for supporting the book holder, and Fig. 8 is fragmentary elevation of the end portion of the pintle. Fig. 9 is an enlarged section through 9—9 of Fig. 6.

Referring to the drawing by reference characters, I have shown a book holder at 10 as comprising a plurality of holding members 11—11 which may be similar in every respect. The members 11 are provided at their inner ends with eyes 12, which receive a pintle pin 14. The pintle pin 14 is provided with an eye 15 at its upper end, so that the book holder may be held upon a nail or other member.

Each of the holding members 11 is indicated as provided with outwardly extending loops 17 at the top and bottom and through the openings provided by the loops the leaves of the book or pamphlet 18 may be inserted. Other loops 20 are indicated as arranged on the side portions of the holder with the intermediate portion 21 of this projection flattened, as at 22, and provided with a recess 23 in the flattened portion. This flattened part serves to hold a clip 24 in position.

This clip 24 is shown in detail in Fig. 5, wherein it will be noted that the flat portion 22 is received between the spaced parts 25 of the clip 24, so that the latter is prevented from turning when the clip is moved towards the center from either side. The clip 24 is free to turn when at either side of the center. The portion 26 is adapted to engage the back of the book or pamphlet while the prong 27 is intended to temporarily hold any leaves of the book which may be desired to be used at times.

It will be noted that the sections 11 are identical in shape. The portions constituting the eyes 12 are preferably arranged so that these portions are at right angles to the pintle 14 when the parts are assembled as shown in Fig. 1.

In order that the book holder may serve as an easel, I show an arm 30 as secured to the pintle 14 adjacent the upper portion of the latter. The arm 30 is preferably of resilient metal and may preferably be square in cross section. The pintle 14, it is likewise to be noted, is also preferably square. A sliding sleeve 32 surrounds both the pintle and the arm and in the position shown in Fig. 7 this sleeve 32 is raised to allow the arm 30 to spring out away from the pintle and support the bookholder, while in Fig. 6 the sleeve 32 is moved toward the bottom of the pintle 14, this action causing the arm 30 to hug the pintle 14, with the lower portion of the arm, which may be an eye, arranged adjacent the portion 33 at the bottom part of the book holder.

By referring to Fig. 4 it will be noted that the lower portion of the pintle 14 is indicated as bent back upon itself in a manner to surround the eyes 12. The result of this

arrangement is that when the parts 11 are opened wide as shown in Fig. 8 the portions 12′ adjacent the eyes 12 engage the pintle 14 to prevent further movement. It will thus be seen that it is impossible to fold the book holder marker in the wrong direction, thus preventing breaking the back of the book.

In order that the eye 15 may remain in the plane of the portions 11 and not project when the parts are folded I now prefer to spot weld the lower eye member 12 to the pintle 14 as shown at 40 Fig. 4. Movement between the portion 11 of the holder at the left in Fig. 1 is accordingly prevented while the portion 11 at the right in Fig. 1 is free to move from the open to the closed position.

In using my device, a book is laid upon the holder with the center of the back of the book adjacent the pintle and over the latter. The leaves of the book are then thrust through the opening provided by the loops 17—17, thus bringing the leaves adjacent the fastener 24, which is then turned to position to hold the leaves.

This book holder is primarily intended for the use of persons who have occasion to study three or more pages of a book and in order that more than the two fronting pages may be available for reading, I provide the projections 27 on the front of the clip. The pages not in use, but which may be desired for use, are slipped under the projections 27 and may thus be retained.

Having thus described my invention, I claim:

1. The combination of a book and a book holder, said holder including a pintle member and a pair of leaf-engaging members secured to the pintle member, said leaf-engaging members comprising bent metal strips, a portion of which engage the outside part of the cover of the book, the remaining portion engaging the leaves of the book and means in the portion which engages the leaves of the book and adapted to engage the cover for securing the holder on the book.

2. The combination of a book and a book holder including a pintle member and a pair of leaf-engaging members secured to the pintle member, said leaf-engaging members comprising metal strips, a portion of which engage the back of the book and a portion engage the front of the book, leaf-engaging hooks on said holder and movable to locking position to hold a leaf firmly, means whereby said bookholder may be closed with the book thereon and additional means preventing said book being folded until the covers touch.

3. A book holder having a pintle member and a pair of leaf-engaging members secured to the pintle member, said leaf-engaging members comprising bent metal strips having outwardly directed portions at the top and bottom and having an outwardly directed portion at each side, leaf-engaging hooks on said side portions movable to locking position to hold a leaf firmly, said pintle being so arranged that the book may be closed with the holder thereon and additional means preventing said book holder from closing in an opposite direction, means for hanging said bookholder upon a wall, other means forming a support for the bookholder when set upon the table, including an arm and a clip for holding said arm against the pintle member, said clip also serving to hold said arm spaced from the pintle member.

4. A book holder comprising a pair of leaf-engaging members, a pintle member to which one of said leaf-engaging members is affixed and about which the other member turns, an eye at one end of the pintle member said eye being arranged in a plane parallel to the plane of the member to which the pintle is affixed and a book clamping device mounted on each of the leaf-engaging members.

5. A book holder including a pintle member and a pair of holding members secured to the pintle member, said holding members comprising bent strips having means thereon for engaging a book, a support for holding the book holder upright upon a table, said support including a flexible member mounted adjacent the top of the book holder, a sliding sleeve mounted on the holder and engaging said support, said sleeve being arranged to hold the support adjacent the pintle when not in use.

6. The combination of a book and a book holder including a pintle member and a pair of leaf-engaging members secured to the pintle member, said leaf-engaging members comprising strips which engage the back and the front of the book, leaf holding devices on said holder, said devices comprising bent metal hooks slidable on the leaf- engaging members and a locking lug for holding each of said hooks in position.

7. The combination of a book holder and a book, said holder comprising two hinged members arranged to fold together, each of said members comprising a single length of material bent to engage the front and back of the book, means for engaging the book carried by each of said members, said means comprising bent metal devices mounted to slide on said members to locking position, said devices having a hook for engaging the back of the book to hold the latter on the holder and having a prong for engaging the leaves of the book.

In testimony whereof, I hereunto affix my signature.

A. McL. CHALMERS.