April 28, 1970 G. D. AULISA 3,508,582

SELECTIVE COUPLING APPARATUS

Filed March 11, 1968

FIG. 1.

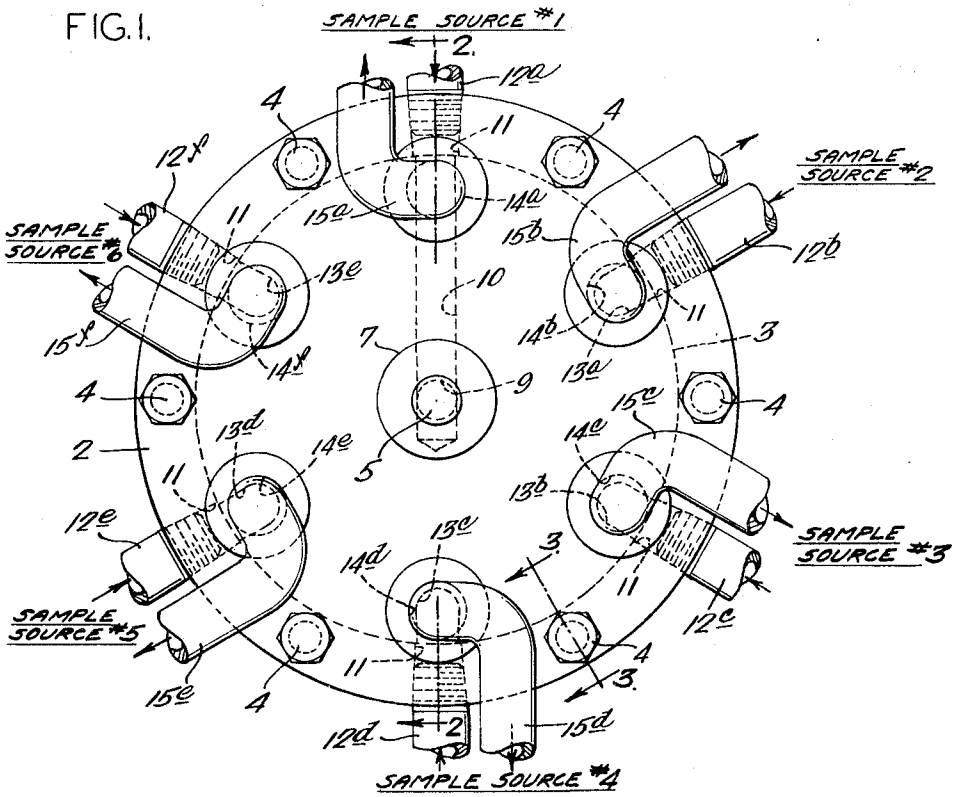

FIG. 2.

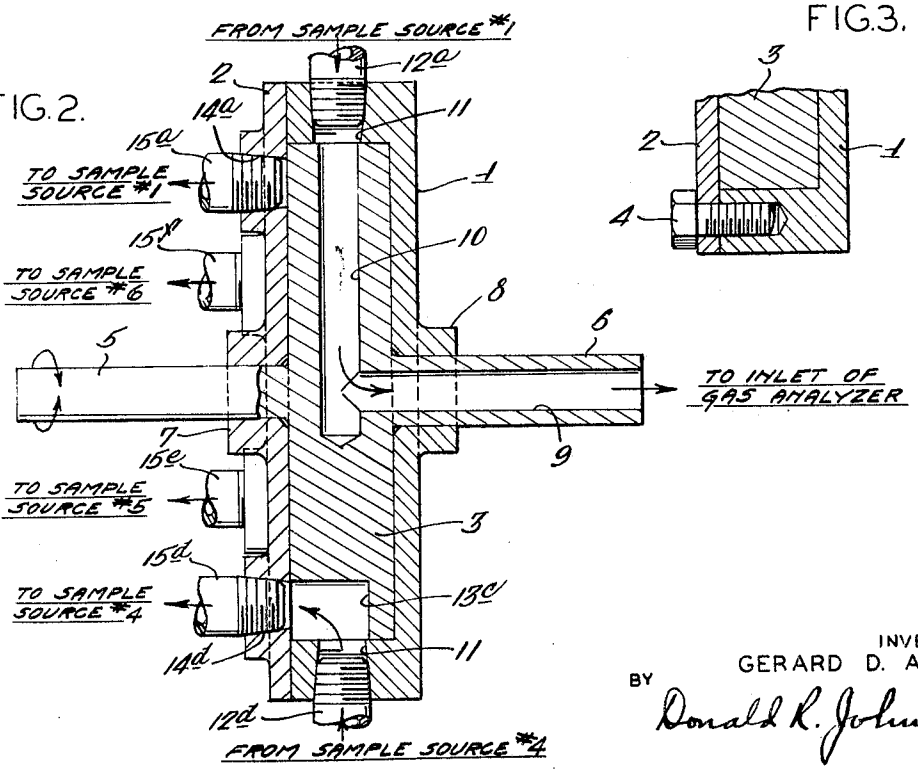

FIG. 3.

INVENTOR:
GERARD D. AULISA

BY Donald R. Johnson
ATTY.

United States Patent Office 3,508,582 Patented Apr. 28, 1970

3,508,582

SELECTIVE COUPLING APPARATUS

Gerard D. Aulisa, Claymont, Del., assignor to Sun Oil Company, Philadelphia, Pa., a corporation of New Jersey

Filed Mar. 11, 1968, Ser. No. 712,274
Int. Cl. F16k 11/00
U.S. Cl. 137—625.11 2 Claims

ABSTRACT OF THE DISCLOSURE

A rotor mounted inside a casing successively couples individual ones of a plurality of inlet openings to a single outlet opening. In each position of the rotor, all of the inlet openings, except the one then coupled to the outlet opening, are coupled to individual bypass openings provided in the casing.

This invention relates to a selective coupling apparatus, and more particularly to an apparatus of this character for separately and successively coupling individual ones of a plurality of inlets to a single outlet. A typical use of the apparatus of this invention is in conjunction with a gas analyzer, wherein it is desired to connect the inlet of the analyzer separately and successively to individual ones of a plurality of conduits each carrying a sample which is to be analyzed. For this use, the analyzer inlet would be connected to the outlet of the coupling apparatus of this invention, while each of the sample conduits would be connected to a respective inlet of the coupling apparatus.

It is desirable, particularly when the samples carried by the conduits are in the form of drag streams taken from fluid flow lines, that there be essentially no interruption in the flows of these drag streams. Also, it is highly desirable to avoid any intermixing of the several drag streams. These desiderata are achieved in the coupling apparatus of the present invention by providing a bypassing arrangement which is adapted to individually return the flow moving to each of the selective coupling apparatus inlets, except to the inlet which is at the time coupled to the coupling apparatus outlet (i.e., to the analyzer inlet) back to the source of such flow (i.e., back to the respective sample-carrying conduit).

A detailed description of the invention follows, taken in conjunction with the accompanying drawing, wherein:

FIG. 1 is a face view of the selective coupling apparatus of this invention, as used for selective coupling of sample sources to a gas analyzer;

FIG. 2 is a sectional view taken on line 2—2 of FIG. 1; and

FIG. 3 is a fragmentary cross-section taken on line 3—3 of FIG. 1.

Referring now to the drawing, a cup-shaped shell **1**, of cylindrical outer configuration, together with a disc-like cover plate **2** which closes the open end of the cup, provide a casing within which is mounted a rotor **3**. The cover plate **2** is held in assembled position on the shell **1** by means of six bolts **4** which are equiangularly-spaced around the circumference of a bolt circle centered at the center of plate **2**; these bolts pass through clearance holes in plate **2** and thread into tapped longitudinally-extending holes provided in the upstanding outer annular wall of shell **1** (see FIG. 3). The O.D. of plate **2** is equal to the O.D. of shell **1**.

The rotor **3** is somewhat disc-like in shape with an O.D. slightly less than the I.D. of shell **1** and with a depth or thickness dimension slightly less than the inside depth of this shell; rotor **3** is mounted for free rotation within the casing provided by items **1** and **2**. Rotor **3** has two integral cylindrical extensions **5** and **6** which project outwardly axially from the disc portion of the rotor, at the two respective opposite faces thereof. Cylindrical extension **5** is a solid operating shaft which passes rotatably through the aperture provided in a central boss **7** formed on the outer surface of cover plate **2**; thus, at one side, rotor **3** is journaled in cover plate **2**. Shaft **5** extends outwardly beyond cover plate **2** for a distance sufficient to enable this shaft to be operated (rotated) in order to rotate rotor **3** within casing **1**, **2** about an axis which is the longitudinal axis of shaft **5**.

The diameter of cylindrical extension **6** is somewhat greater than that of shaft **5**. Extension **6** passes rotatably through the aperture provided in a central boss **8** formed on the outer surface of shell **1**; thus, at its other side, rotor **3** is journaled in shell **1**. Extensions **5** and **6** are preferably aligned longitudinally with each other. The extension **6** projects outwardly beyond shell **1** and has therein an axial hole **9** which opens to the outside of the casing **1**, **2** and provides an outlet opening for the coupling apparatus. This outlet opening in extension **6** (which extension thus furnishes a conduit) may be coupled through a rotatable coupling or slip joint (not shown) to the inlet of a suitable utilization device such as a gas analyzer (not shown). From its outer end (outside of the casing **1**, **2**), the axial hole **9** extends inwardly to the center of the disc portion of rotor **3**, where it communicates with the inner end of a radial bore **10** whose outer end opens into the periphery of the rotor. Thus, the bore **10** in rotor **3** is in constant communication with the outlet opening **9**.

A plurality of spaced inlet openings **11**, equal in number to the number of sample sources which are to be selectively (and successively) coupled to the outlet opening **9** (and thus to the inlet of the gas analyzer), are provided in the shell portion **1** of the casing **1**, **2**. The openings **11** extend radially through the upstanding outer annular wall of shell **1**, and are spaced equiangularly around this wall, with the center line of each opening **11** preferably bisecting the angle included between adjacent ones of the bolts **4**. The center lines of all of the openings **11** lie in a common plane, in which plane the center line of bore **10** also lies; therefore, as rotor **3** rotates (about the longitudinal axis of shaft **5**, which axis is perpendicular to said common plane), bore **10** comes into radial alignment with (and thus into communication with) successive ones of the inlet openings **11**. That is to say, bore **10** successively communicates with the inlet openings **11** as the rotor **3** rotates. Thus, as rotor **3** rotates, the inlet openings **11** are successively coupled to the outlet opening **9**, by means of the bore **10**.

By way of example, six inlet openings **11** are illustrated in FIG. 1. Each inlet opening **11** has mounted therein a threaded connector (see FIG. 2), by means of which the ends of respective pipes or tubes may be secured in the inlet openings **11**. Each of the said pipes or tubes conveys a gaseous sample from a respective sample source to a corresponding inlet opening **11**. Thus, one end of pipe **12***a* is secured in the inlet opening **11** at the twelve o'clock position (FIG. 1), and the opposite end of this pipe is connected to sample source #**1**, so as to convey sample therefrom to the corresponding inlet opening. One end of pipe **12***b* is secured in the inlet opening **11** at the two o'clock position, and the opposite end of this pipe is connected to sample source #**2**, so as to convey sample therefrom to the corresponding inlet opening. One end of pipe **12***c* is secured in the inlet opening **11** at the four o'clock position, and the opposite end of this pipe is connected to sample source #**3**, so as to convey sample therefrom to the corresponding inlet opening. One end of pipe **12***d* is secured in the inlet opening **11** at the six o'clock position, and the opposite end of this pipe is connected to sample source #**4**,

so as to convey sample therefrom to the corresponding inlet opening. One end of pipe **12***e* is secured in the inlet opening **11** at the eight o'clock position, and the opposite end of this pipe is connected to sample source #**5**, so as to convey sample therefrom to the corresponding inlet opening. One end of pipe **12***f* is secured in the inlet opening **11** at the ten o'clock position, and the opposite end of this pipe is connected to sample source #**6**, so as to convey sample therefrom to the corresponding inlet opening. Thus, it may be seen that in the illustrated position of the rotor **3**, sample source #**1** is coupled to the outlet opening **9** (and thus to the inlet of the gas analyzer); as rotor **3** rotates in the clockwise direction in FIG. 1 to successive rotational positions spaced at intervals of 60°, sample sources #**2**, #**3**, #**4**, #**5**, and #**6** are successively coupled to the outlet opening **9** (and thus to the inlet of the gas analyzer).

According to this invention, in each rotational position of the rotor **3**, bypass relief for each of the inlet openings **11** not being sampled in that position (i.e., for each inlet opening which is not then coupled to outlet opening **9**) is provided, the bypass relief preferably returning the flow of each inlet opening not then being sampled individually back to its source. The bypassing arrangement will now be described.

Rotor **3** has in its periphery a plurality of longitudinally-extending slots **13***a* through **13***e* which are U-shaped in cross-section, the number of these slots being one less than the number of inlet openings **11**. Since six inlet openings **11** are illustrated, there would be five slots **13***a*–**13***e*. The first slot **13***a* is located 60° around the circumference of rotor **3** from the center line of bore **10** in one direction (clockwise in FIG. 1), and the fifth or last slot **13***e* is located 60° around from the center line of bore **10** in the other or counterclockwise direction. The slots **13***a*–**13***e* themselves are located at 60° intervals around the circumference of rotor **3**. Therefore, in each rotational position of rotor **3**, bore **10** will be radially aligned with a particular one of the inlet openings **11**, while each of the five slots **13***a*–**13***e* will be aligned with a respective one of the remaining five inlet openings. Thus, in the rotor position illustrated in FIG. 1, bore **10** is radially aligned with the twelve o'clock inlet opening **11** (pipe **12***a*, sample source #**1**), slot **13***a* is aligned with the two o'clock opening **11** (pipe **12***b*, source #**2**), slot **13***b* is aligned with the four o'clock opening **11** (pipe **12***c*, source #**3**), slot **13***c* is aligned with the six o'clock opening **11** (pipe **12***d*, source #**4**), slot **13***d* is aligned with the eight o'clock opening **11** (pipe **12***e*, source #**5**), and slot **13***e* is aligned with the ten o'clock opening **11** (pipe **12***f*, source #**6**).

Each of the slots **13***a*–**13***e* extends from that face of rotor **3** which is adjacent cover plate **2** toward the opposite face thereof, for a distance sufficient for its inner end to come into substantially unrestricted communication with the respective inlet openings **11** (see FIG. 2); these slots terminate short of that face of rotor **3** which is adjacent the disc end of shell **1**. Thus, the inner end of each of the rotor slots **13***a*–**13***e* (which form passages in the rotor, when the latter is within casing **1**, **2**) is adapted to communicate with a separate one of the inlet openings **11**.

A plurality of spaced bypass openings **14***a*–**14***f*, one for each respective one of the six inlet openings **11**, are provided in cover plate **2**. These bypass openings are cylindrical and are spaced equiangularly around the circumference of a base circle centered at the center of plate **2** (axis of shaft **5**) and having a diameter such that said circle passes through the centers of curvature of the curved ends of slots **13***a*–**13***e*. Each of the openings **14***a*–**14***f* is aligned radially with a respective one of the inlet openings **11** and pipes **12***a*–**12***f* (see FIG. 1). The outer end of each of the rotor slot-passages **13***a*–**13***e* is adapted to communicate with a separate one of the bypass openings **14***a*–**14***f*.

The inner ends of individual conduits or pipes **15***a*–**15***f* are sealed to the outer surface of cover plate **2**, one at each of the respective bypass openings **14***a*–**14***f* so as to communicate respectively with the outer ends of these bypass openings. These pipes extend to respective ones of the sample sources. Thus, one end of pipe **15***a* is sealed to the bypass opening **14***a* and the opposite end of this pipe is coupled back into sample source #**1**, downstream from the point at which pipe **12***a* is connected to this source; one end of pipe **15***b* is sealed to the bypass opening **14***b* and the opposite end of this pipe is coupled back into sample source #**2**, downstream from the point at which pipe **12***b* is connected to this source; one end of pipe **15***c* is sealed to the bypass opening **14***c* and the opposite end of this pipe is coupled back into sample source #**3**, downstream from the point at which pipe **12***c* is connected to this source; one end of pipe **15***d* is sealed to the bypass opening **14***d* and the opposite end of this pipe is coupled back into sample source #**4**, downstream from the point at which pipe **12***d* is connected to this source; one end of pipe **15***e* is sealed to the bypass opening **14***e* and the opposite end of this pipe is coupled back into sample source #**5**, downstream from the point at which pipe **12***e* is connected to this source; one end of pipe **15***f* is sealed to the bypass opening **14***f* and the opposite end of this pipe is coupled back into sample source #**6**, downstream from the point at which pipe **12***f* is connected to this source.

In each rotational position of the rotor **3**, one of the six inlet openings **11** (and thus, one of the sample sources) is coupled to the outlet opening **9** (and thus to the gas analyzer inlet), and each of the remaining five inlet openings (and thus, each of the five remaining sample sources) is coupled to a respective one of the bypass openings **14***a*–**14***f* (and thus, back to the respective sample source). Thus, in the illustrated position of rotor **3**, the flow in sample source #**1** is fed to outlet opening **9**, by way of pipe **12***a* and rotor bore **10**; the flow in sample source #**2** is bypassed back to this same source by way of pipe **12***b*, rotor slot-passage **13***a*, bypass opening **14***b*, and pipe **15***b*; the flow in sample source #**3** is bypassed back to this same source, by way of pipe **12***c*, rotor slot-passage **13***b*, bypass opening **14***c*, and pipe **15***c*; the flow in sample cource #**4** is bypassed back to this same source, by way of pipe **12***d*, rotor slot-passage **13***c*, bypass opening **14***d*, and pipe **15***d*; the flow in sample source #**5** is bypassed back to this same source, by way of pipe **12***e*, rotor slot-passage **13***d*, bypass opening **14***e*, and pipe **15***e*; the flow in sample source #**6** is bypassed back to this same source, by way of pipe **12***f*, rotor slot-passage **13***e*, bypass opening **14***f*, and pipe **15***f*.

Assuming the rotor **3** rotates 60° clockwise (viewed as in FIG. 1) from the rotational position illustrated to its next rotational position, in such next position sample source #**2** would be coupled to the gas analyzer inlet by way of rotor bore **10** and the coupling apparatus outlet opening **9**, and sample sources #**1**, #**3**, #**4**, #**5**, and #**6** would be individually bypassed back to the same respective sources, by way of the respective slot-passages **13***e*, **13***a*, **13***b*, **13***c*, and **13***d*, and bypass openings **14***a*, **14***c*, **14***d*, **14***e*, and **14***f*.

The invention claimed is:

1. Coupling apparatus comprising in combination, a casing, said casing having a first set of spaced inlet openings therein and also having therein a second set of spaced and separate bypass openings, one for each respective one of said inlet openings; a rotor in said casing, said rotor having a portion thereof extending outside of said casing and having in said portion an outlet opening, there being a bore in said rotor in constant communication with said outlet opening and adapted in the rotation of the rotor to successively communicate with said inlet openings; said rotor also having therein a set of passages isolated from each other and numbering one less than the number

of inlet openings, each such passage being adapted to communicate at one end with solely a separate one of said inlet openings and at its other end with solely the corresponding one of said bypass openings, the arrangement being such that in each rotational position of said rotor one of said inlet openings communicates by way of said bore with said outlet opening and each of the remaining inlet openings communicates by way of a respective one of said passages with solely its corresponding bypass opening.

2. Apparatus according to claim 1, wherein said casing is of cylindrical outer configuration, wherein said inlet openings extend radially of said casing and are equi-

angularly-spaced, and wherein said bypass openings extend in the longitudinal direction and are distributed equiangularly around a circle centered on the casing longitudinal axis.

References Cited

UNITED STATES PATENTS

2,821,998	2/1958	Mayhew	137—625.11
2,835,273	5/1958	McDonald	137—625.11
2,840,109	6/1958	Wadleigh	137—625.11
2,996,083	8/1961	Huska	137—625.11

ROBERT R. MACKEY, Primary Examiner