P. ROGER.

MENSTRUAL BANDAGE OR CATAMENIAL SACK.

APPLICATION FILED APR. 1, 1916.

1,233,811.

Patented July 17, 1917.

2 SHEETS—SHEET 1.

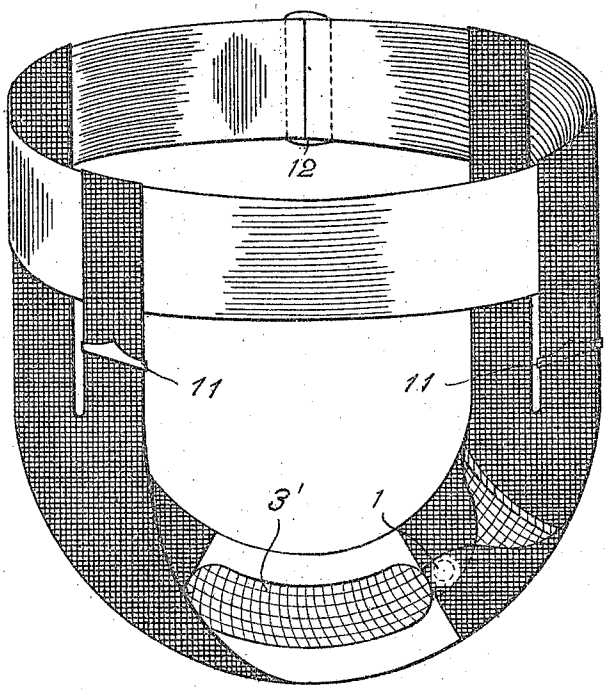


Fig. 1.

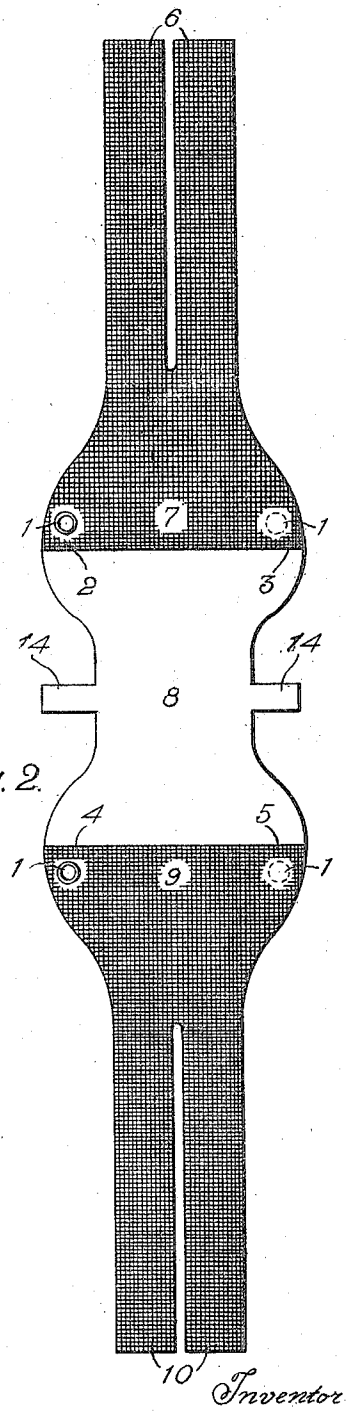


Fig. 2.

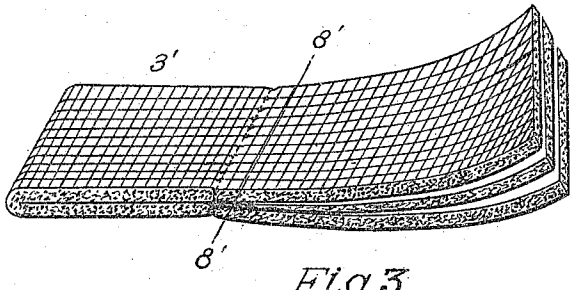


Fig. 3.

Inventor

Peter Roger

P. ROGER.

MENSTRUAL BANDAGE OR CATAMENIAL SACK.

APPLICATION FILED APR. 1, 1916.

1,233,811.

Patented July 17, 1917.

2 SHEETS—SHEET 2.

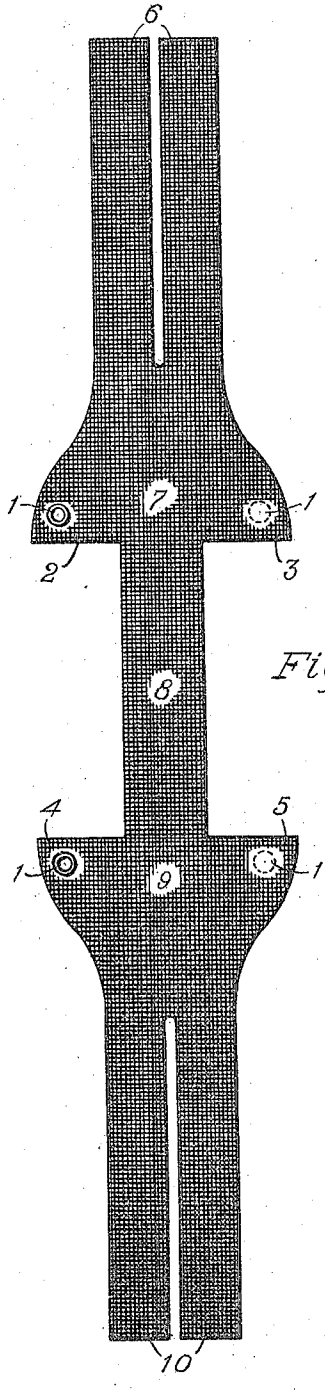


Fig. 4.

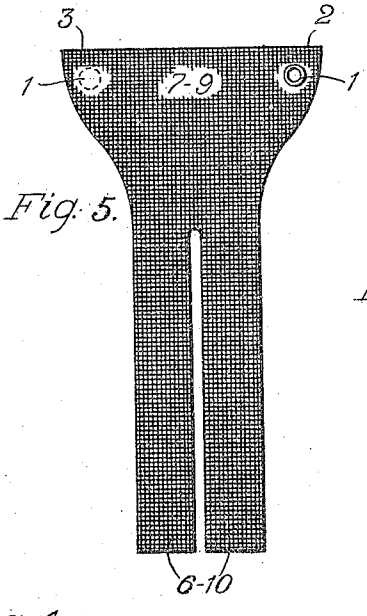


Fig. 5.

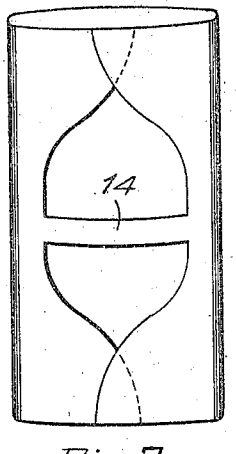


Fig. 7.

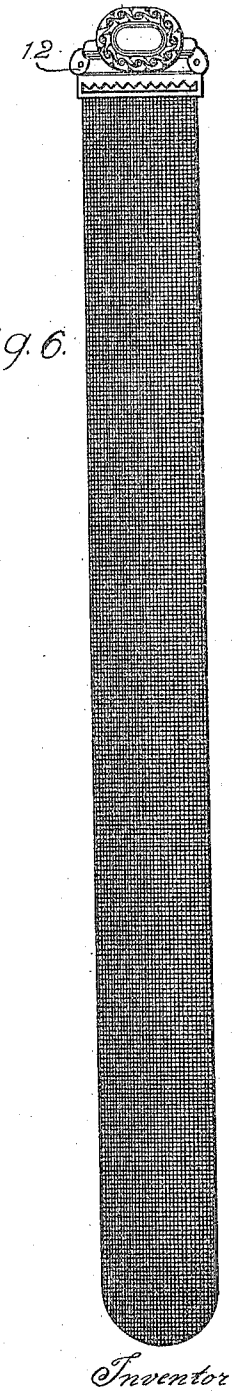


Fig. 6.

Inventor
Peter Roger

# UNITED STATES PATENT OFFICE.

PETER ROGER, OF MILFORD, MASSACHUSETTS.

## MENSTRUAL BANDAGE OR CATAMENIAL SACK.

1,233,811. Specification of Letters Patent. Patented July 17, 1917.

Application filed April 1, 1916. Serial No. 88,235.

*To all whom it may concern:*

Be it known that I, PETER ROGER, a citizen of the United States, resident of Milford, county of Worcester, and State of Massachusetts, have invented certain new and useful Improvements in Menstrual Bandages or Catamenial Sacks; and I do hereby declare the following to be a full, clear, and exact description of the invention, such as will enable others skilled in the art to which it appertains to make and use the same.

This invention relates to improvements in menstrual bandages or catamenial sacks consisting in a sack made of soft rubber and pink-colored satin or other suitable material, and a belt, made of the same cloth, which holds the bandage properly fitted to the body.

And the object of this invention is to provide a sanitary, comfortable, and economic menstrual bandage; as the menstrual discharges are absorbed by a properly fitted pad made of antiseptic cotton or other sanitary absorbent and enveloped with linen gauze. The said pad prevents the soiling of the under-clothes and the unpleasant feeling of the menstrual discharges; as the pad, when moistened, is easily removed and replaced with a clean one; hence, comfort and cleanness may be enjoyed by the use of this menstrual bandage.

With the foregoing and other objects in view my invention consists in such novel features and combinations of parts as will be hereinafter more fully described and illustrated in the accompanying drawings, and claimed.

In describing the invention in detail, reference will be had to the accompanying drawings, which are part of the specification, wherein like figures of reference indicate like or corresponding parts throughout the several views, which are all taken in perspective, and in which,

Figure 1 is a view of the menstrual bandage fitted to the belt;

Fig. 2 is a view of the bandage with the rubber-sack when fully distended;

Fig. 3 is a view of the antiseptic absorbent pad;

Fig. 4 is a view of the front part of the menstrual bandage in which the strap 7—8—9 which supports the rubber-sack is shown;

Fig. 5 is a view of the inner part or lining of the bandage between which and the front part, the rubber-sack is stitched;

Fig. 6 is a view of the belt by which the menstrual bandage is fitted to the body; and

Fig. 7 is a view of the rubber-sack as it looks when its lateral edges are folded together.

Referring more particularly to the drawings, 1 designates a metal snap secured to each edge and opposite side of the curved or bulb-shaped edges of the bandage, to the base of which the rubber-sack is stitched; for these snaps buttons may be substituted; which snaps or buttons when fitted together compel the lateral edges of the rubber to fold up, which foldings form the sack; when the removal of the pad from the sack is necessary, the said edges should be unbuttoned.

The middle strap 7—8—9, has square-like cut at the base of the curved or bulb-shaped edges of the bandage, which strap supports the rubber-sack which prevents any excessive longitudinal dilatation or stretchings and imparts a great deal of durability.

The anterior and the posterior parts of the bandage, from the base of the curved edges up to the ends of the bands 6 and 10, are lined with colored percaline to match the satin; the cut of which is shown in Fig. 5. The said bands are fitted with slide-buckles 11, which prevent said bands from slipping from the belt when the bandage is being used. Safety-pins or buttons may be used in lieu of buckles; but I prefer to use the former fastening means, this being a very easy and quick one, particularly when, for natural emergency, a prompt removal of the bands is required. 2—3 and 4—5, designate the two edges of the cloth between which the ends of the rubber-sack are inserted and secured thereto.

The position of the pad as it would appear when set within the rubber-sack is shown at 3′ of Fig. 1.

The pad which collects the menstrual discharge is made of antiseptic cotton or any other sanitary absorbent and covered with linen gauze. The rubber-sack and the pad, when it is to be used, is enveloped with muslin cloth, which shielding obviates the chafing commonly produced by the rubber.

The belt which supports the menstrual bandage is made of satin or any other suit-

able material and is lined with percaline, which belt is fitted with a slide-buckle 12, with which the bandage is properly secured and fitted to the body; for said buckle there may be substituted any other fastening means, as buttons or safety-pins.

It is to be understood that the construction disclosed herein is illustrative but not restrictive and that the same may be modified within the meanings and scope of the claims which follow.

Having so described my invention, what I claim as new, and desire to secure by Letters Patent is:

1. A menstrual bandage made of any suitable material with a longitudinal strap in its middle part and two flaps in the anterior and the posterior parts and said flaps fitted with slide-buckles, a rubber-sack embodied between the layers of cloth in the base of the curved edges of the menstrual bandage which rubber-sack has reversible edges laterally and a transverse strap in its middle part which secures the absorbent pad therein and prevents the displacement of same, and an absorbent pad made of antiseptic material which collects the menstrual discharge and said pad properly adjusted and secured within the rubber-sack, and means to support the menstrual bandage properly fitted to the body.

2. A menstrual bandage made of any suitable material with a longitudinal strap in its middle part and two flaps in the anterior and the posterior parts and said flaps fitted with slide-buckles, a rubber-sack embodied between the layers of cloth in the base of the curved edges of the bandage which rubber-sack has reversible edges laterally and a transverse strap in its middle part which secures the absorbent pad therein and prevents the displacement of same, an absorbent pad made of antiseptic material which collects the menstrual discharge and said pad properly adjusted and secured within the rubber-sack, and a belt made of any suitable material and lined which belt is fitted with a slide-buckle and said belt supports the menstrual bandage properly fitted to the body.

In testimony thereof I have hereunto affixed my signature.

PETER ROGER.

Copies of this patent may be obtained for five cents each, by addressing the "Commissioner of Patents. Washington, D. C."