Aug. 12, 1952 H. E. RUCKS 2,606,605

ATTACHMENT FOR SUPPORTING A CHEMICAL DECARBONIZER OR DESOOTER IN A POT-TYPE OIL BURNING SPACE HEATER OR FURNACE

Filed Feb. 14, 1950

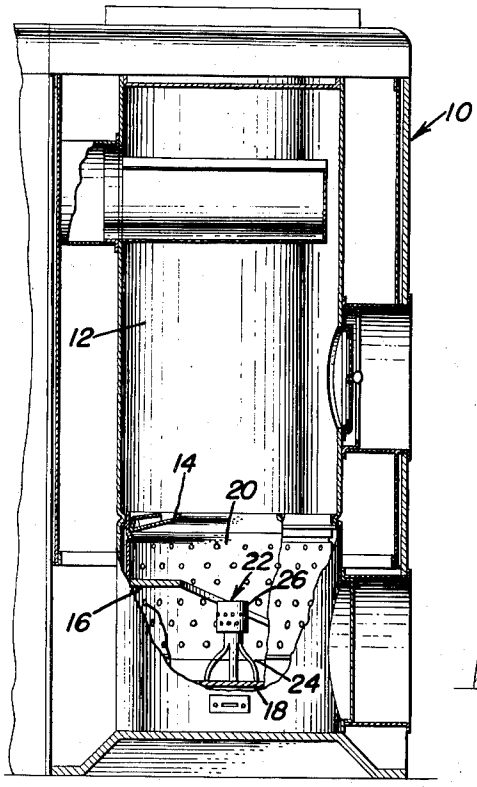

Fig. 1

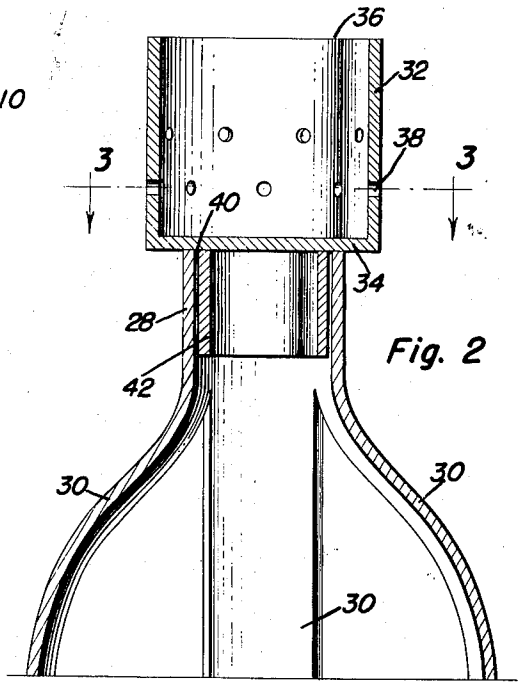

Fig. 2

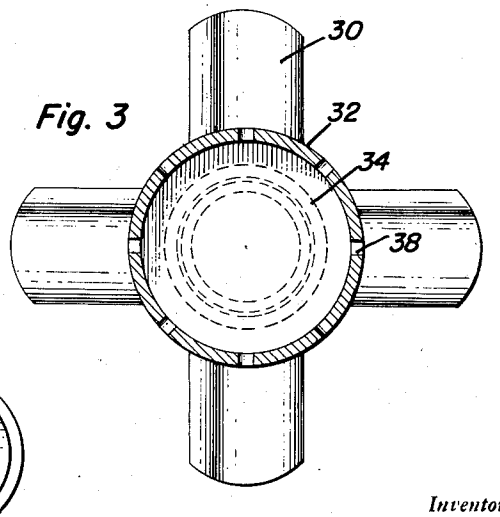

Fig. 3

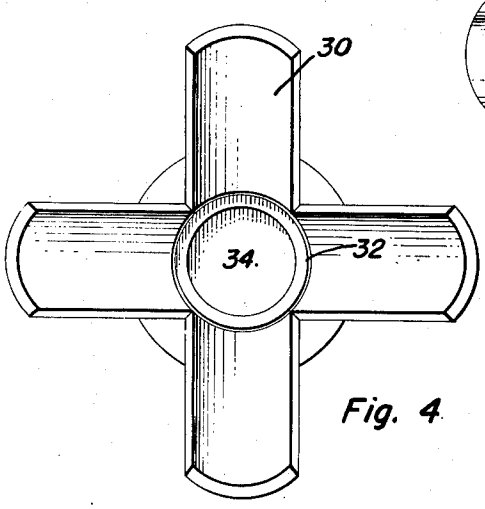

Fig. 4

Inventor

Henry E. Rucks

By Clarence A. O'Brien and Harvey B. Jacobson

Attorneys

Patented Aug. 12, 1952

2,606,605

UNITED STATES PATENT OFFICE

2,606,605

ATTACHMENT FOR SUPPORTING A CHEMICAL DECARBONIZER OR DESOOTER IN A POT-TYPE OIL BURNING SPACE HEATER OR FURNACE

Henry E. Rucks, Augusta, Wis.

Application February 14, 1950, Serial No. 144,146

1 Claim. (Cl. 158—91)

1

This invention relates to a device for retaining and supporting a chemical de-sooting and decarbonizing composition within the pot burner of a space heater or furnace.

The primary object of this invention is to provide a support for removably retaining a decarbonizing composition within a space heater beneath the flame thereof which will eliminate the carbon and soot formed in the interior of all types of pot oil burners. It is well known by people skilled in this art that the deposition of carbon and soot in the interior of pot type oil burners produces a heat insulation which materially reduces the efficiency of the oil burner.

Another important object of this invention is to provide a device of the character described which is so positioned within the pot of the oil burner that the flame will not come into direct contact with the chemical allowing the same to produce a gas that will cause the deposited carbon to shrink and break with the result that the carbon will fall to the bottom of the pot in chunks. This will keep the vents in the pot of the oil burner open and always allow the right amount of air to enter and mix with the gas that is formed from the oil when it is hot and in use. This will also eliminate oil burner explosions that are usually caused when the vents of the pot become sealed with carbon. As a result, the oil burner will burn smoothly and freely inasmuch as it will always take an ample supply of air.

Another object of the invention is to provide a device for supporting a chemical to desoot and decarbonize, which will prevent piling up of used desooting chemical, as would happen if it were thrown in the pot of an oil burner. Such piling up of used chemical will not allow the oil to flow in the pot and spread on the bottom as it should and thereby not allowing the oil burner to operate as efficiently as it was meant to do. In time the burner will not burn at all as no oil can enter the pot, which then means used chemical must be removed, which is very hard to do. The desooting chemical will burn fast to the bottom of the pot like a hard carbon. By using the decarbonizer one eliminates all this plus the accidents that often occur when a desooting chemical is thrown in a lighted oil burner, caused from the instant burning of such chemical. Directions given with desooting chemicals instruct user to use in the above manner.

These together with various ancillary objects and features of the invention which will later become apparent as the following description

2

proceeds, are attained by the device, a preferred embodiment of which has been illustrated by way of example only in the accompanying drawings, wherein:

Figure 1 is an elevational view of the present device shown positioned within the pot of an oil burning space heater, the latter being broken away to show details of construction;

Figure 2 is a vertical sectional view through the device;

Figure 3 is a sectional view taken substantially on the plane of section line 3—3 of Figure 2; and

Figure 4 is a bottom plan view of the device.

Specific reference is now made to the drawings. In the several views in the accompanying drawings and in the following specification similar reference characters indicate corresponding elements throughout.

Indicated generally at 10 is a conventional pot type oil burning space heater having a flame receiving chamber 12 supported on the upper edge 14 of a pot burner 16, the latter being provided with a bottom wall 18 and an apertured side wall 20 as will be readily understood by those skilled in the art. In the normal operation of this type of space heater, the flames are confined within the chamber 12 and emanate from the pot 16 adjacent the upper edge 14 thereof. The device of the instant invention is indicated at 22 and is adapted to be supported upon the bottom wall 18 of the pot 16 in a manner to be more fully described hereinafter.

The present device or attachment consists essentially of two removable elements namely, the stand 24 and the decarbonizer cup 26. Both of these elements are preferably fabricated of stainless steel or other strong, corrosion-resisting metal.

The stand 24 includes a tubular collar 28 which is hollow throughout its length and integral with this collar and depending therefrom is a plurality of circumferentially spaced, arcuated legs 30 which are adapted to rest upon the bottom wall 18 of the pot 16, as will be clearly seen in Figure 1.

The decarbonizing cup 26 is a substantially cylindrical member which is tubular or hollow having a side wall 32 and a bottom wall 34. The cup is open at its upper end as at 36 allowing for free access to the interior thereof. The wall 32 of the cup is further provided adjacent the bottom wall 34 with a plurality of circumferentially spaced vents or apertures 38 for a purpose to be later described. Secured centrally to the bottom wall 34, as by soldering, welding or

the like 40, is a tubular lug 42 which is of smaller diameter than the collar portion 28 of the stand and which is therefore loosely received therein, the remainder of the bottom wall 34 of the cup acting as a flange for supporting the cup on the upper edge of the collar portion 28 as shown clearly in Figure 2.

Any desooting compound may be placed in the cup and supported on the bottom wall 34 thereof, the overall length of the stand and the cup being such that the decarbonizing cup is substantially below the flame in any pot type oil burner. It has been found that a decarbonizing composition containing sodium chloride, potassium chloride, lead chloride, iron oxide, zinc oxide, borax, and sand may be used as a decarbonizer and contains constituents which are slowly vaporizable and will last approximately two weeks, thus producing the desired desooting results.

In use, the cup is assembled upon the stand in a manner which will be obvious from the drawings and the cup and stand are positioned on the bottom wall 18 of the pot 16, preferably in the center thereof, the length being such that the cup is well beneath the flame in the space heater 10. A suitable decarbonizing composition is placed in the cup to rest upon the bottom wall 34 thereof and the hot gases in the pot 16 will pass between the supporting legs 30 and up through the collar and tubular lug 42 to heat the outer surface of the bottom wall 34 of the cup and in turn heat the decarbonizing composition therein. This will vaporize some constituents of the composition which will not only escape from the open end 36 of the cup but also from the vents 38 in the side wall adjacent the bottom thereof, which vapors will effectively cause the deposit of hard carbon to shrink, break and then fall to the bottom of the pot in chunks thereby keeping the vents in the pot open to allow a steady flow of the right amount of air to enter

and mix with the gas that is formed from the oil.

In view of the foregoing description taken in conjunction with the accompanying drawings it is believed that a clear understanding of the device will be quite apparent to those skilled in this art. A more detailed description is accordingly deemed unnecessary.

It is to be understood, however, that even though there is herein shown and described a preferred embodiment of the invention the same is susceptible to certain changes fully comprehended by the spirit of the invention as herein described and within the scope of the appended claim.

Having described the invention, what is claimed as new is:

In a space heater, a pot burner including a base and means therein forming a flame outlet, a stand having a tubular collar and spaced depending legs resting upon said base, a cylindrical cup including an annular wall and a bottom wall for retaining a chemical decarbonizer having vaporizable ingredients, a tubular lug secured centrally to said bottom wall and of smaller diameter than that of the bottom wall, said tubular lug being loosely received in said collar, and circumferentially spaced vents provided in said annular wall of said cup adjacent said bottom wall, said stand and cup being positioned below said means forming a flame outlet.

HENRY E. RUCKS.

REFERENCES CITED

The following references are of record in the file of this patent:

UNITED STATES PATENTS

Number	Name	Date
704,669	Tucker	July 15, 1902
2,326,221	Hill	Aug. 10, 1943
2,368,356	Happe	Jan. 30, 1945