(12) INTERNATIONAL APPLICATION PUBLISHED UNDER THE PATENT COOPERATION TREATY (PCT)

(19) World Intellectual Property Organization
International Bureau

(43) International Publication Date
10 February 2022 (10.02.2022)

WIPO | PCT

(10) International Publication Number
WO 2022/031362 A1

(51) International Patent Classification: *A61N 1/40* (2006.01)

(21) International Application Number: PCT/US2021/036128

(22) International Filing Date: 07 June 2021 (07.06.2021)

(25) Filing Language: English

(26) Publication Language: English

(30) Priority Data:
16/984,486 04 August 2020 (04.08.2020) US

(71) Applicant: **OJAI RETINAL TECHNOLOGY, LLC** [US/US]; 10580 Wilshire Blvd. #88, Los Angeles, California 90024 (US).

(72) Inventors: **LUTTRULL, Jeffrey K.**; 10580 Wilshire Blvd. #88, Los Angeles, California 90024 (US). **CHANG, David B.**; 14212 Livingston, Tustin, California 92780 (US).

(74) Agent: **KELLEY, Scott W.**; Kelly & Kelley, LLP, 6320 Canoga Avenue, Suite 1650, Woodland Hills, California 91367 (US).

(81) Designated States *(unless otherwise indicated, for every kind of national protection available)*: AE, AG, AL, AM, AO, AT, AU, AZ, BA, BB, BG, BH, BN, BR, BW, BY, BZ, CA, CH, CL, CN, CO, CR, CU, CZ, DE, DJ, DK, DM, DO, DZ, EC, EE, EG, ES, FI, GB, GD, GE, GH, GM, GT, HN, HR, HU, ID, IL, IN, IR, IS, IT, JO, JP, KE, KG, KH, KN, KP, KR, KW, KZ, LA, LC, LK, LR, LS, LU, LY, MA, MD, ME, MG, MK, MN, MW, MX, MY, MZ, NA, NG, NI, NO, NZ, OM, PA, PE, PG, PH, PL, PT, QA, RO, RS, RU, RW, SA, SC, SD, SE, SG, SK, SL, ST, SV, SY, TH, TJ, TM, TN, TR, TT, TZ, UA, UG, US, UZ, VC, VN, WS, ZA, ZM, ZW.

(84) Designated States *(unless otherwise indicated, for every kind of regional protection available)*: ARIPO (BW, GH, GM, KE, LR, LS, MW, MZ, NA, RW, SD, SL, ST, SZ, TZ, UG, ZM, ZW), Eurasian (AM, AZ, BY, KG, KZ, RU, TJ, TM), European (AL, AT, BE, BG, CH, CY, CZ, DE, DK, EE, ES, FI, FR, GB, GR, HR, HU, IE, IS, IT, LT, LU, LV, MC, MK, MT, NL, NO, PL, PT, RO, RS, SE, SI, SK, SM, TR), OAPI (BF, BJ, CF, CG, CI, CM, GA, GN, GQ, GW, KM, ML, MR, NE, SN, TD, TG).

Published:
— *with international search report (Art. 21(3))*

(54) Title: SYSTEM AND METHOD FOR PREVENTING OR TREATING ALZHEIMER'S AND OTHER NEURODEGENERATIVE DISEASES

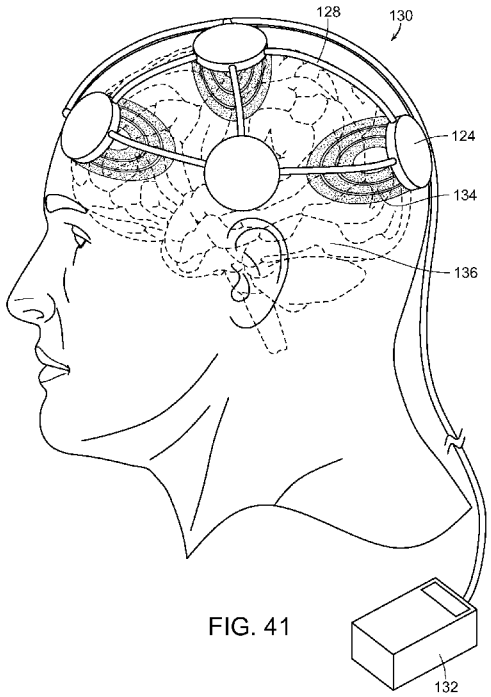

FIG. 41

(57) Abstract: A protective therapy system for biological tissues or fluids includes applying a pulsed energy source to a target tissue or a target fluid having a chronic progressive disease or a risk of having a chronic progressive disease to therapeutically or prophylactically treat the target tissue or target fluid. A pulsed energy source having selected energy parameters may be applied to a brain of an individual who has Alzheimer's or other neurodegenerative disease or is at risk of developing such a neurodegenerative disease so as to prevent or treat the neurodegenerative disease.

WO 2022/031362 A1

SYSTEM AND METHOD FOR PREVENTING OR TREATING ALZHEIMER'S AND OTHER NEURODEGENERATIVE DISEASES

DESCRIPTION

BACKGROUND OF THE INVENTION

[Para 1] The present invention generally relates to a system and process for treating biological tissues. More particularly, the present invention relates to a system and process for preventing or treating Alzheimer's and other neurodegenerative diseases.

[Para 2] Chronic progressive diseases (CPDs) currently, and increasingly in the future, are healthcare challenges. There are many such CPDs, including Type II Diabetes, Alzheimer's Disease, Idiopathic Pulmonary Fibrosis (IPF), heart disease and the like. There are many diseases for which the underlying cause is unknown, and which either have no treatment or suboptimal treatment. Some of these diseases are either uniformly terminal in short-order, or constitute major public health problems due to increasing at-risk populations and chronicity leading to epidemic increase in prevalence.

[Para 3] These diseases are both chronic and progressive. Chronic progressive diseases may have any number of underlying causes, including age, infectious, genetic, multi-factorial and immune. The progressive nature of these disorders implies that all worsen with age. While there are many different causes of CPDs, they share fundamental commonalities. A unifying feature of all CPDs is the

accumulation of abnormal intracellular proteins. Another common feature of all CPDs is increasing cellular and organ dysfunction, leading to failure. Yet another common and unifying feature of CPDs is cellular and organ dysfunction that causes and promotes chronic inflammation. These features of all CPDs create a vicious cycle leading to the disease worsening over time.

[Para 4] Thus, interruption of the cycle is essential to ameliorate the course of the disease. One approach to treatment of CPDs is gene therapy, which requires identification and repair or replacement of the defective gene that is the cause of the disease. However, for some CPDs, the gene defect is unknown. For others, there may be many potential gene defects which lead to the same disease. For example, retinitis pigmentosa can be caused by any of over 150 different genetic defects. This potential multiplicity of underlying defects makes gene therapy difficult.

[Para 5] Another approach to treatment of CPDs is drug therapy which typically attempts to target specific cellular proteins thought to be critical to the disease process to either inhibit or enhance their action. However, as there are an estimated 2,000 different protein types in the typical cell having 10^{680} potential interactions, finding successful, safe and clinically effective targeted drugs therapies without unacceptable side effects is difficult.

[Para 6] Another approach to treatment of CPDs is use of non-specific and anti-inflammatory treatments. These include various steroidal and non-steroidal anti-inflammatory agents and immunosuppressive drugs. However, anti-inflammatory drugs have many drawbacks in CPDs. As they do not address

the underlying cause of the disease, they must be used long-term and have limited effectiveness. Because of their modes of action and necessity of long-term use, the side effects and complications of treatment limit their usefulness. Immunosuppressive drugs have the same limitations as anti-inflammatory drugs. However, as they alter the normal function of the immune system apart from the disease process, they can cause further complications including other disease syndromes and neoplasia. Radiation therapy, such as using x-ray radiation, is another treatment for CPDs. It has effects similar to using anti-inflammatory and immunosuppressive drugs. However, it can also present more problematic side effects that worsen with time even after cessation of treatment, often making it unacceptable if long-term survival is anticipated.

[Para 7] Yet another, newer, approach to treatment of CPDs is identification and inhibitor of manager proteins. Such manager protein therapy attempts to address the problems presented by gene, drug, and anti-inflammatory/immunosuppression therapy by finding proteins or enzymes which are both key and common to several disease states, regardless of the underlying cause, and inhibiting them in various ways. As a single manager protein may be central to the development of a number of disease conditions, such as various and otherwise unrelated cancers, blocking this key protein could have wider therapeutic application than more disease-targeted therapies. However, manager protein therapy shares the general limitation of targeted drug therapy if the protein itself is targeted, with the additional problem common to targeted therapies of triggering compensatory mechanisms such as

up-regulation leading to permanent insensitivity to a drug action. Moreover, manager protein therapy shares the general limitations of gene therapy if the transcriptional and translational mechanisms that produce the protein are targeted. Although implicated in the disease process, such proteins virtually always have key roles in normal physiology which may lead to problems if inhibited generally or indiscriminately. Thus, such manager protein therapy also shares the problems targeted drug therapy has, as mentioned above.

[Para 8] Stem cell transplantation (SCT) is yet another approach to treatment of CPDs. SCT attempts to replace dead or dysfunctional tissue with new functional tissue by transplanting stem cells into the tissue or area surrounding the tissue. SCT is highly complex and expensive, with significant risks and adverse treatment effects. Despite much public interest, SCT has been thus far largely ineffective.

[Para 9] The current approaches described above for treatment of CPDs are of limited success and usefulness and thus most CPDs have either no treatment currently or only supportive, symptomatic, palliative or ineffectual treatment. These treatments are of limited success and usefulness by virtue of practical limitations, including unknown or multiple causes, cost, time, as well as non-physiologic (being unnatural and artificial) modes of action, which by definition, superimpose a new drug/intervention-induced disease state overlying the CPD. In light of this, the ideal treatment for CPDs would be independent of the underlying cause, physiologic, and thus both effective and well tolerated without side-effects, and able to break the vicious CPD cycle by intervening at

multiple points in the cycle including immediately distal to the primary defect for maximum effectiveness.

[Para 10] As mentioned above, Alzheimer's disease, and other neurodegenerative diseases, are chronic progressive diseases. For several decades, researchers have been attempting to find treatments or cures to Alzheimer's and other degenerative diseases, but with little success. It is believed that the potentially disease-modifying drugs which could arrest or reverse severe memory impairment and other such aspects of Alzheimer's and other degenerative diseases may not be effective as they have difficulty in crossing the blood-brain barrier and entering the brain's neurons.

[Para 11] In view of the inability of drugs to slow or reverse the cognitive impairment of Alzheimer's and other degenerative diseases thus far, other non-pharmaceutic interventions are warranted. Transcranial stimulation, such as using electromagnetic energy sources, including radiofrequency, has been found to enable treatment of tissue and fluids at the blood-brain barrier and beyond the barrier and into the tissues of the brain.

SUMMARY OF THE INVENTION

[Para 12] The present invention is directed to a system and method for preventing and treating chronic progressive diseases, including Alzheimer's and other degenerative diseases. In accordance with the present invention, it is determined that an individual has Alzheimer's or other degenerative disease or is at a risk of developing such a neurodegenerative disease. A pulsed

electromagnetic energy source comprising radiofrequency or microwave having selected energy parameters, including wavelength or frequency, duty cycle and pulse train duration is applied to the brain of the individual so as to prevent or treat the Alzheimer's or other degenerative disease. The pulsed electromagnetic energy may be directed to one or more of the leaky blood-brain barrier, inflamed portions of the brain, junk proteins of the brain, beta amyloid proteins of the brain, and/or tangled tau proteins of the brain.

[Para 13] The pulsed energy source parameters may be selected so as to raise a temperature of the treated tissue sufficiently to stimulate heat shock protein activation in the treated tissue or fluid. The energy parameters are selected so as to raise the target tissue or bodily target fluid temperature up to 11° C., typically between 6° C. to 11° C. at least during the application of the pulsed energy source to the target tissue or target fluid, to achieve a therapeutic or prophylactic effect. The average temperature rise of the tissue or target fluid over several minutes is maintained at or below a predetermined level so as to not permanently damage the target tissue or target fluid. For example, the average temperature rise of the target tissue or target fluid over several minutes may be maintained at 6° C. or less. More often, the average temperature rise of the target tissue or target fluid is maintained at approximately 1° C. or less over several minutes, such as over a six-minute period of time.

[Para 14] The radiofrequency may be between 3-6 megahertz (MHz), and has a duty cycle of between 2.5% to 5%, and a pulse train duration between 0.2 to

0.4 seconds. The radiofrequency may be generated with a device having a coil radii between 2 and 6 mm and between 13 and 57 amp turns.

[Para 15] The pulsed electromagnetic energy parameters may be selected and applied to the brain to cause resonant interactions within biomolecules within and around brain tissue. The pulsed energy parameters may be selected and applied to the brain so as to disrupt the structural integrity of the beta amyloid molecules. More particularly, the pulsed energy parameters may be selected so as to interact resonantly with the pi electron stacks in the beta amyloid and other biomolecules.

[Para 16] A plurality of spaced-apart radiofrequency emitters may be disposed adjacent to a head of an individual to be treated. The radiofrequency fields of the spaced-apart radiofrequency emitters preferably do not overlap. The power level of each emitter may be set so that a specific absorption rate in the brain is between 1.0 W/kg and 2.0 W/kg. Each emitter may transmit a radiofrequency field at 850-950 megahertz every 4 to 5 milliseconds.

[Para 17] The radiofrequency energy source may be applied to the brain at a given interval over a given period of time. For example, the radiofrequency may be applied to the brain for two spaced-apart one-hour treatment periods each day. This may occur over several days, weeks or even months.

[Para 18] Other features and advantages of the present invention will become apparent from the following more detailed description, taken in conjunction with the accompanying drawings, which illustrate, by way of example, the principles of the invention.

BRIEF DESCRIPTION OF THE DRAWINGS

[Para 19] The accompanying drawings illustrate the invention. In such drawings:

[Para 20] FIGURE 1 is a diagrammatic view illustrating a system used to generate a pulsed energy source in the form of a laser light beam, in accordance with the present invention;

[Para 21] FIGURE 2 is a diagrammatic view of optics used to generate a laser light geometric pattern, in accordance with the present invention;

[Para 22] FIGURE 3 is a diagrammatic view illustrating an alternate embodiment of the system to use to generate laser light beams for treating tissue and fluid, in accordance with the present invention;

[Para 23] FIGURE 4 is a diagrammatic view illustrating yet another embodiment of a system used to generate laser light beams to treat tissue in accordance with the present invention;

[Para 24] FIGURE 5 is a top plan view of an optical scanning mechanism, used in accordance with the present invention;

[Para 25] FIGURE 6 is a partially exploded view of the optical scanning mechanism of FIG. 5, illustrating various component parts thereof;

[Para 26] FIGURE 7 illustrates controlled offset of exposure of an exemplary geometric pattern grid of laser spots to treat a target tissue, in accordance with the present invention;

[Para 27] FIGURE 8 is a diagrammatic view illustrating a geometric object in the form of a line controllably scanned to treat a target tissue, in accordance with the present invention;

[Para 28] FIGURE 9 is a diagrammatic view similar to FIG. 8, but illustrating the geometric line or bar rotated to treat an area, in accordance with the present invention;

[Para 29] FIGURES 10 and 11 are graphs illustrating the average power of a laser source compared to a source radius and pulse train duration of the laser;

[Para 30] FIGURES 12 and 13 are graphs illustrating the time for the temperature for decay depending upon the laser source radius and wavelength;

[Para 31] FIGURES 14-17 are graphs illustrating peak ampere turns for various radiofrequencies, duty cycles and coil radii;

[Para 32] FIGURE 18 is a graph depicting the time for temperature rise to decay compared to radiofrequency coil radius;

[Para 33] FIGURES 19 and 20 and graphs depicting the average microwave power compared to microwave frequency and pulse train duration;

[Para 34] FIGURE 21 is a graph depicting the time for the temperature to decay for various microwave frequencies;

[Para 35] FIGURE 22 is a graph depicting the average ultrasound source power compared to frequency and pulse train duration;

[Para 36] FIGURES 23 and 24 are graphs depicting the time for temperature decay for various ultrasound frequencies;

[Para 37] FIGURE 25 is a graph depicting the volume of focal heated region compared to ultrasound frequency;

[Para 38] FIGURE 26 is a graph comparing equations for temperature over pulse durations for an ultrasound energy source;

[Para 39] FIGURES 27 and 28 are graphs illustrating the magnitude of the logarithm of damage and HSP activation Arrhenius integrals as a function of temperature and pulse duration;

[Para 40] FIGURE 29 is a diagrammatic view of a light generating unit that produces timed series of pulses, having a light pipe extending therefrom, in accordance with the present invention;

[Para 41] FIGURE 30 is a cross-sectional view of a photostimulation delivery device delivering electromagnetic energy to target tissue, in accordance with the present invention;

[Para 42] FIGURE 31 is a cross-sectional and diagrammatic view of an end of an endoscope inserted into the nasal cavity and treating tissue therein, in accordance with the present invention;

[Para 43] FIGURE 32 is a diagrammatic and partially cross-sectioned view of a bronchoscope extending through the trachea and into the bronchus of a lung and providing treatment thereto, in accordance with the present invention;

[Para 44] FIGURE 33 is a diagrammatic view of a colonoscope providing photostimulation to an intestinal or colon area of the body, in accordance with the present invention;

[Para 45] FIGURE 34 is a diagrammatic view of an endoscope inserted into a stomach and providing treatment thereto, in accordance with the present invention;

[Para 46] FIGURE 35 is a partially sectioned perspective view of a capsule endoscope, used in accordance with the present invention;

[Para 47] FIGURE 36 is a diagrammatic view of a pulsed high intensity focused ultrasound for treating tissue internal the body, in accordance with the present invention;

[Para 48] FIGURE 37 is a diagrammatic view for delivering therapy to the bloodstream of a patient, through an earlobe, in accordance with the present invention;

[Para 49] FIGURE 38 is a cross-sectional view of a stimulating therapy device of the present invention used in delivering photostimulation to the blood, via an earlobe, in accordance with the present invention;

[Para 50] FIGURE 39 is a diagrammatic and perspective view of a device for treating multiple areas or an entire body of an individual, in accordance with the present invention;

[Para 51] FIGURE 40 is a diagrammatic perspective view of a plurality of spaced-apart radiofrequency emitters disposed adjacent to a head of an individual to be treated; and

[Para 52] FIGURE 41 is a diagrammatic view illustrating the emitters emitting electromagnetic energy into the head and brain of the individual, in accordance with the present invention.

DETAILED DESCRIPTION OF THE PREFERRED EMBODIMENTS

[Para 53] The present invention, as more fully described and illustrated herein, resides in processes and systems that provides protective therapy for biological tissues or fluids having a chronic progressive disease or at a risk of having a chronic progressive disease. More particularly, the present invention is directed to a system and method for preventing or treating Alzheimer's disease or other neurodegenerative diseases.

[Para 54] In accordance with an embodiment of the invention, a pulsed energy source having energy parameters including wavelength or frequency, duty cycle and pulse train duration selected so as to raise a target tissue or bodily target fluid temperature up to eleven degrees Celsius for a short period of time of seconds or less, while maintaining an average temperature rise of the tissue or target fluid over several minutes at or below a predetermined level so as not to permanently damage the target tissue or target fluid. The pulsed energy source is applied to the target tissue or target fluid which is either determined to have a chronic progressive disease or at a risk of having a chronic progressive disease. This determination may be made before imaging, serologic, immunologic, or other abnormalities are detectable and may be done prophylactically. The determination may be accomplished by ascertaining if the patient is at risk for the chronic progressive disease. Alternatively, or additionally, results of an examination or test of the patient may be abnormal. A specific test, such as a genetic test, may be conducted to establish that the patient has a risk for the chronic progressive disease. In the case of Alzheimer's

or other neurodegenerative diseases, MRI or CAT scans of the brain may be performed, cognitive or memory tests may be administered, inheritance factors or genetics, such as a genetic test, may be utilized, or any other test which can determine that the individual is at a risk of acquiring or has Alzheimer's disease or another neurodegenerative disease.

[Para 55] It is believed that a mechanism by which the invention is able to therapeutically or prophylactically treat the biological tissue or fluid is by stimulating heat shock protein activation in a target tissue or target fluid. Heat shock proteins (HSPs) are ubiquitous in highly conserved families of enzymes present in all cells of all creatures. This may account for as much as 40% of all proteins present in a given cell. HSPs are active and essential in maintenance of normal cell function and homeostasis. HSPs have many critical functions, one of which is to protect the cell from lethal injury of any kind and repair sublethal injuries.

[Para 56] While chronic inflammation is pathologic and destructive, acute inflammation can be reparative. Acute inflammation may occur in response to an acute injury. Common injuries requiring repair are typically associated with cellular and tissue damage, such as a wound or infection. Depending upon the severity of injury and the functional sensitivity of the tissue, loss of key functions may result despite wound repair. Incomplete repair or continued or repeated injury may lead to chronic inflammation, as in CPDs.

[Para 57] The normal state of health of maintained by complex physiologic processes of constant surveillance for and repair of defective proteins and

potential threats, such as bacteria, viruses and neoplasia. These normal physiologic processes and their actions are ideal as good health and function is the result of their normal function. While the normal function of these physiological processes are ideal, such homeostatic processes themselves are not always perfectively effective. Potential threats and abnormalities may either escape detection or exceed the ability for repair. Failure of surveillance and response may result from any number of reasons, including disease causing immunosuppression, evasion of detection by hiding of antigenic stimuli, such as occurring in certain cancers and retroviruses, and the onset and progression below the level of symptoms recognition and activation.

[Para 58] HSPs are a first step in the acute inflammatory process. Activation of HSPs by a threat initiates a cascade of subsequent events leading to improved cell function, reduced chronic inflammation, and reparative immunomodulation locally and systemically. The effective HSP activations preserve the life of the cell and normalize cell function, also referred to as homeotrophy. Sudden and severe yet sublethal (to the cell) stimuli are the most potent stimulators of homeotrophic HSP activation. Slowly progressive and chronic stimuli are not effective activators HSP response. Thus, insidiously developing and progressing CPDs do not stimulate a reparative response of the HSP activation. In some CPDs, like diabetes and Alzheimer disease, HSP function itself can become abnormal to the point of failure.

[Para 59] Typically, however, HSPs normalize cell function independent of the cause of abnormality by identifying and repairing abnormal cell proteins

without regard to what made them abnormal, thus normalizing cell function. HSPs have an ability to restore every protein to its correct state or eliminate the irreparable, leading to replacement. As the HSP response is physiologic and thus perfect and without adverse effects, fixing what is broken without regard to the cause of the breakage, the repair response of HSPs is exactly tailored to the disease process. Agnostic to the cause of protein misfolding and consequent cellular dysfunction, homeotrophic HSP activation is thus a non-specific trigger of disease-specific repair.

[Para 60] The inventors have discovered that it is possible to stimulate HSP activation without cell or tissue damage by electromagnetic radiation-induced acute, but sublethal, cellular hyperthermy. In the absence of cell death or tissue damage, the cascade of physiologic repair and homeotrophy of the acute inflammatory response can thus be triggered without any adverse treatment effects. Acute inflammation incited without tissue damage may be thought of as "as if" acute inflammation. That is to say that homeotrophic cellular hyperthermy is able to elicit the acute inflammatory response that is entirely and only beneficial, "as if" it were caused by tissue damage, but in the absence of tissue damage. It has been found that the safest and most efficient stimulus of homeotrophic HSP activation is by pulsed electromagnetic radiation (PEMR). Pulsing allows significant increases in the abruptness and severity of the threat stimulus without killing the target cell to maximize HSP activation in the homeotrophic healing response. The various types of PEMR are best suited to

different biological applications include light, laser, radio wave and microwave and ultrasound.

[Para 61] The eye is the most functionally sensitive organ in the body. There are a number of CPDs that effect the retina that share the typical characteristics of CPDs in general, and neurodegenerative diseases in particular. Accordingly, CPDs of the retina may serve as a model for CPDs elsewhere in the body. Over many years of clinical experience in a large number of patients, it has been found that PEMR in the form of low-intensity/high-density subthreshold diode micropulsed laser treatment (SDM) has been shown to effectively treat, prevent, slow, reverse or stop the progression of every major chronic progressive disease of the retina, without regard to the cause. These include age-related, genetic, metabolic and diseases of unknown etiology of widely varying genotypes and phenotypes. Despite the thermal sensitivity of the retina, SDM does this without any known adverse treatment effects due to the selection of the operating parameters of the PEMR and thus is performed in complete safety.

[Para 62] With respect to conventional retinal photocoagulation, the physician must intentionally create retinal damage as a prerequisite to therapeutically effective treatment. However, the inventors surmised that the therapeutic alterations in the retinal pigment epithelium (RPE) cytokine production elicited by conventional photocoagulation comes from cells at the margins of traditional laser burns which were affected but not killed by the laser exposure. The inventors created energy parameters which created "true

subthreshold photocoagulation", which is invisible and includes laser treatment non-discernable by any known means such as FFA, FAF, retrograde FAF, or even SD-OCT and produces absolutely no retinal damage detectible by any means at the time of treatment or any time thereafter by any known means of detection, but still yields the benefits of conventional retinal photocoagulation. This is discussed in U.S. Publication No. 2016/0346126 A1, the contents of which are hereby incorporated by reference.

[Para 63] Various parameters have been determined to achieve true subthreshold effective photocoagulation, including providing sufficient power to produce effective treatment but not too high to create tissue damage or destruction. It has been found that the intensity or power of a low duty cycle 810 nm laser beam between 100 watts to 590 watts per square centimeter is effective yet safe. A particularly preferred intensity or power of the laser light beam is approximately 250-350 watts per square centimeter for an 810 nm micropulsed diode laser.

[Para 64] Power limitations in current micropulsed diode lasers require fairly long exposure duration, although it is important that the generated heat be able to dissipate toward the unexposed tissue at the margins of the laser spot so as not to damage or destroy the cells or tissue. It has been found that a radiant beam of an 810 nm diode laser should have an exposure envelope of 500 milliseconds or less, and preferably approximately 100-300 milliseconds. If micropulsed diode lasers become more powerful, the exposure duration can be lessened accordingly. It has been found that invisible phototherapy or true

subthreshold photocoagulation in accordance with the present invention can be performed at various laser light wavelengths, such as from a range of 532 nm to 1300 nm. Use of a different wavelength can impact the preferred intensity or power of the laser light beam and the exposure envelope duration in order that the retinal tissue is not damaged, yet therapeutic effect is achieved. Typically, the laser light pulse is less than a millisecond in duration, and typically between 50 microseconds to 100 microseconds in duration.

[Para 65] Another parameter of the present invention when utilizing laser light is the duty cycle, or the frequency of the train of micropulses or the length of the thermal relaxation time in between consecutive pulses. It has been found that the use of a 10% duty cycle or higher can increase the risk of lethal cell injury in the retina. Thus, duty cycles less than 10%, and preferably approximately 5% duty cycle or less are used as this parameter has been demonstrated to provide adequate thermal rise in treatment that remains below the level expected to produce lethal cell injury. The lower the duty cycle, the longer the exposure envelope duration can be. For example, if the duty cycle is less than 5%, the exposure envelope duration in some instances can exceed 500 milliseconds.

[Para 66] Thus, the following key parameters have been found in order to create harmless, true (sublethal to the retina) subthreshold photocoagulation in retinal tissue in accordance with the present invention:

[Para 67] a) light beam having a wavelength of at least 532 nm, and preferably between 532 nm to 1300 nm;

[Para 68] b) low duty cycle, such as less than 10% and preferably 5% or less;

[Para 69] c) a sufficiently small spot size to minimize heat accumulation and assure uniform heat distribution within a given laser spot so as to maximize heat dissipation; and

[Para 70] d) sufficient power to produce retinal laser exposures between 18-55 times MPE producing an RPE temperature rise of 7° C - 14° C and retinal irradiance of between 100-590 W/CM^2.

[Para 71] Using these foregoing parameters, harmless yet therapeutically effective true subthreshold or invisible photocoagulation phototherapy treatment can be obtained which can be attained which has been found to produce benefits of conventional photocoagulation phototherapy but avoid drawbacks and complications of conventional phototherapy. Adverse treatment effects are completely eliminated and functional retina preserved rather than sacrificed. Moreover, the entire retina can be exposed to the pulsed energy source of the present invention, allowing both preventative and therapeutic treatment of eyes with retinal disease completely rather than locally or subtotally.

[Para 72] In the retina, the clinical benefits of SDM are produced by photothermal RPE HSP activation sublethal to the RPE. In dysfunctional RPE cells, HSP stimulation by SDM results in normalized cytokine expression and consequently improved retinal structure and function. As normally functioning cells are not in need of repair, HSP stimulation in normal cells would tend to have no notable clinical effect. The "patho-selectivity" of near infrared laser

effects, such as SDM affecting sick cells but not affecting normal ones on various cell types, is consistent with clinical observations of SDM. This facility is key to the suitability of SDM for early and preventative treatment of eyes with chronic progressive disease and eyes with minimal retinal abnormality and minimal dysfunction. Despite the safety of SDM, the clinical effects of SDM are marked and profound. For instance, SDM reduces the rate of progression of diabetic retinopathy by 85% ($P=0.0001$) and age-related macular degeneration by at least 95% ($P<0.0001$), improves optic nerve function in glaucoma ($P=0.001$) and visual fields in glaucoma and all retinal diseases including retinitis pigmentosa ($P<0.0001$).

[Para 73] With reference now to FIG. 1, a schematic diagram is shown of a system for realizing the process of the present invention. The system, generally referred to by the reference number 10, includes a laser console 12, such as for example the 810 nm near infrared micropulsed diode laser in the preferred embodiment. The laser generates a laser light beam which is passed through optics, such as an optical lens or mask, or a plurality of optical lenses and/or masks 14 as needed. The laser projector optics 14 pass the shaped light beam to a coaxial wide-field non-contact digital optical viewing system/camera 16 for projecting the laser beam light onto the eye 18 of the patient, or other biological target tissue or bodily fluid as more fully discussed herein. It will be understood that the box labeled 16 can represent both the laser beam projector as well as a viewing system/camera, which might in reality comprise two different components in use. The viewing system/camera 16 provides feedback

to a display monitor 20, which may also include the necessary computerized hardware, data input and controls, etc. for manipulating the laser 12, the optics 14, and/or the projection/viewing components 16.

[Para 74] With reference now to FIG. 2, in one embodiment, the laser light beam 22 is passed through a collimator lens 24 and then through a mask 26. In a particularly preferred embodiment, the mask 26 comprises a diffraction grating. The mask/diffraction grating 26 produces a geometric object, or more typically a geometric pattern of simultaneously produced multiple laser spots or other geometric objects. This is represented by the multiple laser light beams labeled with reference number 28. Alternatively, the multiple laser spots may be generated by a plurality of fiber optic wires. Either method of generating laser spots allows for the creation of a very large number of laser spots simultaneously over a very wide treatment field, such as consisting of the entire retina. In fact, a very high number of laser spots, perhaps numbering in the hundreds even thousands or more could cover the entire ocular fundus and entire retina, including the macula and fovea, retinal blood vessels and optic nerve. The intent of the process in the present invention is to better ensure complete and total coverage and treatment of the target area, which may comprise a retina, and sparing none of the retina by the laser so as to improve vision.

[Para 75] Using optical features with a feature size on par with the wavelength of the laser employed, for example using a diffraction grating, it is possible to take advantage of quantum mechanical effects which permits

simultaneous application of a very large number of laser spots for a very large target area. The individual spots produced by such diffraction gratings are all of a similar optical geometry to the input beam, with minimal power variation for each spot. The result is a plurality of laser spots with adequate irradiance to produce harmless yet effective treatment application, simultaneously over a large target area. The present invention also contemplates the use of other geometric objects and patterns generated by other diffractive optical elements.

[Para 76] The laser light passing through the mask 26 diffracts, producing a periodic pattern a distance away from the mask 26, shown by the laser beams labeled 28 in FIG. 2. The single laser beam 22 has thus been formed into multiple, up to hundreds or even thousands, of individual laser beams 28 so as to create the desired pattern of spots or other geometric objects. These laser beams 28 may be passed through additional lenses, collimators, etc. 30 and 32 in order to convey the laser beams and form the desired pattern on the patient's retina. Such additional lenses, collimators, etc. 30 and 32 can further transform and redirect the laser beams 28 as needed.

[Para 77] Arbitrary patterns can be constructed by controlling the shape, spacing and pattern of the optical mask 26. The pattern and exposure spots can be created and modified arbitrarily as desired according to application requirements by experts in the field of optical engineering. Photolithographic techniques, especially those developed in the field of semiconductor manufacturing, can be used to create the simultaneous geometric pattern of spots or other objects.

[Para 78] Although hundreds or even thousands of simultaneous laser spots could be generated and created and formed into patterns to be applied to the tissue, due to the requirements of not overheating the tissue, there are constraints on the number of treatment spots or beams which can be simultaneously used in accordance with the present invention. Each individual laser beam or spot requires a minimum average power over a train duration to be effective. However, at the same time, tissue cannot exceed certain temperature rises without becoming damaged. For example, using an 810 nm wavelength laser, the number of simultaneous spots generated and used could number from as few as 1 and up to approximately 100 when a 0.04 (4%) duty cycle and a total train duration of 0.3 seconds (300 milliseconds) is used.

[Para 79] Absorption by water increases as the wavelength is increased, resulting in heating over the long path length through the vitreous humor in front of the retina. For shorter wavelengths, e.g., 577 nm, the absorption coefficient in the RPE's melanin can be higher, and therefore the laser power can be lower. For example, at 577 nm, the power can be lowered by a factor of 4 for the invention to be effective. Accordingly, there can be as few as a single laser spot or up to approximately 400 laser spots when using the 577 nm wavelength laser light, while still not harming or damaging the eye or other tissue. The present invention can use a multitude of simultaneously generated therapeutic light beams or spots, such as numbering in the dozens or even hundreds, as the parameters and methodology of the present invention create

therapeutically effective yet non-destructive and non-permanently damaging treatment.

[Para 80] FIG. 3 illustrates diagrammatically a system which couples multiple light sources into the pattern-generating optical subassembly described above. Specifically, this system 10' is similar to the system 10 described in FIG. 1 above. The primary differences between the alternate system 10' and the earlier described system 10 is the inclusion of a plurality of laser consoles 12, the outputs of which are each fed into a fiber coupler 34. The fiber coupler produces a single output that is passed into the laser projector optics 14 as described in the earlier system. The coupling of the plurality of laser consoles 12 into a single optical fiber is achieved with a fiber coupler 34 as is known in the art. Other known mechanisms for combining multiple light sources are available and may be used to replace the fiber coupler described herein.

[Para 81] In this system 10' the multiple light sources 12 follow a similar path as described in the earlier system 10, i.e., collimated, diffracted, recollimated, and directed into the retina with a steering mechanism. In this alternate system 10' the diffractive element functions differently than described earlier depending upon the wavelength of light passing through, which results in a slightly varying pattern. The variation is linear with the wavelength of the light source being diffracted. In general, the difference in the diffraction angles is small enough that the different, overlapping patterns may be directed along the same optical path through the steering mechanism 16 to the retina 18 for

treatment. The slight difference in the diffraction angles will affect how the steering pattern achieves coverage of the retina.

[Para 82] Since the resulting pattern will vary slightly for each wavelength, a sequential offsetting to achieve complete coverage will be different for each wavelength. This sequential offsetting can be accomplished in two modes. In the first mode, all wavelengths of light are applied simultaneously without identical coverage. An offsetting steering pattern to achieve complete coverage for one of the multiple wavelengths is used. Thus, while the light of the selected wavelength achieves complete coverage of the tissue area to be treated, the application of the other wavelengths achieves either incomplete or overlapping coverage of the tissue. The second mode sequentially applies each light source of a varying or different wavelength with the proper steering pattern to achieve complete coverage of the tissue for that particular wavelength. This mode excludes the possibility of simultaneous treatment using multiple wavelengths, but allows the optical method to achieve identical coverage for each wavelength. This avoids either incomplete or overlapping coverage for any of the optical wavelengths.

[Para 83] These modes may also be mixed and matched. For example, two wavelengths may be applied simultaneously with one wavelength achieving complete coverage and the other achieving incomplete or overlapping coverage, followed by a third wavelength applied sequentially and achieving complete coverage.

[Para 84] FIGURE 4 illustrates diagrammatically yet another alternate embodiment of the inventive system 10". This system 10" is configured generally the same as the system 10 depicted in FIG. 1. The main difference resides in the inclusion of multiple pattern-generating subassembly channels tuned to a specific wavelength of the light source. Multiple laser consoles 12 are arranged in parallel with each one leading directly into its own laser projector optics 14. The laser projector optics of each channel 38a, 38b, 38c comprise a collimator 24, mask or diffraction grating 28 and recollimators 30, 32 as described in connection with FIG. 2 above--the entire set of optics tuned for the specific wavelength generated by the corresponding laser console 12. The output from each set of optics 14 is then directed to a beam splitter 36 for combination with the other wavelengths. It is known by those skilled in the art that a beam splitter used in reverse can be used to combine multiple beams of light into a single output.

[Para 85] The combined channel output from the final beam splitter 36c is then directed through the camera 16 which applies a steering mechanism to allow for complete coverage of the retina 18.

[Para 86] In this system 10" the optical elements for each channel are tuned to produce the exact specified pattern for that channel's wavelength. Consequently, when all channels are combined and properly aligned a single steering pattern may be used to achieve complete coverage of the retina for all wavelengths.

[Para 87] The system 10" may use as many channels 38a, 38b, 38c, etc. and beam splitters 36a, 36b, 36c, etc. as there are wavelengths of light being used in the treatment.

[Para 88] Implementation of the system 10" may take advantage of different symmetries to reduce the number of alignment constraints. For example, the proposed grid patterns are periodic in two dimensions and steered in two dimensions to achieve complete coverage. As a result, if the patterns for each channel are identical as specified, the actual pattern of each channel would not need to be aligned for the same steering pattern to achieve complete coverage for all wavelengths. Each channel would only need to be aligned optically to achieve an efficient combination.

[Para 89] In system 10", each channel begins with a light source 12, which could be from an optical fiber as in other embodiments of the pattern-generating subassembly. This light source 12 is directed to the optical assembly 14 for collimation, diffraction, recollimation and directed into the beam splitter which combines the channel with the main output.

[Para 90] The field of photobiology reveals that different biologic effects may be achieved by exposing target tissues to lasers of different wavelengths. The same may also be achieved by consecutively applying multiple lasers of either different or the same wavelength in various sequences with variable time periods of separation and/or with different irradiant energies. The present invention anticipates the use of multiple laser, light or radiant wavelengths (or modes) applied simultaneously or in sequence to maximize or customize the

desired treatment effects. This method also minimizes potential detrimental effects. The optical methods and systems illustrated and described above provide simultaneous or sequential application of multiple wavelengths.

[Para 91] Typically, the system of the present invention incorporates a guidance system to ensure complete and total treatment with photostimulation. Fixation/tracking/registration systems consisting of a fixation target, tracking mechanism, and linked to system operation can be incorporated into the present invention.

[Para 92] In a particularly preferred embodiment, the geometric pattern of simultaneous laser spots is sequentially offset so as to achieve confluent and complete treatment of the target tissue. This is done in a time-saving manner by placing a plurality of spots over the target tissue at once. This pattern of simultaneous spots is scanned, shifted, or redirected as an entire array sequentially, so as to cover the entire target tissue in a single treatment session.

[Para 93] This can be done in a controlled manner using an optical scanning mechanism 40. FIGS. 5 and 6 illustrate an optical scanning mechanism 40 which may be used in the form of a MEMS mirror, having a base 42 with electronically actuated controllers 44 and 46 which serve to tilt and pan the mirror 48 as electricity is applied and removed thereto. Applying electricity to the controller 44 and 46 causes the mirror 48 to move, and thus the simultaneous pattern of laser spots or other geometric objects reflected thereon to move accordingly on the target tissue of the patient. This can be

done, for example, in an automated fashion using an electronic software program to adjust the optical scanning mechanism 40 until complete coverage of the target tissue, or at least the portion of the target tissue desired to be treated, is exposed to the phototherapy. The optical scanning mechanism may also be a small beam diameter scanning galvo mirror system, or similar system, such as that distributed by Thorlabs. Such a system is capable of scanning the lasers in the desired offsetting pattern.

[Para 94] Since the parameters of the present invention dictate that the applied radiant energy or laser light is not destructive or damaging, the geometric pattern of laser spots, for example, can be overlapped without destroying the tissue or creating any permanent damage. However, in a particularly preferred embodiment, as illustrated in FIG. 7, the pattern of spots are offset at each exposure so as to create space between the immediately previous exposure to allow heat dissipation and prevent the possibility of heat damage or tissue destruction. Thus, as illustrated in FIG. 7, the pattern, illustrated for exemplary purposes as a grid of sixteen spots, is offset each exposure such that the laser spots occupy a different space than previous exposures. It will be understood that the diagrammatic use of circles or empty dots as well as filled dots are for diagrammatic purposes only to illustrate previous and subsequent exposures of the pattern of spots to the area, in accordance with the present invention. The spacing of the laser spots prevents overheating and damage to the tissue. It will be understood that this occurs until the entire target tissue has received phototherapy, or until the desired

effect is attained. This can be done, for example, by a scanning mechanism, such as by applying electrostatic torque to a micromachined mirror, as illustrated in FIGS. 5 and 6. By combining the use of small laser spots separated by exposure free areas, prevents heat accumulation, and grids with a large number of spots per side, it is possible to atraumatically and invisibly treat large target areas with short exposure durations very rapidly.

[Para 95] By rapidly and sequentially repeating redirection or offsetting of the entire simultaneously applied grid array of spots or geometric objects, complete coverage of the target tissue, such as a human retina, can be achieved rapidly without thermal tissue injury. This offsetting can be determined algorithmically to ensure the fastest treatment time and least risk of damage due to thermal tissue, depending on laser parameters and desired application.

[Para 96] For example, the following has been modeled using the Fraunhoffer Approximation. With a mask having a nine by nine square lattice, with an aperture radius 9 .mu.m, an aperture spacing of 600 .mu.m, using a 890 nm wavelength laser, with a mask-lens separation of 75 mm, and secondary mask size of 2.5 mm by 2.5 mm, the following parameters will yield a grid having nineteen spots per side separated by 133 .mu.m with a spot size radius of 6 .mu.m. The number of exposures "m" required to treat (cover confluently with small spot applications) given desired area side-length "A", given output pattern spots per square side "n", separation between spots "R", spot radius "r" and desired square side length to treat area "A", can be given by the following formula:

$$m = \frac{A}{nR} floor\left(\frac{R}{2r}\right)^2$$

[Para 97] With the foregoing setup, one can calculate the number of operations m needed to treat different field areas of exposure. For example, a 3 mm times 3 mm area, which is useful for treatments, would require 98 offsetting operations, requiring a treatment time of approximately thirty seconds. Another example would be a 3 cm times 3 cm area. For such a large treatment area, a much larger secondary mask size of 25 mm by 25 mm could be used, yielding a treatment grid of 190 spots per side separated by 133 μm with a spot size radius of 6 μm. Since the secondary mask size was increased by the same factor as the desired treatment area, the number of offsetting operations of approximately 98, and thus treatment time of approximately thirty seconds, is constant. Field sizes of 3 mm would, for example, allow treatment of the entire human macula in a single exposure, useful for treatment of common blinding conditions such as diabetic macular edema and age-related macular degeneration. Performing the entire 98 sequential offsettings would ensure entire coverage of the macula.

[Para 98] Of course, the number and size of spots produced in a simultaneous pattern array can be easily and highly varied such that the number of sequential offsetting operations required to complete treatment can be easily adjusted depending on the therapeutic requirements of the given application.

[Para 99] Furthermore, by virtue of the small apertures employed in the diffraction grating or mask, quantum mechanical behavior may be observed

which allows for arbitrary distribution of the laser input energy. This would allow for the generation of any arbitrary geometric shapes or patterns, such as a plurality of spots in grid pattern, lines, or any other desired pattern. Other methods of generating geometric shapes or patterns, such as using multiple fiber optical fibers or microlenses, could also be used in the present invention.

[Para 100] With reference now to FIGS. 8 and 9, instead of a geometric pattern of small laser spots, the present invention contemplates use of other geometric objects or patterns. For example, a single line 50 of laser light, formed continuously or by means of a series of closely spaced spots, can be created. An offsetting optical scanning mechanism can be used to sequentially scan the line over an area, illustrated by the downward arrow in FIG. 8. With reference now to FIG. 9, the same geometric object of a line 50 can be rotated, as illustrated by the arrows, so as to create a circular field of phototherapy. The potential negative of this approach, however, is that the central area will be repeatedly exposed, and could reach unacceptable temperatures. This could be overcome, however, by increasing the time between exposures, or creating a gap in the line such that the central area is not exposed.

[Para 101] Power limitations in current micropulsed diode lasers require fairly long exposure duration. The longer the exposure, the more important the center-spot heat dissipating ability toward the unexposed tissue at the margins of the laser spot. Thus, the micropulsed laser light beam of an 810 nm diode laser should have an exposure envelope duration of 500 milliseconds or less, and preferably approximately 300 milliseconds. Of course, if micropulsed diode

lasers become more powerful, the exposure duration should be lessened accordingly.

[Para 102] Aside from power limitations, another parameter of the present invention is the duty cycle, or the frequency of the train of micropulses, or the length of the thermal relaxation time between consecutive pulses. It has been found that the use of a 10% duty cycle or higher adjusted to deliver micropulsed laser at similar irradiance at similar MPE levels significantly increase the risk of lethal cell injury. However, duty cycles of less than 10%, and preferably 5% or less demonstrate adequate thermal rise and treatment at the level of the MPE cell to stimulate a biological response, but remain below the level expected to produce lethal cell injury. The lower the duty cycle, however, the exposure envelope duration increases, and in some instances can exceed 500 milliseconds.

[Para 103] Each micropulse lasts a fraction of a millisecond, typically between 50 microseconds to 100 microseconds in duration. Thus, for the exposure envelope duration of 300-500 milliseconds, and at a duty cycle of less than 5%, there is a significant amount of time between micropulses to allow the thermal relaxation time between consecutive pulses. Typically, a delay of between 1 and 3 milliseconds, and preferably approximately 2 milliseconds, of thermal relaxation time is needed between consecutive pulses. For adequate treatment, the cells are typically exposed or hit by the laser light between 50-200 times, and preferably between 75-150 at each location. With the 1-3 milliseconds of relaxation or interval time, the total time in accordance with the embodiments

described above to treat a given area, or more particularly the locations of the target tissue which are being exposed to the laser spots is between 200 milliseconds and 500 milliseconds on average. The thermal relaxation time is required so as not to overheat the cells within that location or spot and so as to prevent the cells from being damaged or destroyed.

[Para 104] The inventors have found that treatment in accordance with the invention of patients suffering from age-related macular degeneration (AMD) can slow the progress or even stop the progression of AMD. Further evidence of this restorative treatment effect is the inventor's finding that treatment can uniquely reduce the risk of vision loss in AMD due to choroidal neovascularization by as much as 90%. Most of the patients have seen significant improvement in dynamic functional mesopic logMAR visual acuity and contrast visual acuity after the treatment in accordance with the invention, with some experiencing better vision. It is believed that this works by targeting, preserving, and "normalizing" (moving toward normal) function of the retinal pigment epithelium (RPE).

[Para 105] Treatment in accordance with the invention has also been shown to stop or reverse the manifestations of the diabetic retinopathy disease state without treatment-associated damage or adverse effects, despite the persistence of systemic diabetes mellitus. Studies by the inventor have shown that the restorative effect of treatment can uniquely reduce the risk of progression of diabetic retinopathy by 85%. On this basis it is hypothesized that the invention might work by inducing a return to more normal cell function and

cytokine expression in diabetes-affected RPE cells, analogous to hitting the "reset" button of an electronic device to restore the factory default settings.

[Para 106] Based on the above information and studies, SDM treatment may directly affect cytokine expression and heat shock protein (HSP) activation in the targeted tissue, particularly the retinal pigment epithelium (RPE) layer. Panretinal and panmacular SDM has been noted by the inventors to reduce the rate of progression of many retinal diseases, including severe non-proliferative and proliferative diabetic retinopathy, AMD, DME, etc. The known therapeutic treatment benefits of individuals having these retinal diseases, coupled with the absence of known adverse treatment effects, allows for consideration of early and preventative treatment, liberal application and retreatment as necessary. The reset theory also suggests that the invention may have application to many different types of RPE-mediated retinal disorders. In fact, the inventor has recently shown that panmacular treatment can significantly improve retinal function and health, retinal sensitivity, and dynamic logMAR visual acuity and contrast visual acuity in dry age-related macular degeneration, retinitis pigmentosa, cone-rod retinal degenerations, and Stargardt's disease where no other treatment has previously been found to do so.

[Para 107] Currently, retinal imaging and visual acuity testing guide management of chronic, progressive retinal diseases. As tissue and/or organ structural damage and vision loss are late disease manifestations, treatment instituted at this point must be intensive, often prolonged and expensive, and frequently fails to improve visual acuity and rarely restores normal vision. As

the invention has been shown to be an effective treatment for a number of retinal disorders without adverse treatment effects, and by virtue of its safety and effectiveness, it can also be used to treat an eye to stop or delay the onset or symptoms of retinal diseases prophylactically or as a preventative treatment for such retinal diseases. Any treatment that improves retinal function, and thus health, should also reduce disease severity, progression, untoward events and visual loss. By beginning treatment early, prior to pathologic structural change, and maintaining the treatment benefit by regular functionally-guided re-treatment, structural degeneration and visual loss might thus be delayed if not prevented. Even modest early reductions in the rate of disease progression may lead to significant long-term reductions and complications in visual loss. By mitigating the consequences of the primary defect, the course of disease may be muted, progression slowed, and complications and visual loss reduced. This is reflected in the inventor's studies, finding that treatment reduces the risk of progression and visual loss in diabetic retinopathy by 85% and AMD by 80%.

[Para 108] In accordance with an embodiment of the present invention, it is determined that a patient, such as an eye of the patient, has a risk for a disease. This may be before imaging abnormalities are detectable. Such a determination may be accomplished by ascertaining if the patient is at risk for a chronic progressive disease, such as retinopathy, including diabetes, a risk for age-related macular degeneration or retinitis pigmentosa. Alternatively, or additionally, results of an examination or test of the patient may be abnormal.

A specific test, such as a physiology test or a genetic test, may be conducted to establish that the patient has a risk for a disease.

[Para 109] When treating or prophylactically protecting retinal or other eye tissue having a chronic progressive disease or a risk of a chronic progressive disease, a laser light beam, that is sublethal and creates true subthreshold photocoagulation and retinal tissue, is generated and at least a portion of the retinal tissue is exposed to the generated laser light beam without damaging the exposed retinal or foveal tissue, so as to provide preventative and protective treatment of the retinal tissue of the eye. The treated retina may comprise the fovea, foveola, retinal pigment epithelium (RPE), choroid, choroidal neovascular membrane, subretinal fluid, macula, macular edema, parafovea, and/or perifovea. The laser light beam may be exposed to only a portion of the retina, or substantially the entire retina and fovea.

[Para 110] While many treatment effects appear to be long-lasting, if not permanent, clinical observations and laboratory studies suggest that others can wear off. Accordingly, the tissue is periodically retreated to maintain maximum effects and treatment benefits. This may be done according to a set schedule or when it is determined that the tissue of the patient is to be retreated, such as by periodically monitoring visual and/or retinal function or condition of the patient.

[Para 111] Although the present invention is particularly suited for treatment of retinal diseases, such as diabetic retinopathy and macular edema, it has been found that it can be used for other diseases as well. The system and process of

the present invention could target the trabecular mesh work as treatment for glaucoma, accomplished by another customized treatment field template. Moreover, treatment of retinal tissue using SDM, as explained above, in eyes with advanced open-angle glaucoma have shown improved key measures of optic nerve and ganglion cell function, indicating a significant neuroprotective effect of this treatment. Visual fields also improved, and there was no adverse treatment effects. Thus, it is believed that SDM, in accordance with the present invention, may aid in the clinical management of glaucoma by reducing the risk of visual loss, independent of intraocular pressure (IOP) lowering.

[Para 112] Low-intensity/high density subthreshold (sublethal) diode micropulsed laser (SDM), as explained in detail above, has been shown to be effective in the treatment of traditional retinal laser indications such as diabetic macular edema, proliferative diabetic retinopathy, central serious chorioretinopathy, and branch retinal vein occlusion, without adverse treatment effects. As described above, the mechanism of the retinal laser treatment is sometimes referred to herein as "reset to default" theory, which postulates that the primary mode of retinal laser action is sublethal activation of the retinal pigment epithelial (RPE) heat shock proteins.

[Para 113] A study recently conducted by the inventors also shows that SDM should be neuroprotective in open-angle glaucoma. Linear regression analysis demonstrated that the most abnormal values prior to treatment improved the most following treatment for nearly all measures. Panmacular SDM treatment, in accordance with the present invention, in eyes with advanced open-angle

glaucoma (OAG) improved key measures of optic nerve and ganglion cell function, indicating a significant neuroprotective effective treatment. The visual fields also improved, and there were no adverse treatment effects. Thus, generating a micropulsed laser light beam having characteristics and parameters discussed above and applying the laser light beam to the retinal and/or foveal tissue of an eye having glaucoma or a risk of glaucoma creates a therapeutic effect to the retinal and/or foveal tissue exposed to the laser light beam without destroying or permanently damaging the retinal and/or foveal tissue and also improves function or condition of an optic nerve and/or retinal ganglion cells of the eye.

[Para 114] Retinal ganglion cells and the optic nerve are subject to the health and function of the retinal pigment epithelium (RPE). Retinal homeostasis is principally maintained by the RPE via still the poorly understood but exquisitely complex interplay of small proteins excreted by the RPE into the intercellular space called "cytokines". Some RPE-derived cytokines, like pigment epithelial derived factor (PEDF) are neuroprotective. Retinal laser treatment may alter RPE cytokine expression, including, but not limited to, increasing expression of PEDF. Absent retinal damage, the effect of SDM, in accordance with the present invention, is "homeotrophic", moving retinal function toward normal. By normalizing RPE function, it follows that retinal autoregulation and cytokine expression is also normalized. This suggests the normalization of retinal cytokine expression may be the source of the neuroprotective effects from SDM in OAG.

[Para 115] Despite the markedly beneficial effects of SDM in chronic progressive retinal diseases, there are no other treatments for most of these diseases that have any benefit at all. In this respect, retinal CPDs are also like CPDs elsewhere. In all CPDs including type II diabetes, Alzheimer disease, idiopathic pulmonary fibrosis (IPF) and ischemic heart disease and various cardiomyopathies, abnormalities of the HSP system has been recognized. Currently, outside of the present invention, there is no non-physical therapy to stimulate HSP homeotrophic effects in systemic CPDs. Experience with SDM in connection with eye diseases suggests that appropriately designed PEMR should effectively and safely treat any CPDs affecting any other part of the body. Moreover, experience with SDM in otherwise untreatable retinal diseases suggests that the beneficial effects of PEMR elsewhere should be major and not minor, robust, significant and safe. As with SDM, the effect of PEMR for CPDs elsewhere in the body would most likely not cure the primary cause of disease (age, diabetes, genetic defect, etc.), but instead the effect would be to slow, stop or reverse the disease process by repair of the abnormalities that develop as a consequence of the primary disease defect. By maintenance of the treatment benefits via periodic retreatment, the course of the disease process should be attenuated, reducing the risks of death and disability.

[Para 116] As heat shock proteins play a role in responding to a large number of abnormal conditions in body tissue other than eye tissue, it is believed that similar systems and methodologies can be advantageously used in treating such abnormal conditions, infections, etc, outside the eye. As such, the present

invention is also directed to the controlled application of pulsed ultrasound or electromagnetic radiation to treat abnormal conditions including inflammations, autoimmune conditions, and cancers that are accessible by means of fiber optics of endoscopes or surface probes as well as focused electromagnetic/sound waves. For example, cancers on the surface of the prostate that have the largest threat of metastasizing can be accessed by means of fiber optics in a proctoscope. Colon tumors can be accessed by an optical fiber system, like those used in colonoscopy.

[Para 117] As indicated above, subthreshold diode micropulsed laser (SDM) photostimulation has been effective in stimulating direct repair of slightly misfolded proteins in eye tissue. Besides HSP activation, another way this may occur is because the spikes in temperature caused by the micropulses in the form of a thermal time-course allows diffusion of water inside proteins, and this allows breakage of the peptide-peptide hydrogen bonds that prevent the protein from returning to its native state. The diffusion of water into proteins results in an increase in the number of restraining hydrogen bonds by a factor on the order of a thousand. Thus, it is believed that this process could be applied to other diseases advantageously as well.

[Para 118] Laser treatment can induce HSP production or activation and alter cytokine expression. The more sudden and severe the non-lethal cellular stress (such as laser irradiation), the more rapid and robust HSP activation. Thus, a burst of repetitive low temperature thermal spikes at a very steep rate of change (~ 7°C elevation with each 100μs micropulse, or 70,000°C/sec)

produced by each SDM exposure is especially effective in stimulating activation of HSPs, particularly compared to non-lethal exposure to subthreshold treatment with continuous wave lasers, which can duplicate only the low average tissue temperature rise.

[Para 119] In accordance with the system and method of the present invention, a pulsed energy source, such as laser, ultrasound, ultraviolet, radiofrequency, microwave radiofrequency and the like, having energy parameters selected to cause a thermal time-course in tissue or bodily fluid to raise the target tissue or bodily fluid temperature over a short period of time to a sufficient level to achieve a therapeutic effect while maintaining average tissue temperature over a prolonged period of time below a predetermined level so as to avoid permanent tissue damage. It is believed that the creation of the thermal time-course stimulates heat shock protein activation or production and facilitates protein repair without causing any cellular damage. The parameters of the pulsed energy source and its application to the target tissue or target bodily fluid is important in creating the thermal time-course so as to have a therapeutic effect without causing damage.

[Para 120] The selection of these parameters may be determined by requiring that the Arrhenius integral for HSP activation be greater than 1 or unity. Arrhenius integrals are used for analyzing the impacts of actions on biological tissue. See, for instance, The CRC Handbook of Thermal Engineering, ed. Frank Kreith, Springer Science and Business Media (2000). At the same time, the selected parameters must not permanently damage the tissue. Thus, the

Arrhenius integral for damage may also be used, wherein the solved Arrhenius integral is less than 1 or unity.

[Para 121] Alternatively, the FDA/FCC constraints on energy deposition per unit gram of tissue and temperature rise as measured over periods of minutes be satisfied so as to avoid permanent tissue damage. The FDA/FCC requirements on energy deposition and temperature rise are widely used and can be referenced, for example, at www.fda.gov/medicaldevices/deviceregulationandguidance/guidancedocuments/ucm073817.htm#attacha for electromagnetic sources, and Anastosio and P. LaRivero, ed., Emerging Imaging Technologies. CRC Press (2012), for ultrasound sources.

[Para 122] Generally speaking, tissue temperature rises of between 6°C and 11°C for a short period of time, such as seconds or fractions of a second, can create therapeutic effect, such as by activating heat shock proteins, whereas maintaining the average tissue temperature over a prolonged period of time, such as over several minutes, such as six minutes, below a predetermined temperature, such as 6°C and even 1°C or less in certain circumstances, will not permanently damage the tissue.

[Para 123] As explained above, the energy source to be applied to the target tissue will have energy and operating parameters which must be determined and selected so as to achieve the therapeutic effect while not permanently damaging the tissue. Using a light beam energy source, such as a laser light beam, as an example, the laser wavelength, duty cycle and total pulse train

duration parameters must be taken into account. Other parameters which can be considered include the radius of the laser source as well as the average laser power. Adjusting or selecting one of these parameters can have an effect on at least one other parameter.

[Para 124] FIGURES 10 and 11 illustrate graphs showing the average power in watts as compared to the laser source radius (between 0.1 cm and 0.4 cm) and pulse train duration (between 0.1 and 0.6 seconds). FIG. 10 shows a wavelength of 880 nm, whereas FIG. 11 has a wavelength of 1000 nm. It can be seen in these figures that the required power decreases monotonically as the radius of the source decreases, as the total train duration increases, and as the wavelength decreases. The preferred parameters for the radius of the laser source is 1 mm–4 mm. For a wavelength of 880 nm, the minimum value of power is 0.55 watts, with a radius of the laser source being 1 mm, and the total pulse train duration being 600 milliseconds. The maximum value of power for the 880 nm wavelength is 52.6 watts when the laser source radius is 4 mm and the total pulse drain duration is 100 milliseconds. However, when selecting a laser having a wavelength of 1000 nm, the minimum power value is 0.77 watts with a laser source radius of 1 mm and a total pulse train duration of 600 milliseconds, and a maximum power value of 73.6 watts when the laser source radius is 4 mm and the total pulse duration is 100 milliseconds. The corresponding peak powers, during an individual pulse, are obtained from the average powers by dividing by the duty cycle.

[Para 125] The volume of the tissue region to be heated is determined by the wavelength, the absorption length in the relevant tissue, and by the beam width. The total pulse duration and the average laser power determine the total energy delivered to heat up the tissue, and the duty cycle of the pulse train gives the associated spike, or peak, power associated with the average laser power. Preferably, the pulsed energy source energy parameters are selected so that approximately 20 to 40 joules of energy is absorbed by each cubic centimeter of the target tissue.

[Para 126] The absorption length is very small in the thin melanin layer in the retinal pigmented epithelium. In other parts of the body, the absorption length is not generally that small. In wavelengths ranging from 400 nm to 2000 nm, the penetration depth and skin is in the range of 0.5 mm to 3.5 mm. The penetration depth into human mucous tissues in the range of 0.5 mm to 6.8 mm. Accordingly, the heated volume will be limited to the exterior or interior surface where the radiation source is placed, with a depth equal to the penetration depth, and a transverse dimension equal to the transverse dimension of the radiation source. Since the light beam energy source is used to treat diseased tissues near external surfaces or near internal accessible surfaces, a source radii of between 1 mm to 4 mm and operating a wavelength of 880 nm yields a penetration depth of approximately 2.5 mm and a wavelength of 1000 nm yields a penetration depth of approximately 3.5 mm.

[Para 127] It has been determined that the target tissue can be heated to up to approximately 11°C for a short period of time, such as less than one second, to

create the therapeutic effect of the invention while maintaining the target tissue average temperature to a lower temperature range, such as less than 6°C or even 1°C or less over a prolonged period of time, such as several minutes. The selection of the duty cycle and the total pulse train duration provide time intervals in which the heat can dissipate. A duty cycle of less than 10%, and preferably between 2.5% and 5%, with a total pulse duration of between 100 milliseconds and 600 milliseconds has been found to be effective. FIGS. 12 and 13 illustrate the time to decay from 10°C to 1°C for a laser source having a radius of between 0.1 cm and 0.4 cm with the wavelength being 880 nm in FIG. 12 and 1000 nm in FIG. 13. It can be seen that the time to decay is less when using a wavelength of 880 nm, but either wavelength falls within the acceptable requirements and operating parameters to achieve the benefits of the present invention while not causing permanent tissue damage.

[Para 128] It has been found that the average temperature rise of the desired target region increasing at least 6°C and up to 11°C, and preferably approximately 10°C, during the total irradiation period results in HSP activation. The control of the target tissue temperature is determined by choosing source and target parameters such that the Arrhenius integral for HSP activation is larger than 1, while at the same time assuring compliance with the conservative FDA/FCC requirements for avoiding damage or a damage Arrhenius integral being less than 1.

[Para 129] In order to meet the conservative FDA/FCC constraints to avoid permanent tissue damage, for light beams, and other electromagnetic radiation

sources, the average temperature rise of the target tissue over any six-minute period is 1°C or less. FIGS. 12 and 13 above illustrate the typical decay times required for the temperature in the heated target region to decrease by thermal diffusion from a temperature rise of approximately 10°C to 1°C as can be seen in FIG. 12 when the wavelength is 880 nm and the source diameter is 1 millimeter, the temperature decay time is 16 seconds. The temperature decay time is 107 seconds when the source diameter is 4 mm. As shown in FIG. 13, when the wavelength is 1000 nm, the temperature decay time is 18 seconds when the source diameter is 1 mm and 136 seconds when the source diameter is 4 mm. This is well within the time of the average temperature rise being maintained over the course of several minutes, such as 6 minutes or less. While the target tissue's temperature is raised, such as to approximately 10°C, very quickly, such as in a fraction of a second during the application of the energy source to the tissue, the relatively low duty cycle provides relatively long periods of time between the pulses of energy applied to the tissue and the relatively short pulse train duration ensure sufficient temperature diffusion and decay within a relatively short period of time comprising several minutes, such as 6 minutes or less, that there is no permanent tissue damage.

[Para 130] The parameters differ for the individual energy sources, including microwave, infrared lasers, radiofrequency and ultrasound, because the absorption properties of tissues differ for these different types of energy sources. The tissue water content can vary from one tissue type to another, however, there is an observed uniformity of the properties of tissues at normal

or near normal conditions which has allowed publication of tissue parameters that are widely used by clinicians in designing treatments. Below are tables illustrating the properties of electromagnetic waves in biological media, with Table 1 relating to muscle, skin and tissues with high water content, and Table 2 relating to fat, bone and tissues with low water content.

[Para 131] **Table 1.** Properties of Electromagnetic Waves in Biological Media: Muscle, Skin, and Tissues with High Water Content

Frequency (MHz)	Wavelength in Air (cm)	Dielectric Constant €H	Conductivity σH (mho/m)	Wavelength λH (cm)	Depth of Penetration (cm)	Reflection Coefficient: Air-Muscle Interface r	Air-Muscle Interface ø	Muscle-Fat Interface r	Muscle-Fat Interface ø
1	30000	2000	0.400	436	91.3	0.982	+179		
10	3000	160	0.625	118	21.6	0.956	+178		
27.12	1106	113	0.612	68.1	14.3	0.925	+177	0.651	-11.13
40.68	738	97.3	0.693	51.3	11.2	0.913	+176	0.652	-10.21
100	300	71.7	0.889	27	6.66	0.881	+175	0.650	-7.96
200	150	56.5	1.28	16.6	4.79	0.844	+175	0.612	-8.06
300	100	54	1.37	11.9	3.89	0.825	+175	0.592	-8.14
433	69.3	53	1.43	8.76	3.57	0.803	+175	0.562	-7.06
750	40	52	1.54	5.34	3.18	0.779	+176	0.532	-5.69
915	32.8	51	1.60	4.46	3.04	0.772	+177	0.519	-4.32
1500	20	49	1.77	2.81	2.42	0.761	+177	0.506	-3.66
2450	12.2	47	2.21	1.76	1.70	0.754	+177	0.500	-3.88
3000	10	46	2.26	1.45	1.61	0.751	+178	0.495	-3.20
5000	6	44	3.92	0,89	0.788	0.749	+177	0.502	-4.95
5800	5.17	43.3	4.73	0.775	0.720	0.746	+177	0.502	-4.29
8000	3,75	40	7.65	0.578	0.413	0.744	+176	0.513	-6.65
10000	3	39.9	10.3	0.464	0.343	0.743	+176	0.518	-5.95

[Para 132] **Table 2.** Properties of Electromagnetic Waves in Biological Media: Fat, Bone, and Tissues with Low Water Content

Frequency (MHz)	Wavelength in Air (cm)	Dielectric Constant €L	Conductivity σL, (mmho/m)	Wavelength λL (cm	Depth of Penetration (cm)	Reflection Coefficient: Air-Fat Interface r	Air-Fat Interface ø	Fat-Muscle Interface r	Fat-Muscle Interface ø
1	30000								
10	3000								
27.12	1106	20	10.9-43.2	241	159	0.660	+174	0.651	+169
40.68	738	14.6	12.6-52.8	187	118	0.617	+173	0.652	+170
100	300	7.45	19.1-75.9	106	60.4	0.511	+168	0.650	+172
200	150	5.95	25.8-94.2	59.7	39.2	0.458	+168	0.612	+172
300	100	5.7	31.6-107	41	32.1	0.438	+169	0.592	+172
433	69.3	5.6	37.9-118	28.8	26.2	0.427	+170	0.562	+173
750	40	5.6	49.8-138	16.8	23	0.415	+173	0.532	+174
915	32.8	5.6	55.6-147	13.7	17.7	0.417	+173	0.519	+176
1500	20	5.6	70.8-171	8.41	13.9	0.412	+174	0.506	+176
2450	12.2	5.5	96.4-213	5.21	11.2	0.406	+176	0.500	+176
3000	10	5.5	110-234	4.25	9.74	0.406	+176	0.495	+177
5000	6	5.5	162-309	2.63	6.67	0.393	+176	0.502	+175
5900	5.17	5.05	186-338	2.29	5.24	0.388	+176	0.502	+176
8000	3.75	4.7	255-431	1.73	4.61	0.371	+176	0.513	+173 -
10000	3	4.5	324-549	1.41	3.39	0.363	+175	0.518	+174,-

[Para 133] The absorption lengths of radiofrequency in body tissue are long compared to body dimensions. Consequently, the heated region is determined by the dimensions of the coil that is the source of the radiofrequency energy rather than by absorption lengths. Long distances r from a coil the magnetic (near) field from a coil drops off as $1/r^3$. At smaller distances, the electric and magnetic fields can be expressed in terms of the vector magnetic potential, which in turn can be expressed in closed form in terms of elliptic integrals of the first and second kind. The heating occurs only in a region that is comparable in size to the dimensions of the coil source itself. Accordingly, if it is desired to preferentially heat a region characterized by a radius, the source coil will be chosen to have a similar radius. The heating drops off very rapidly outside of a hemispherical region of radius because of the $1/r^3$ drop off of the magnetic field. Since it is proposed to use the radiofrequency the diseased tissue accessible only externally or from inner cavities, it is reasonable to consider a coil radii of between approximately 2 to 6 mm.

[Para 134] The radius of the source coil(s) as well as the number of ampere turns (NI) in the source coils give the magnitude and spatial extent of the magnetic field, and the radiofrequency is a factor that relates the magnitude of the electric field to the magnitude of the magnetic field. The heating is proportional to the product of the conductivity and the square of the electric field. For target tissues of interest that are near external or internal surfaces, the conductivity is that of skin and mucous tissue. The duty cycle of the pulse

train as well as the total train duration of a pulse train are factors which affect how much total energy is delivered to the tissue.

[Para 135] Preferred parameters for a radiofrequency energy source have been determined to be a coil radii between 2 and 6 mm, radiofrequencies in the range of 3-6 MHz, total pulse train durations of 0.2 to 0.4 seconds, and a duty cycle of between 2.5% and 5%. FIGS. 14-17 show how the number of ampere turns varies as these parameters are varied in order to give a temperature rise that produces an Arrhenius integral of approximately one or unity for HSP activation. With reference to FIG. 14, for an RF frequency of 6 MHz, a pulse train duration of between 0.2 and 0.4 seconds, a coil radius between 0.2 and 0.6 cm, and a duty cycle of 5%, the peak ampere turns (NI) is 13 at the 0.6 cm coil radius and 20 at the 0.2 cm coil radius. For a 3 MHz frequency, as illustrated in FIG. 15, the peak ampere turns is 26 when the pulse train duration is 0.4 seconds and the coil radius is 0.6 cm and the duty cycle is 5%. However, with the same 5% duty cycle, the peak ampere turns is 40 when the coil radius is 0.2 cm and the pulse train duration is 0.2 seconds. A duty cycle of 2.5% is used in FIGS. 16 and 17. This yields, as illustrated in FIG. 16, 18 amp turns for a 6 MHz radiofrequency having a coil radius of 0.6 cm and a pulse train duration of 0.4 seconds, and 29 amp turns when the coil radius is only 0.2 cm and the pulse train duration is 0.2 seconds. With reference to FIG. 17, with a duty cycle of 2.5% and a radiofrequency of 3 MHz, the peak ampere turns is 36 when the pulse train duration is 0.4 seconds and the coil radius is 0.6 cm, and 57 amp turns when the pulse train duration is 0.2 seconds and the coil radius is 0.2 cm.

[Para 136] The time, in seconds, for the temperature rise to decay from approximately 10°C to approximately 1°C for coil radii between 0.2 cm and 0.6 cm is illustrated for a radiofrequency energy source in FIG. 18. The temperature decay time is approximately 37 seconds when the radiofrequency coil radius is 0.2 cm, and approximately 233 seconds when the radiofrequency coil radius is 0.5 cm. When the radiofrequency coil radius is 0.6 cm, the decay time is approximately 336 seconds, which is still within the acceptable range of decay time, but at an upper range thereof.

[Para 137] Microwaves are another electromagnetic energy source which can be utilized in accordance with the present invention. The frequency of the microwave determines the tissue penetration distance. The gain of a conical microwave horn is large compared to the microwave wavelength, indicating under those circumstances that the energy is radiated mostly in a narrow forward load. Typically, a microwave source used in accordance with the present invention has a linear dimension on the order of a centimeter or less, thus the source is smaller than the wavelength, in which case the microwave source can be approximated as a dipole antenna. Such small microwave sources are easier to insert into internal body cavities and can also be used to radiate external surfaces. In that case, the heated region can be approximated by a hemisphere with a radius equal to the absorption length of the microwave in the body tissue being treated. As the microwaves are used to treat tissue near external surfaces or surfaces accessible from internal cavities, frequencies in

the 10-20 GHz range are used, wherein the corresponding penetration distances are only between approximately 2 and 4 mm.

[Para 138] The temperature rise of the tissue using a microwave energy source is determined by the average power of the microwave and the total pulse train duration. The duty cycle of the pulse train determines the peak power in a single pulse in a train of pulses. As the radius of the source is taken to be less than approximately 1 centimeter, and frequencies between 10 and 20 GHz are typically used, a resulting pulse train duration of 0.2 and 0.6 seconds is preferred.

[Para 139] The required power decreases monotonically as the train duration increases and as the microwave frequency increases. For a frequency of 10 GHz, the average power is 18 watts when the pulse train duration is 0.6 seconds, and 52 watts when the pulse train duration is 0.2 seconds. For a 20 GHz microwave frequency, an average power of 8 watts is used when the pulse train is 0.6 seconds, and can be 26 watts when the pulse train duration is only 0.2 seconds. The corresponding peak power are obtained from the average power simply by dividing by the duty cycle.

[Para 140] With reference now to FIG. 19, a graph depicts the average microwave power in watts of a microwave having a frequency of 10 GHz and a pulse train duration from between 0.2 seconds and 0.6 seconds. FIG. 20 is a similar graph, but showing the average microwave power for a microwave having a frequency of 20 GHz. Thus, it will be seen that the average microwave source power varies as the total train duration and microwave frequency vary.

The governing condition, however, is that the Arrhenius integral for HSP activation in the heated region is approximately 1.

[Para 141] With reference to FIG. 21, a graph illustrates the time, in seconds, for the temperature to decay from approximately 10°C to 1°C compared to microwave frequencies between 58 MHz and 20000 MHz. The minimum and maximum temperature decay for the preferred range of microwave frequencies are 8 seconds when the microwave frequency is 20 GHz, and 16 seconds when the microwave frequency is 10 GHz.

[Para 142] Utilizing ultrasound as an energy source enables heating of surface tissue, and tissues of varying depths in the body, including rather deep tissue. The absorption length of ultrasound in the body is rather long, as evidenced by its widespread use for imaging. Accordingly, ultrasound can be focused on target regions deep within the body, with the heating of a focused ultrasound beam concentrated mainly in the approximately cylindrical focal region of the beam. The heated region has a volume determined by the focal waist of the airy disc and the length of the focal waist region, that is the confocal parameter. Multiple beams from sources at different angles can also be used, the heating occurring at the overlapping focal regions.

[Para 143] For ultrasound, the relevant parameters for determining tissue temperature are frequency of the ultrasound, total train duration, and transducer power when the focal length and diameter of the ultrasound transducer is given. The frequency, focal length, and diameter determine the volume of the focal region where the ultrasound energy is concentrated. It is

the focal volume that comprises the target volume of tissue for treatment. Transducers having a diameter of approximately 5 cm and having a focal length of approximately 10 cm are readily available. Favorable focal dimensions are achieved when the ultrasound frequency is between 1 and 5 MHz, and the total train duration is 0.1 to 0.5 seconds. For example, for a focal length of 10 cm and the transducer diameter of 5 cm, the focal volumes are 0.02 cc at 5 MHz and 2.36 cc at 1 MHz.

[Para 144] With reference now to FIG. 22, a graph illustrates the average source power in watts compared to the frequency (between 1 MHz and 5 MHz), and the pulse train duration (between 0.1 and 0.5 seconds). A transducer focal length of 10 cm and a source diameter of 5 cm have been assumed. The required power to give the Arrhenius integral for HSP activation of approximately 1 decreases monotonically as the frequency increases and as the total train duration increases. Given the preferred parameters, the minimum power for a frequency of 1 GHz and a pulse train duration of 0.5 seconds is 5.72 watts, whereas for the 1 GHz frequency and a pulse train duration of 0.1 seconds the maximum power is 28.6 watts. For a 5 GHz frequency, 0.046 watts is required for a pulse train duration of 0.5 seconds, wherein 0.23 watts is required for a pulse train duration of 0.1 seconds. The corresponding peak power during an individual pulse is obtained simply by dividing by the duty cycle.

[Para 145] FIGURE 23 illustrates the time, in seconds, for the temperature to diffuse or decay from 10°C to 6°C when the ultrasound frequency is between 1

and 5 MHz. FIG. 24 illustrates the time, in seconds, to decay from approximately 10°C to approximately 1°C for ultrasound frequencies from 1 to 5 MHz. For the preferred focal length of 10 cm and the transducer diameter of 5 cm, the maximum time for temperature decay is 366 seconds when the ultrasound frequency is 1 MHz, and the minimum temperature decay is 15 seconds when the microwave frequency is 5 MHz. As the FDA only requires the temperature rise be less than 6°C for test times of minutes, the 366 second decay time at 1 MHz to get to a rise of 1°C over the several minutes is allowable. As can be seen in FIGS. 23 and 24, the decay times to a rise of 6°C are much smaller, by a factor of approximately 70, than that of 1°C.

[Para 146] FIGURE 25 illustrates the volume of focal heated region, in cubic centimeters, as compared to ultrasound frequencies from between 1 and 5 MHz. Considering ultrasound frequencies in the range of 1 to 5 MHz, the corresponding focal sizes for these frequencies range from 3.7 mm to 0.6 mm, and the length of the focal region ranges from 5.6 cm to 1.2 cm. The corresponding treatment volumes range from between approximately 2.4 cc and 0.02 cc.

[Para 147] Examples of parameters giving a desired HSP activation Arrhenius integral greater than 1 and damage Arrhenius integral less than 1 is a total ultrasound power between 5.8–17 watts, a pulse duration of 0.5 seconds, an interval between pulses of 5 seconds, with total number of pulses 10 within the total pulse stream time of 50 seconds. The target treatment volume would be approximately 1 mm on a side. Larger treatment volumes could be treatable by

an ultrasound system similar to a laser diffracted optical system, by applying ultrasound in multiple simultaneously applied adjacent but separated and spaced columns. The multiple focused ultrasound beams converge on a very small treatment target within the body, the convergence allowing for a minimal heating except at the overlapping beams at the target. This area would be heated and stimulate the activation of HSPs and facilitate protein repair by transient high temperature spikes. However, given the pulsating aspect of the invention as well as the relatively small area being treated at any given time, the treatment is in compliance with FDA/FCC requirements for long term (minutes) average temperature rise <1K. An important distinction of the invention from existing therapeutic heating treatments for pain and muscle strain is that there are no high T spikes in existing techniques, and these are required for efficiently activating HSPs and facilitating protein repair to provide healing at the cellular level.

[Para 148] The pulse train mode of energy delivery has a distinct advantage over a single pulse or gradual mode of energy delivery, as far as the activation of remedial HSPs and the facilitation of protein repair is concerned. There are two considerations that enter into this advantage:

[Para 149] First, a big advantage for HSP activation and protein repair in a PEMR energy delivery mode comes from producing a spike temperature of the order of 10°C. This large rise in temperature has a big impact on the Arrhenius integrals that describe quantitatively the number of HSPs that are activated and the rate of water diffusion into the proteins that facilitates protein repair. This

is because the temperature enters into an exponential that has a big amplification effect.

[Para 150] It is important that the temperature rise not remain at the high value (10°C or more) for long, because then it would violate the FDA and FCC requirements that over periods of minutes the average temperature rise must be less than 1°C (or in the case of ultrasound 6°).

[Para 151] An SDM or other PEMR mode of energy delivery uniquely satisfies both of these foregoing considerations by judicious choice of the power, pulse time, pulse interval, and the volume of the target region to be treated. The volume of the treatment region enters because the temperature must decay from its high value of the order of 10°C fairly rapidly in order for the long term average temperature rise not to exceed the long term FDA/FCC limit of 6°C for ultrasound frequencies and 1°C or less for electromagnetic radiation energy sources.

[Para 152] For a region of linear dimension L, the time that it takes the peak temperature to e-fold in tissue is roughly $L^2/16D$, where $D = 0.00143\ cm^2/sec$ is the typical heat diffusion coefficient. For example, if L=1 mm, the decay time is roughly 0.4 sec. Accordingly, for a region 1 mm on a side, a train consisting of 10 pulses each of duration 0.5 seconds, with an interval between pulses of 5 second can achieve the desired momentary high rise in temperature while still not exceeding an average long term temperature rise of 1°C. This is demonstrated further below.

[Para 153] The limitation of heated volume is the reason why RF electromagnetic radiation is not as good of a choice for treatment of regions deep with the body as ultrasound. The long skin depths (penetration distances) and Ohmic heating all along the skin depth results in a large heated volume whose thermal inertia does not allow both the attainment of a high spike temperature that activates HSPs and facilitates protein repair, and the rapid temperature decay that satisfies the long term FDA and FCC limit on average temperature rise.

[Para 154] Ultrasound has already been used to therapeutically heat regions of the body to ease pain and muscle strain. However, the heating has not followed the protocol of the invention and does not have the temperature spikes that are responsible for the excitation of HSPs.

[Para 155] Consider, then, a group of focused ultrasound beams that are directed at a target region deep within the body. To simplify the mathematics, suppose that the beams are replaced by a single source with a spherical surface shape that is focused on the center of the sphere. The absorption lengths of ultrasound can be fairly long. Table 3 below shows typical absorption coefficients for ultrasound at 1 MHz. The absorption coefficients are roughly proportional to the frequency.

[Para 156] **Table 3.** Typical absorption coefficients for 1 MHz ultrasound in body tissue:

Body Tissue	Attenuation Coefficient at 1 MHz (cm^{-1})
Water	0.00046
Blood	0.0415
Fat	0.145
Liver	0.115–0.217
Kidney	0.23
Muscle	0.3–0.76
Bone	1.15

[Para 157] Assuming that the geometric variation of the incoming radiation due to the focusing dominates any variation due to attenuation, the intensity of the incoming ultrasound at a distance r from the focus can be written approximately as:

$$I(r) = P/(4\pi r^2) \quad [1]$$

where P denotes the total ultrasound power.

The temperature rise at the end of a short pulse of duration t_p at r is then

$$dT(t_p) = P\alpha t_p / (4\pi C_v r^2) \quad [2]$$

where α is the absorption coefficient and C_v is the specific volume heat capacity. This will be the case until the r is reached at which the heat diffusion length at t_p becomes comparable to r, or the diffraction limit of the focused beam is reached. For smaller r, the temperature rise is essentially independent of r. As an example, suppose the diffraction limit is reached at a radial distance that is smaller than that determined by heat diffusion. Then

$$r_{dif} = (4Dt_p)^{1/2} \quad [3]$$

where D is the heat diffusion coefficient, and for $r<r_{dif}$, the temperature rise at t_p is

$$dT(r_{dif}, t_p) = 3P\alpha/(8\pi C_v D) \quad \text{when } r< r_{dif} \quad [4]$$

Thus, at the end of the pulse, we can write for the temperature rise:

$$dT_p(r) = \{P\alpha t_p/(4\pi C_v\}[(6/r_{dif}^2)U\{r_{dif}-r) + (1/r^2)U(r-r_{dif})] \quad [5]$$

On applying the Green's function for the heat diffusion equation,

$$G(r,t) = (4\Omega Dt)^{-3/2} \exp[-r^2/(4Dt)] \quad [6]$$

to this initial temperature distribution, we find that the temperature dT(t) at the focal point r=0 at a time t is

$$dT(t) = [dT_o/\{(1/2)+(\pi^{1/2}/6)\}][(1/2)(t_p/t)^{3/2} + (\pi^{1/2}/6)(t_p/t)] \quad [7]$$

with

$$dT_o = 3P\alpha/(8\pi C_v D) \quad [8]$$

[Para 158] A good approximation to eq. [7] is provided by:

$$dT(t) \approx dT_o (t_p/t)^{3/2} \quad [9]$$

as can be seen in FIG. 26, which is a comparison of eqs. [7] and [9] for $dT(t)/dT_o$ at the target treatment zone. The bottom curve is the approximate expression of eq [9].

The Arrhenius integral for a train of N pulses can now be evaluated with the temperature rise given by eq. [9]. In this expression,

$$dT_N(t) = \Sigma\, dT(t-nt_I) \quad [11]$$

where $dT(t-nt_I)$ is the expression of eq. [9] with t replaced by $t-nt_I$ and with t_I designating the interval between pulses.

[Para 159] The Arrhenius integral can be evaluated approximately by dividing the integration interval into the portion where the temperature spikes occur and the portion where the temperature spike is absent. The summation over the temperature spike contribution can be simplified by applying Laplace's end point formula to the integral over the temperature spike. In addition, the integral over the portion when the spikes are absent can be simplified by noting that the non-spike temperature rise very rapidly reaches an asymptotic value, so that a good approximation is obtained by replacing the varying time rise by its asymptotic value. When these approximations are made, eq. [10] becomes:

$$\Omega = AN[\{t_p(2k_BT_o^2/(3EdT_o)\}\exp[-(E/k_B)1/(T_o + dT_o + dT_N(Nt_l))] + \exp[-(E/k_B)1/(T_o + dT_N(Nt_l))]] \quad [12]$$

where

$$dT_N(Nt_l) \approx 2.5\ dT_o\ (t_p/t_l)^{3/2} \quad [13]$$

(The 2.5 in eq. [13] arises from the summation over n of $(N-n)^{-3/2}$ and is the magnitude of the harmonic number (N,3/2) for typical N of interest).

[Para 160] It is interesting to compare this expression with that for SDM applied to the retina. The first term is very similar to that from the spike contribution in the retina case, except that the effective spike interval is reduced by a factor of 3 for this 3D converging beam case. The second term, involving $dT_N(Nt_l)$ is much smaller than in the retina case. There the background temperature rise was comparable in magnitude to the spike temperature rise. But here in the converging beam case, the background temperature rise is much smaller by the ratio $(t_p/t_l)^{3/2}$. This points up the

importance of the spike contribution to the activation or production of HSP's and the facilitation of protein repair, as the background temperature rise which is similar to the rise in a continuous ultrasound heating case is insignificant compared to the spike contribution. At the end of the pulse train, even this low background temperature rise rapidly disappears by heat diffusion.

[Para 161] FIGURES 27 and 28 show the magnitude of the logarithm of the Arrhenius integrals for damage and for HSP activation or production as a function of dT_o for a pulse duration $t_p = 0.5$ sec, pulse interval $t_I = 10$ sec, and total number of pulses N = 10. Logarithm of Arrhenius integrals [eq. 12] for damage and for HSP activation as a function of the temperature rise in degrees Kelvin from a single pulse dT_o, for a pulse duration $t_p = 0.5$ sec., pulse interval $t_I = 10$ sec., and a total number of ultrasound pulses N = 10. FIG. 27 shows the logarithm of the damage integral with the Arrhenius constants $A = 8.71 \times 10^{33}$ sec^{-1} and $E = 3.55 \times 10^{-12}$ ergs. FIG. 28 shows the logarithm of the HSP activation integral with the Arrhenius constants $A = 1.24 \times 10^{27}$ sec^{-1} and $E = 2.66 \times 10^{-12}$ ergs. The graphs in FIGS. 27 and 28 show that Ω_{damage} does not exceed 1 until dT_o exceeds 11.3 K, whereas Ω_{hsp} is greater than 1 over the whole interval shown, the desired condition for cellular repair without damage.

[Para 162] Equation [8] shows that when $\alpha = 0.1$ cm^{-1}, a dT_o of 11.5 K can be achieved with a total ultrasound power of 5.8 watts. This is easily achievable. If α is increased by a factor of 2 or 3, the resulting power is still easily achievable. The volume of the region where the temperature rise is constant

(i.e. the volume corresponding to $r=r_d = (4Dt_p)^{1/2}$) is 0.00064 cc. This corresponds to a cube that is 0.86 mm on a side.

[Para 163] This simple example demonstrates that focused ultrasound should be usable to stimulate reparative HSP's deep in the body with easily attainable equipment:

Total ultrasound power:	5.8 watts – 17 watts
Pulse time	0.5 sec
Pulse interval	5 sec
Total train duration (N=10)	50 sec

To expedite the treatment of larger internal volumes, a SAPRA system can be used.

[Para 164] The pulsed energy source may be directed to an exterior of a body which is adjacent to the target tissue or has a blood supply close to the surface of the exterior of the body. Alternatively, a device may be inserted into a cavity of a body to apply the pulsed energy source to the target tissue. Whether the energy source is applied outside of the body or inside of the body and what type of device is utilized depends upon the energy source selected and used to treat the target tissue.

[Para 165] Photostimulation, in accordance with the present invention, can be effectively transmitted to an internal surface area or tissue of the body utilizing an endoscope, such as a bronchoscope, proctoscope, colonoscope or the like. Each of these consist essentially of a flexible tube that itself contains one or more internal tubes. Typically, one of the internal tubes comprises a light pipe

or multi-mode optical fiber which conducts light down the scope to illuminate the region of interest and enable the doctor to see what is at the illuminated end. Another internal tube could consist of wires that carry an electrical current to enable the doctor to cauterize the illuminated tissue. Yet another internal tube might consist of a biopsy tool that would enable the doctor to snip off and hold on to any of the illuminated tissue.

[Para 166] In the present invention, one of these internal tubes is used as an electromagnetic radiation pipe, such as a multi-mode optical fiber, to transmit the SDM or other electromagnetic radiation pulses that are fed into the scope at the end that the doctor holds. With reference now to FIG. 29, a light generating unit 10, such as a laser having a desired wavelength and/or frequency is used to generate electromagnetic radiation, such as laser light, in a controlled, pulsed manner to be delivered through a light tube or pipe 52 to a distal end of the scope 54, illustrated in FIG. 30, which is inserted into the body and the laser light or other radiation 56 delivered to the target tissue 58 to be treated.

[Para 167] The light generator unit 10 of FIG. 29 could comprise the light generator units discussed above with respect to FIGS. 1-6. The delivery device or component, however could comprise an endoscope, bronchoscope, with the generated laser light beam passed through a light tube or pipe 52. The system could include both a laser beam projector or delivery device, such as a scope, as well as a viewing system/camera will comprise two different components in use. The viewing system/camera could provide feedback to a display monitor which may also include the necessary computerized hardware, data input and

controls, for manipulating the optics, delivered laser light or other pulsed energy source and/or the projection/viewing components. Moreover, patterns can be generated which may be offset, as described above. Of course, the laser light generating systems of FIGS. 1-6 are exemplary, and other devices and systems can be utilized to generate a source of laser light or other pulsed electromagnetic radiation which can be operably passed through a projector device, such as the endoscope or light pipe or the like illustrated in FIGS. 29 and 30.

[Para 168] Other forms of electromagnetic radiation may also be generated and used, including ultraviolet waves, microwaves, other radiofrequency waves, and laser light at predetermined wavelengths. Moreover, ultrasound waves may also be generated and used to create a thermal time-course temperature spike in the target tissue sufficient to activate or produce heat shock proteins in the cells of the target tissue without damaging the target tissue itself. In order to do so, typically, a pulsed source of ultrasound or electromagnetic radiation energy is provided and applied to the target tissue in a manner which raises the target tissue temperature, such as between 6°C and 11°C, transiently while only 6°C or 1°C or less for the long term, such as over several minutes.

[Para 169] For deep tissue that is not near an internal orifice, a light pipe is not an effective means of delivering the pulsed energy. In that case, pulsed low frequency electromagnetic energy or preferably pulsed ultrasound can be used to cause a series of temperature spikes in the target tissue.

[Para 170] Thus, in accordance with the present invention, a source of pulsed ultrasound or electromagnetic radiation is applied to the target tissue or fluid in order to stimulate HSP production or activation and to facilitate protein repair in the living animal tissue. In general, electromagnetic radiation may be ultraviolet waves, microwaves, other radiofrequency waves, laser light at predetermined wavelengths, etc. On the other hand, if electromagnetic energy is to be used for deep tissue targets away from natural orifices, absorption lengths restrict the wavelengths to those of microwaves or radiofrequency waves, depending on the depth of the target tissue. However, ultrasound is to be preferred to long wavelength electromagnetic radiation for deep tissue targets away from natural orifices.

[Para 171] The ultrasound or electromagnetic radiation is pulsed so as to create a thermal time-course in the tissue that stimulates HSP production or activation and facilitates protein repair without causing damage to the cells and tissue being treated. The area and/or volume of the treated tissue is also controlled and minimized so that the temperature spikes are on the order of several degrees, e.g. approximately 10°C, while maintaining the long-term rise in temperature to be less than the FDA mandated limit, such as 1°C. It has been found that if too large of an area or volume of tissue is treated, the increased temperature of the tissue cannot be diffused sufficiently quickly enough to meet the FDA requirements. However, limiting the area and/or volume of the treated tissue as well as creating a pulsed source of energy accomplishes the goals of the present invention of stimulating HSP activation or production by

heating or otherwise stressing the cells and tissue, while allowing the treated cells and tissues to dissipate any excess heat generated to within acceptable limits.

[Para 172] It is believed that stimulating HSP production in accordance with the present invention can be effectively utilized in treating a wide array of tissue abnormalities, ailments, and even infections. For example, the viruses that cause colds primarily affect a small port of the respiratory epithelium in the nasal passages and nasopharynx. Similar to the retina, the respiratory epithelium is a thin and clear tissue. With reference to FIG. 31, a cross-sectional view of a human head 60 is shown with an endoscope 54 inserted into the nasal cavity 62 and energy 56, such as laser light or the like, being directed to tissue 58 to be treated within the nasal cavity 62. The tissue 58 to be treated could be within the nasal cavity 62, including the nasal passages, and nasopharynx.

[Para 173] To assure absorption of the laser energy, or other energy source, the wavelength can be adjusted to an infrared (IR) absorption peak of water, or an adjuvant dye can be used to serve as a photosensitizer. In such a case, treatment would then consist of drinking, or topically applying, the adjuvant, waiting a few minutes for the adjuvant to permeate the surface tissue, and then administering the laser light or other energy source 56 to the target tissue 58 for a few seconds, such as via optical fibers in an endoscope 54, as illustrated in FIG. 31. To provide comfort of the patient, the endoscope 54 could be inserted after application of a topical anesthetic. If necessary, the procedure could be repeated periodically, such as in a day or so.

[Para 174] The treatment would elevate intracellular temperatures, and this temperature elevation in itself would be anti-viral in the same way as the fever response to viral infections is anti-viral. In addition, treatment would thermally stimulate the activation or production of heat shock proteins and facilitate protein repair without damaging the cells and tissues being treated. As discussed above, certain heat shock proteins have been found to play an important role in the immune response as well as the well-being of the targeted cells and tissue. The source of energy could be monochromatic laser light, such as 810 nm wavelength laser light, administered in a manner similar to that described in the above-referenced patent applications, but administered through an endoscope or the like, as illustrated in FIG. 31. The adjuvant dye would be selected so as to increase the laser light absorption. While this comprises a particularly preferred method and embodiment of performing the invention, it will be appreciated that other types of energy and delivery means could be used to achieve the same objectives in accordance with the present invention.

[Para 175] With reference now to FIG. 32, a similar situation exists for other illnesses or diseases, where the primary target is the epithelium of the upper respiratory tree, in segments that have diameters greater than about 3.3 mm, namely, the upper six generations of the upper respiratory tree. A thin layer of mucous separates the targeted epithelial cells from the airway lumen, and it is in this layer that the antigen-antibody interactions occur that result in inactivation of viruses, such as cold and flu viruses.

[Para 176] With continuing reference to FIG. 32, the flexible light tube 52 of a bronchoscope 54 is inserted through the individual's mouth 64 through the throat and trachea 66 and into a bronchus 68 of the respiratory tree. There the laser light or other energy source 56 is administered and delivered to the tissue in this area of the uppermost segments to treat the tissue and area in the same manner described above with respect to FIG. 32. It is contemplated that a wavelength of laser or other energy would be selected so as to match an IR absorption peak of the water resident in the mucous to heat the tissue and stimulate HSP activation or production and facilitate protein repair, with its attendant benefits.

[Para 177] With reference now to FIG. 33, a colonoscope 54 could have flexible optical tube 52 thereof inserted into the anus and rectum 70 and into either the large intestine 72 or small intestine 74 so as to deliver the selected laser light or other energy source 56 to the area and tissue to be treated, as illustrated. This could be used to assist in treating colon cancer as well as other gastrointestinal issues.

[Para 178] Typically, the procedure could be performed similar to a colonoscopy in that the bowel would be cleared of all stool, and the patient would lie on his/her side and the physician would insert the long, thin light tube portion 52 of the colonoscope 54 into the rectum and move it into the area of the colon, large intestine 72 or small intestine 74 to the area to be treated. The physician could view through a monitor the pathway of the inserted flexible member 52 and even view the tissue at the tip of the

colonoscope 54 within the intestine, so as to view the area to be treated. Using one of the other fiber optic or light tubes, the tip 76 of the scope would be directed to the tissue to be treated and the source of laser light or other radiation 56 would be delivered through one of the light tubes of the colonoscope 54 to treat the area of tissue to be treated, as described above, in order to stimulate HSP activation or production in that tissue 58.

[Para 179] With reference now to FIG. 34, another example in which the present invention can be advantageously used in the GI tract, for example what is frequently referred to as "leaky gut" syndrome, a condition of the gastrointestinal (GI) tract marked by inflammation and other metabolic dysfunction. Since the GI tract is susceptible to metabolic dysfunction similar to the retina, it is anticipated that it will respond well to the treatment of the present invention. This could be done by means of subthreshold, diode micropulsed laser (SDM) treatment, as discussed above, or by other energy sources and means as discussed herein and known in the art.

[Para 180] With continuing reference to FIG. 34, the flexible light tube 52 of an endoscope or the like is inserted through the patient's mouth 64 through the throat and trachea area 66 and into the stomach 78, where the tip or end 64 thereof is directed towards the tissue 58 to be treated, and the laser light or other energy source 56 is directed to the tissue 58. It will be appreciated by those skilled in the art that a colonoscope could also be used and inserted through the rectum 70 and into the stomach 78 or any tissue between the stomach and the rectum.

[Para 181] If necessary, a chromophore pigment or other light-absorbing material such as metallic nanoparticles could be delivered to the GI tissue orally to enable absorption of the radiation. If, for instance, unfocused 810 nm radiation from a laser diode or LED were to be used, the pigment would have an absorption peak at or near 810 nm. Alternatively, the wavelength of the energy source could be adjusted to a slightly longer wavelength at an absorption peak of water, so that no externally applied chromophore would be required.

[Para 182] It is also contemplated by the present invention that a capsule endoscope 80, such as that illustrated in FIG. 35, could be used to administer the radiation and energy source in accordance with the present invention. Such capsules are relatively small in size, such as approximately one inch in length, so as to be swallowed by the patient. As the capsule or pill 80 is swallowed and enters into the stomach and passes through the GI tract, when at the appropriate location, the capsule or pill 80 could receive power and signals, such as via antenna 82, so as to activate the source of energy 84, such as a laser diode and related circuitry, with an appropriate lens 86 focusing the generated laser light or radiation through a radiation-transparent cover 88 and onto the tissue to be treated. It will be understood that the location of the capsule endoscope 80 could be determined by a variety of means such as external imaging, signal tracking, or even by means of a miniature camera with lights through which the doctor would view images of the GI tract through which the pill or capsule 80 was passing through at the time. The capsule or pill 80 could be supplied with its own power source, such as by virtue of a battery,

or could be powered externally via an antenna, such that the laser diode 84 or other energy generating source create the desired wavelength and pulsed energy source to treat the tissue and area to be treated.

[Para 183] As in the treatment of the retina in previous applications, the radiation would be pulsed to take advantage of the micropulse temperature spikes and associated safety, and the power could be adjusted so that the treatment would be completely harmless to the tissue. This could involve adjusting the peak power, pulse times, and repetition rate to give spike temperature rises on the order of 10°C, while maintaining the long term rise in temperature to be less than the FDA mandated limit of 1°C. If the pill form 80 of delivery is used, the device could be powered by a small rechargeable battery or over wireless inductive excitation or the like. The heated/stressed tissue would stimulate activation or production of HSP and facilitate protein repair, and the attendant benefits thereof.

[Para 184] From the foregoing examples, the technique of the present invention is limited to the treatment of conditions at near body surfaces or at internal surfaces easily accessible by means of fiber optics or other optical delivery means. The reason that the application of SDM or PEMR to activate HSP activity is limited to near surface or optically accessibly regions of the body is that the absorption length of IR or visible radiation in the body is very short. However, there are conditions deeper within tissue or the body which could benefit from the present invention. Thus, the present invention contemplates the use of ultrasound and/or radio frequency (RF) and even shorter wavelength

electromagnetic (EM) radiation such as microwave which have relatively long absorption lengths in body tissue. The use of pulsed ultrasound is often preferable to RF electromagnetic radiation to activate remedial HSP activity in abnormal tissue that is inaccessible to surface SDM or the like. Pulsed ultrasound sources can also be used for abnormalities at or near surfaces as well.

[Para 185] With reference now to FIG. 36, with ultrasound, microwave or RF, a specific region deep in the body can be specifically targeted by using one or more beams that are each focused on the target site. The pulsating heating will then be largely only in the targeted region where the beams are focused and overlap.

[Para 186] As illustrated in FIG. 36, an ultrasound transducer 90 or the like generates a plurality of ultrasound beams 92 which are coupled to the skin via an acoustic-impedance-matching gel, and penetrate through the skin 94 and through undamaged tissue in front of the focus of the beams 92 to a target organ 96, such as the illustrated liver, and specifically to a target tissue 98 to be treated where the ultrasound beams 92 are focused. As mentioned above, the pulsating heating will then only be at the targeted, focused region 98 where the focused beams 92 overlap. The tissue in front of and behind the focused region 98 will not be heated or affected appreciably.

[Para 187] The present invention contemplates not only the treatment of surface or near surface tissue, such as using the laser light or the like, deep tissue using, for example, focused ultrasound, RF, or microwave beams or the

like, but also treatment of blood diseases, and other bodily fluid diseases, such as sepsis. As indicated above, focused ultrasound treatment could be used both at surface as well as deep body tissue, and could also be applied in this case in treating blood. However, it is also contemplated that the SDM and similar PEMR treatment options which are typically limited to surface or near surface treatment of epithelial cells and the like be used in treating blood or fluid diseases at areas where the blood or fluid is accessible through a relatively thin layer of tissue, such as the earlobe.

[Para 188] With reference now to FIGS. 37 and 38, treatment of blood disorders simply requires the transmission of SDM or other electromagnetic radiation or ultrasound pulses to the earlobe 100, where the SDM or other radiation source of energy could pass through the earlobe tissue and into the blood which passes through the earlobe. It would be appreciated that this approach could also take place at other areas of the body where the blood flow is relatively high and/or near the tissue surface, such as fingertips, inside of the mouth or throat, etc.

[Para 189] With reference again to FIGS. 37 and 38, an earlobe 100 is shown adjacent to a clamp device 102 configured to transmit SDM radiation or the like. This could be, for example, by means of one or more laser diodes 104 which would transmit the desired frequency at the desired pulse and pulse train to the earlobe 100. Power could be provided, for example, by means of a lamp drive 106. Alternatively, the lamp drive 106 could be the actual source of laser light, which would be transmitted through the appropriate optics and

electronics to the earlobe 100. The clamp device 102 would merely be used to clamp onto the patient's earlobe and cause that the radiation be constrained to the patient's earlobe 100. This may be by means of mirrors, reflectors, diffusers, etc. This could be controlled by a control computer 108, which would be operated by a keyboard 110 or the like. The system may also include a display and speakers 112, if needed, for example if the procedure were to be performed by an operator at a distance from the patient.

[Para 190] As mentioned above, although FIGS. 37 and 38 illustrate, for exemplary purposes, the treatment of a bodily fluid, namely blood, through a readily accessible external earlobe 100, it will be appreciated that the pulsed energy source of the present invention can be applied to other external areas of the body, internal areas of the body, and utilize a wide variety of energy sources, including laser light, radiofrequency, microwave, and ultrasound. Moreover, the present invention is not only limited to the treatment of blood and blood diseases, but can also be applied to other bodily fluids, such as lymph fluid, etc. The type of bodily fluid treated may dictate the area where the treatment occurs, such as applying the energy source in an armpit, tonsil, etc. when treating lymph fluid.

[Para 191] Although not specifically described above, it will be appreciated that various diseases or potential diseases could be treated in various areas of the body, depending upon the disease and the target tissue to be treated either for treatment purposes or for prophylactic or protective therapy. For example, IPF may be treated by PEMR infrared laser locally via bronchoscopic application.

Heart disease, due to the heart being located near the bronchial tree and lungs, could also be treated via bronchoscopy. Alternatively, as infrared absorption lengths are small, as indicated above, PEMR radiofrequency, ultrasound or microwave may be used to treat the heart, lungs, etc. An additional advantage would be not requiring the discomfort of a bronchoscope being inserted into the lungs of the patient.

[Para 192] Once again, the selected treatment type and operating procedure and parameters could change depending upon the location of the chronic progressive disease. For example, Alzheimer disease may be treated by RF or microwave application to the brain. A person having cancer, or a risk for cancer, could have the energy source in accordance with the present invention applied to the organ(s) or area of the body in question, whether it be a tissue or blood (generally not the cancer itself, as activation of HSPs in cancer cells may enhance the survival and growth of the cancer; but to treat components of the immune system to enhance their effectiveness against the cancer). Even mental conditions, such as depression, could potentially be treated in accordance with the present invention.

[Para 193] The present invention also contemplates that the time course, and possibly powers, and other energy and operating parameters may need to be changed depending upon the tissue, organ, or area of the body to be treated. For example, for idiopathic pulmonary fibrosis and other lung diseases, such parameters may need to be changed due to the convective air flow which can cool the lung tissue. Having the individual exhale and hold his or her breath for

a couple of seconds can also alter these energy parameters as an inflated lung has a conductivity of 0.2 S/m while a deflated lung has a conductivity twice as large, 0.41 S/m, and the absorption length is inversely proportional to the square root of the conductivity. The important aspect is that the tissue or bodily fluid is heated very quickly up to approximately 11°C while maintaining a much lower temperature, such as below 6°C or even 1°C over several minutes, such as 6 minutes. This will provide the therapeutic benefit, such as activating HSPs, while not damaging the bodily fluid, cells and tissue.

[Para 194] With reference now to FIG. 39, it is contemplated by the present invention that some diseases or risk of diseases may require treatment of multiple areas of the body. For example, diabetes may be treated by microwave, RF application or the like to many areas of the body, and potentially the entire body. Also, the individual may either have multiple chronic progressive diseases or may be at a risk of having multiple chronic progressive diseases which could require treatment of various areas of the body. Furthermore, since the process of treatment in accordance with the present invention appears to have only beneficial therapeutic and protective consequences, without permanently damaging or destroying cells or tissue, the entire body could be treated as healthy cells and tissue would not be negatively impacted by the application of the pulsed energy source applied in accordance with the present invention while those that are damaged would be benefitted.

[Para 195] Accordingly, with continuing reference to FIG. 39, a device 114 is contemplated by the present invention which can hold and/or support an entire

body 116, such as by means of a platform 118 upon which the individual lies. It will be understood, however, that the individual could be in different positions, such as standing, and not necessarily need to lie down. The device 114 would include a pulsed energy emitter 120 which could emit a pulsed energy source having the parameters discussed above so as to treat various types of tissue, organs, bodily fluids, etc. of the individual. This could be, for example, by means of microwave, radiofrequency (RF) and/or ultrasound, or even light sources used to treat external portions of the individual's body or bodily fluids passing adjacent to such surfaces. The fluid, organs in question or other tissue could be treated accordingly. In fact, as mentioned above, the entire body could be treated as the emitter 120 is moved, such as along track 122, to different areas of the body, either progressively or in a predetermined pattern, in such a manner so as to fairly quickly treat the desired areas of target tissue or target bodily fluid and/or the entire body by heating up the areas to the predetermined temperature while maintaining the predetermined lower temperature over a more prolonged period of time. The whole body treatment could be a sum of the localized treatments. This could be a way, for example, to treat diabetes and other similar diseases which affect the entire body or multiple areas of the body. This could also be, for example, a system and method for protectively and prophylactically treating the whole body of an individual, such as on a period basis.

[Para 196] The proposed treatment with a train of electromagnetic or ultrasound pulses has two major advantages over earlier treatments that

incorporate a single short or sustained (long) pulse. First, the short (preferably subsecond) individual pulses in the train activate cellular reset mechanisms like HSP activation with larger reaction rate constants than those operating at longer (minute or hour) time scales. Secondly, the repeated pulses in the treatment provide large thermal spikes (on the order of 10,000) that allow the cell's repair system to more rapidly surmount the activation energy barrier that separates a dysfunctional cellular state from the desired functional state. The net result is a "lowered therapeutic threshold" in the sense that a lower applied average power and total applied energy can be used to achieve the desired treatment goal.

[Para 197] The present invention has been found to also prevent or treat neurodegenerative diseases, including Alzheimer's disease. It is determined that an individual has a neurodegenerative disease, such as Alzheimer's, or is at a risk of developing a neurodegenerative disease. This could be determined, for example, by genetic testing, cognitive testing, blood or cerebral spinal fluid testing, inheritance determinations, or any other available test which could lead a medical professional to determine that the individual either has a neurodegenerative disease or is at risk of developing a neurodegenerative disease.

[Para 198] A pulsed electromagnetic energy, typically either radiofrequency or microwave, having selected energy parameters, including wavelength or frequency, duty cycle and pulse train duration, is provided and applied to the brain of the individual so as to prevent or treat the neurodegenerative disease. The pulsed electromagnetic energy may be directed to one or more of a leaky

blood-brain barrier, inflamed portions of the brain, junk proteins of the brain, beta amyloid proteins of the brain, or tangled tau proteins of the brain, or any other portion of the brain, brain tissue, or cerebral spinal fluid or the like to provide treatment. The energy parameters and application parameters may be selected to either create thermal interactions with such tissue, proteins or other molecules, or resonant interactions.

[Para 199] The pulsed energy could be applied to the individual's brain tissue by means of the device 114 illustrated in FIG. 39, which would selectively apply the pulsed energy just to the brain or area of interest of the patient 116. Other devices or means of applying the pulsed energy are also contemplated by the present invention, such as disposing a plurality of spaced-apart transmitters 124 disposed adjacent to a head 126 of the individual to be treated, as illustrated in FIGS. 40 and 41. The invention contemplates using a single electromagnetic emitter which would emit the electromagnetic energy, such as radiofrequency or microwave energy, to the individual's brain, through his or her head, and moving the emitter, as necessary.

[Para 200] However, the "head cap" 130 having an array of emitters 124 interconnected by electrical leads 128 which can be placed over or on the head of the individual is particularly convenient as it is easily worn and places the emitters 124 in close proximity to the brain 136. The head cap 130 illustrated in FIG. 40 has eight emitters 124, although the number, size, and configuration can be adjusted as needed. Preferably, the emitters 124 are sufficiently spaced apart from one another such that the electromagnetic energy 134 emitted by

the emitters 124 do not overlap. The configuration of the emitters 124 in the head cap 130 illustrated in FIGS. 40 and 41 could be used to treat substantially the entire brain of the individual. However, it may be more desirable to treat only a portion of the brain, and thus a head cap of a different configuration with a different number of emitters could be utilized, or some emitters 124 could be deactivated, as deemed necessary.

[Para 201] A power and control device 132 could be operably connected to the head cap 130 and/or emitters 124. The control box 132 could provide the power necessary for the emitters 124 to emit their electromagnetic waves, and could also include electronics so as to control the intensity, timing, and the like of the emitters 124. It will be understood that the control box 132 could vary in size depending upon power and control requirements. When the emitters 124 are to emit relatively large frequencies and/or power, the control and power device 132 may be somewhat large and substantially non-portable. However, in other cases the power and control device 132 could be quite small and be carried by the user to allow the user to be mobile during treatment.

[Para 202] In accordance with an embodiment of the invention, the pulsed energy parameters are selected so as to raise a temperature of treated tissue sufficiently to stimulate heat shock protein activation in the treated tissue or fluid. For example, the pulsed energy may comprise a radiofrequency between 3 to 6 megahertz, a duty cycle between 2.5% and 5.0% and a pulse train duration between 0.2 and 0.4 seconds. The radiofrequency may be generated with a coil having a radii between 2 mm and 6 mm. The coil may have between

13 and 45 amp turns. With such parameters, the pulsed energy would raise the temperature of the treated tissue sufficiently to stimulate heat shock protein activation in the treated tissue or fluid, which would result in protein or cellular repair so as to provide effective treatment.

[Para 203] Recently, a non-invasive electromagnetic treatment, more particularly a transcranial electromagnetic treatment (TEMT) has been found to provide statistically significant improvement in the individual's cognitive enhancement, changes to cerebral spinal fluid and blood markers for Alzheimer's disease, and evidence of enhanced brain connectivity.

[Para 204] In accordance with the treatment, a head cap 130 having a plurality of electromagnetic energy coils 124, such as radiofrequency coils, is placed on the individual's head and each transmitter transmits a radiofrequency field between 850-950 megahertz, and more particularly 915 megahertz, every 4 to 5 milliseconds, such as every 4.6 milliseconds, providing a pulse repetition frequency of 217 Hz. As illustrated in FIG. 41, the emitter coils 124 are spaced sufficiently far apart that their fields 134 extend through the individual's skull and into the brain tissue 136, but the fields do not substantially overlap or more preferably do not overlap. The power level of each emitter is set so that the specific absorption rate (SAR) in the brain is between 1.0 and 2.0 W/kg. The pulsed energy is applied to the individual's brain for multiple, spaced-apart treatments each day. For example, the patient could be treated for one hour period in the morning and another hour period in the afternoon. Such treatment is applied in such a manner over a prolonged period of time,

comprising weeks or even months. For example, the treatment could occur for a period of sixty days.

[Para 205] Various tests performed before and after treatment have indicated a statistically significant improvement to the individual. These tests include cognitive tests, human phosphor-tau (p-tau) and total tau determination, human amyloid beta determination, and PET and functional MRI scanning of the brain. Treatment shows statistically significant improvements in ADAS-COG, increases in cerebral spinal fluid levels of amyloid beta and decreased levels of CSF p-tau protein/amyloid beta ratio, and reduced levels of oligometric amyloid beta in plasma. Enhanced glucose utilization and increased functional connectivity in the brain has also been found.

[Para 206] The amount of power delivered to the brain by the radiofrequency emitters is quite low, and would probably not significantly increase the brain tissue temperature. As a rough estimate of the expected temperature rise, consider the balance between the SAR of 1.0 W/kg delivered to the brain tissue by the electromagnetic fields to the heat removed by blood flow to the brain. About 15% of the cardiac output is supplied to the brain: in the adult this amounts to 750 milliliters per minute. This amounts to a cerebral blood flow of 50 ml per 100 g per min. The blood flow of 50 ml per 100 g per minute is tantamount to a residence time of the blood of about 2 minutes. This is the time Δt over which the SAR has the opportunity to raise the temperature.

[Para 207] The temperature rise ΔT during that time will be given roughly by:

$$C_v dT/dt = SAR\rho \quad [14]$$

i.e.

$$\Delta T = SAR\rho(\Delta t/C_v) \quad [15]$$

where ρ denotes the density.

[Para 208] The specific heat capacity of brain tissue is 3630 joules/kg/degC , compared to 4178 joules/kg/degC for water and ρ is about 1 gm/cc.

[Para 209] Equation [15] then gives:

$$\Delta T \approx 0.03\ ^{o}C \quad [16]$$

[Para 210] The temperature rise is very small indeed, much less than the rise in temperatures required for heat shock protein activation in the embodiments described above.

[Para 211] Notwithstanding the small field intensities and power, the pulsed electromagnetic fields are able to penetrate into the brain, as shown below.

[Para 212] The skin depth δ of penetration of an electromagnetic field of angular frequency ω into a medium of conductivity σ and magnetic permeability μ is:

$$\delta = [2/\mu\omega\sigma]^{1/2} \quad [17]$$

[Para 213] The conductivity of brain tissue is:

$$\sigma = 0.3300\ S/m \quad [18]$$

[Para 214] For 915 MHz and $\mu = 4\pi 10^{-7}$ MKS, this gives:

$$\delta = 2.9\ cm \quad [19]$$

[Para 215] Thus, the top layer of the cerebral cortex is subjected to the TEMT fields.

[Para 216] The wavelength of a 915 Hz field is:

$$\lambda = 3x10^{10}/915x10^{6} = 32.8 \text{ cm} \quad [20]$$

[Para 217] Hence, since the wavelength is much larger than the penetration depth into the brain, the fields in the cortex from the coils are induction (near) fields.

[Para 218] The induction electric field from a coil can be obtained from the azimuthal vector potential A:

$$E = -i\omega A \quad [21]$$

[Para 219] An integral expression for A from a coil of radius a carrying a current I is given by:

$$A[r,z] = (\mu I/2)\int a\cos\varphi d\varphi[a^2 + r^2 + z^2 - 2ar\cos\varphi]^{-1/2} \quad [22]$$

where the integral is from 0 to π, and r and z are the radius and axial distance in cylindrical coordinates.

[Para 220] When the loop is small compared to the distance to the field point, this expression reduces to:

$$A[r,z] = (\mu I r a^2/(r^2+z^2)^{3/2} \quad [23]$$

[Para 221] From eq. [23], it is easy to see that the induction E field from the coil will penetrate along the axis about a distance equal to the radius of the coil and will extend in the radial direction a distance comparable to the coil radius. Thus, it can be seen that the induction electric fields penetrate into the brain as well as the electromagnetic waves.

[Para 222] The E field can be estimated and the mechanical effect of E can also be calculated. In a medium of electrical conductivity σ, the SAR is given by the expression:

$$SAR\ \rho = \sigma E^2 \quad [24]$$

where ρ is the density. For $\rho = 1000\ kg/m^3$, this gives an electric field of:

$$E = 55\ V/m \quad [25]$$

[Para 223] The stress energy tensor corresponding to the electric field is:

$$T = (E^2/2)[\varepsilon + \sigma/i\omega]\ \ Newtons/m^2 \quad [26]$$

[Para 224] For 915 MHz, σ=0.33 S/m, and $\varepsilon = 80\ /(36\pi 10^9)$,

$$T \approx 10^{-6}\ N/m^2 \quad [27]$$

[Para 225] Notably, this is much smaller than any molecular forces.

[Para 226] The maximum induced charge densities, as well as the effects of E fields on membranes can be calculated or estimated according to the following.

[Para 227] The current density j from the induced electric field E is:

$$J = \sigma E \quad [28]$$

[Para 228] Thus, the maximum possible surface charge density that it can deliver to a surface is:

$$\Sigma = (i\omega)^{-1}\ \sigma E \quad [29]$$

[Para 229] At 915 MHz, and with σ= 0.33 S/m and E = 55 V/m, this gives:

$$\Sigma = 3.16\ x10^{-9}\ coulombs/m^2 \quad [30]$$

[Para 230] The nominal surface density of charges in a solid is 16 coulombs/m^2, so the induced charge densities are much less than the naturally occurring densities.

[Para 231] The capacitance of a cellular membrane is of the order of:

$$C = 10 \text{ mF/m}^2 \quad [31]$$

[Para 232] We can estimate the voltage v across the membrane due to the current density of eq. [28] from the equation:

$$i\omega Cv = \sigma E \quad [32]$$

[Para 233] For 915 MHz and $C = 10$ mF/m^2, $\sigma = 0.22$ S/m, and $E = 55$ V/m. we find:

$$v = 1.3\text{x}10^{-6} \text{ volts} \quad [33]$$

[Para 234] Notably, this is much less than the nominal naturally occurring (10's - 100) mV membrane potentials.

[Para 235] Notwithstanding the relatively low frequency and power level, the emitters 124, as illustrated in FIGS. 40 and 41 collectively provide both global and penetrating TEMT to the human forebrain, including the cerebral cortex and underlying structures of the brain. The success of the treatment, in this embodiment, is not due to a thermal effect. The successful treatment also does not appear to be due to large induced electric fields, induced charge or current densities, mechanical stresses, or appreciable changes in membrane potentials. Instead, it appears that the radiofrequency, or other pulsed energy, is directly acting on the biomolecules in the cells. From the magnitudes of the fields in the induced charge and current densities, it appears that the effect would most likely involve a resonance interaction with a collective mode. The calculations suggest that the very low intensity electric fields of appropriate frequencies can be considerably amplified by pi electrons in biomolecular complexes. The

TEMT can be used to prevent or even reverse both oligomeric and insoluble amyloid-beta aggregation, both inside and outside neurons. The TEMT cannot only disaggregate amyloid-beta oligomers, but also disaggregate tau and α-synuclein oligomers. It is believed that this is due to the excitation of resonant cooperative oscillations within the brain cells.

[Para 236] To interact with the induced electric fields of TEMT, the resonant cooperative oscillations would have to involve charges. Research and calculations suggest that the charges are electrons in the biomolecules, and not ions. Radiofrequencies fall within 20 KHz - 300 GHz and 300 MHz - 300 GHz for microwaves. A rough description of the central frequencies for RF and microwaves is 5 MHz - 300 GHz. There are resonances in the beta amyloid in the 1 GHz -30 GHz range of frequencies, which lower range is close to the 850 MHz -950 MHz considered herein. Resonances have been observed in these radiofrequency/microwave frequency ranges.

[Para 237] From the foregoing, however, it has been found that the induced electric fields appear to be very small compared to the naturally occurring cellular fields. The associated current densities appear to be much less than normal occurrence. Induced mechanical stresses seem much less than those associated with molecular forces. The interfacial charges induced appear to be very small compared to naturally occurring charges. However, as indicated above, and as more fully shown below, the resonant frequencies of relevant biomolecules depend on: electron density, whether the electrons are conducting or insulating, the shape of the region containing the electrons, and

the surrounding dielectric of the relevant biomolecules that are present in the brains of people that have Alzheimer's or a risk of developing Alzheimer's.

[Para 238] A crude Drude model, as more detailed below, has led to the conclusion that the charges involved are electrons within the biomolecules in and around the brain, rather than ions in the electrolytes internal or external to the brain cells. The Drude model, as indicated below, shows that resonances exist at frequencies where considerable amplification of the applied fields can occur. The large amplification can occur only for electrons since the ions have too much viscous drag. It is believed that the electrons are pi electrons associated with conjugated bonds, such as those present in Alzheimer's beta amyloids, since valence electrons appear to have resonant frequencies that are much higher than the GHz frequencies that the TEMT uses. The resonant interactions have disruptive effects on the molecular complexes rather than thermal activation of heat shock proteins at these parameters.

[Para 239] The interaction of the GHz electric fields with the biomolecules in the brain will be described by a simple Drude model applied to a finite conductor, and a distribution of parameters in order to obtain the Cole-Cole plot characteristic of tissue.

[Para 240] The Drude model of the interacting charge is obtained by writing Newton's second law F=MA for a particle of mass m and charge e subjected to a perturbing electric field E. Denoting the velocity of the particle by v, and assuming a frictional drag force on the particle of the form - mνv, where ν is the

$$m dv(t)/dt = - m\nu v(t) + eE(t) \quad [34]$$

[Para 241] In the TEMT treatment, an oscillating electric field is applied. Accordingly, assume that the electric field has the time dependence

$$E(t) = E \exp[i\omega t] \quad [35]$$

[Para 242] In that case,

$$v(t) = v \exp[i\omega t] \quad [36]$$

and the equation for v is simply

$$v = \{e/m(i\omega+\nu)\}E \quad [37]$$

[Para 243] If there is a number density N of these charges present, then the current density j is given by

$$j = Nev \quad [38]$$

i.e.

$$j = \{Ne^2/m(i\omega+\nu)\}E \quad [39]$$

[Para 244] In terms of the angular plasma frequency

$$\omega_p^2 = 4\pi Ne^2/m \quad [40]$$

this can be written

$$j = (1/4\pi)\{\omega_p^2/(i\omega+\nu)\}E \quad [41]$$

[Para 245] From the foregoing, we can see that the current in a conductor resulting from an electric field is larger than the number of conducting charges present (as indicated by the square of the plasma frequency ω_p^2), and is smaller the larger the collision frequency ν.

[Para 246] To determine the net field and the conductor, suppose the conductor described by eq. [41] is subjected to an externally applied electric displacement field in the z-direction:

$$D_{app} = D_{app}\, i_z = \varepsilon_{ext}\, E_{app}\, i_z \qquad [42]$$

and that the conductor has an extent w in the z-direction about z=0 and a large area A in the xy plane. Here E_{app} is the applied electric field at the large area A and ε_{ext} is the dielectric constant external to the conductor.

[Para 247] The current density will cause a surface charge density

$$\Sigma = j/i\omega \qquad [43]$$

to deposit on the surface at $z = w/2$, with an equal surface charge density of the opposite sign to deposit on the surface at $z = -w/2$, where the magnitude of the electric field in eq. [41] is given by

$$E = D_{app} - 4\pi\Sigma \qquad [44]$$

since it is the "net" field resulting from the applied field minus the "back" field due to the induced surface charge density. (Here we assume no contribution to the surface charge density from any external currents besides those described by the displacement D_{app} .)

$$E = [(-\omega^2 + i\omega\nu)/\{-\omega^2 + \omega_p^2 + i\omega\nu\}]\, D_{app} \qquad [45]$$

[Para 248] The interesting feature about eq. [45] is that it has a resonance denominator $\{-\omega^2 + \omega_p^2 + i\omega\nu\}$.

[Para 249] We note that this result could also have been obtained by requiring continuity of the displacement vector D_{app} perpendicular to the area A, using as

the internal dielectric $\varepsilon = 1 - \omega_p^2/(\omega^2 - i\omega\nu)$, the expression for a collisional plasma.

[Para 250] Thus, for a conductor, if $\omega_p^2 >> i\omega\nu$ and $\omega^2 \approx \omega_p^2$, then the magnitude of the resonance denominator can be very small and the magnitude of the net electric field E acting on the conducting charges can be very large.

[Para 251] At resonance, the numerator in eq. [45] is approximately ω_p^2 and the denominator has the approximate value of $\omega_p\nu$.

[Para 252] Thus, for a conductor, if $\omega_p^2 >> i\omega\nu$ and $\omega^2 \approx \omega_p^2$, then at this resonance the net electric field E acting on the conducting charges is larger than the applied field E_{app} by a factor $\varepsilon_{ext}\, \omega_p^2 / \omega_p\nu = \varepsilon_{ext}\, \omega_p/\nu$, i.e. the amplification is

$$\text{Amplification} = \varepsilon_{ext}\, \omega_p/\nu \qquad [46]$$

[Para 253] When this ratio is large, the resulting field can be quite disruptive.

[Para 254] To modify the Drude models to describe an insulator rather than a conductor, it is only necessary to add a single term to the Drude treatment of eq. [34]. Thus, eq. [34] describes a charge that is free to move anywhere under the influence of an electric field, subject only to a drag due to collisions. In an insulator, the charges are not free to move anywhere, but are constrained. Accordingly, if we denote the charge displacement at a position r by $\xi(r)$, then eq. [1] will describe an insulator if a term $-K\xi(r)$ is added to the right hand side to describe the restraining force:

$$m dv(t)/dt = - m\nu v(t) + eE(t) - K\xi(r) \qquad [47]$$

[Para 255] For a disturbance of the form $E(t) = E \exp[i\omega t]$, eq. [8] for the current density would become

$$j = (1/4\pi)\{i\omega\omega_p^2/(-\omega^2 + \omega_o^2 + i\omega\nu)\}E \qquad [48]$$

where $\omega_o^2 = K/m$, since $\xi = (1/i\omega)v$.

And eq. [12] relating the net field to the applied field becomes

$$E = [(-\omega^2 + \omega_o^2 + i\omega\nu)/\{-\omega^2 + \omega_o^2 + \omega_p^2 + i\omega\nu\}]\ \varepsilon_{ext}\ E_{app} \qquad [49]$$

[Para 256] Thus, for an insulator, if $\omega_p^2 + \omega_o^2 >> i\omega\nu$ and $\omega^2 \approx \omega_p^2 + \omega_o^2$, then the magnitude of the resonance denominator can be very small and the magnitude of the net electric field E acting on the constrained charges can be very large. The amplification of the applied field at resonance is approximately

$$\text{Amplification} = \varepsilon_{ext}\ [\omega_p^2 + \omega_o^2]^{1/2}/\nu \qquad [50]$$

[Para 257] When the charge is moving in a viscous medium, it is sometimes revealing to express the collision frequency in terms of the viscosity η of the medium.

[Para 258] This can be done through the Stokes law relation that gives the viscous force F_{visc} acting on a spherical object of radius a moving at a velocity v through the medium:

$$F_{visc} = 6\pi\eta a v \qquad [51]$$

[Para 259] On comparing this with the drag force $m\nu v$ in eq. [34], we see that in a viscous medium,

$$\nu = 6\pi\eta a/m \qquad [52]$$

[Para 260] Thus, in a viscous medium, the collision frequency is proportional to the viscosity, and since the mass of the charge is proportional to the cube of

the radius of the mass, the collision frequency is inversely proportional to the square of the mass's radius.

[Para 261] In the RF range of frequencies, the complex dielectric "constant" ε of biological tissues approximately satisfies a Cole-Cole distribution:

$$\varepsilon(\omega) = \varepsilon_\infty + \{\varepsilon_o - \varepsilon_\infty\}/\{1 + (i\omega\tau)^{(1-\alpha)}\} \quad [53]$$

[Para 262] This equation can be separated into its real ε' and imaginary ε'' parts as follows:

$$\varepsilon' = \varepsilon_\infty + (1/2)\{\varepsilon_o - \varepsilon_\infty\}[1 - \sinh((1-\alpha)x)/\{\cosh((1-\alpha)x) + \cos\{\alpha\pi/2)\}] \quad [54]$$

$$\varepsilon'' = (1/2)\{\varepsilon_o - \varepsilon_\infty\}[\cos\{\alpha\pi/2)/\{\cosh((1-\alpha)x) + \sin\{\alpha\pi/2)\}] \quad [55]$$

where

$$x = \ln(\omega\tau) \quad [56]$$

[Para 263] Moreover, the conductivity can be written in terms of the imaginary part of the dielectric constant:

$$\sigma = i\omega\varepsilon'' \quad [57]$$

[Para 264] This type of distribution can be obtained from the above Drude expressions by allowing a distribution of parameters in those expressions. Thus, the distribution of parameters in the Drude expressions means that in biological tissues it is possible to observe the desired resonances at several frequencies rather than at just one frequency.

[Para 265] It was established above that the electric field applied by a TEMT coil is very small compared to naturally occurring cellular fields, on the order of 55 V/m. It was concluded that in order to have an appreciable effect, some

resonance phenomena must have been involved in the brain cells in which the applied field was amplified at resonance.

[Para 266] The development of a simple framework using the Drude model helps to identify which type of cellular components might be involved, and has led to the following conclusions:

[Para 267] If conducting (mobile) charges are involved, then the applied field can be amplified by a factor

$$\text{Amplification} = \varepsilon_{ext}\, \omega_p/\nu$$

[Para 268] At the resonance $\omega^2 \approx \omega_p^2$ when $\omega_p^2 >> i\omega\nu$. Here, ω is the (angular) frequency of the TEMT field, ω_p is the plasma frequency defined by eq. [40], ν is the collision frequency of the charges, and ε_{ext} is the dielectrtic constant of the region surrounding the conductor

[Para 269] A similar amplification can occur for insulating (constrained) charges, and is given in eq. [50]

[Para 270] In biological tissues, there is a distribution in the Drude parameters, so that resonances can occur over a relatively broad range of frequencies rather than at just a single frequency.

[Para 271] The collision frequency ν can be related to viscosity η [Cf. eq. 52] when the charge moves through a viscous medium (such as the cell electrolyte).

[Para 272] The last observation leads us to suggest that the important charges involved in TEMT are electrons within cellular biomolecules, rather than the ions in either the intra- or extra-cellular electrolyte. Thus, a typical ion in the electrolyte is Na^+. It has a hydrated radius of close to 1 Angstrom. The

molecular weight of Na is 23 and the hydrated ion has 6 water molecules in its innermost hydration shell. So we can assign a molecular to the hydrated ion of approximately (23+6x18) =131. The corresponding mass is approximately 1.3 x 10^{-22} gm. With a viscosity of water of about 0.01 poise, eq. [52] then gives for a typical ion collision frequency in the electrolyte:

$$\nu = 6\pi\eta a/m = 6\pi x10^{-2}10^{-8}/1.3x10^{-22} \approx 1.4 \text{ x } 10^{13} \text{ sec}^{-1}$$

[Para 273] This typical ion collision frequency is four orders of magnitude larger than the 1 GHz (resonant) frequencies of TEMT, and suggests that ions cannot be the charges involved in any resonant amplification of the applied fields. It is believed that the biomolecular electrons involved are those that are conducting - most likely pi electrons from conjugated bonds. The reason is that the bound electrons (valence) electrons have resonant frequencies that are much higher than the GHz type frequencies that are effective in TEMT. Thus, TEMT is effective in treating Alzheimer's because its applied GHz fields are interacting resonantly with internal biomolecular electrons.

[Para 274] The aforementioned calculations assumed a simple wide block geometry of the treated biomolecular complexes. However, the resonant amplification of the pulsed energy fields, such as the radiofrequency and microwave fields, is not limited to block-like geometries, although the resonant frequencies can depend on the shape of the complexes. The biomolecule complexes surrounding and in the brain tissue have different geometric shapes, pi electrons are present not just in beta amyloid complexes, but also in the

ubiquitous microtubules. Thus, the following takes in to account the different shapes of the conduction pi electron complexes using the Drude model.

[Para 275] The electrons that occupy these geometrical shapes will be characterized by a simple frequency-dependent dielectric constant $\varepsilon(\omega)$. This dielectric constant was derived with a simple Drude model, as indicated above which leads to the expression for the frequency-dependent dielectric constant:

$$\varepsilon(\omega) = 1 - \omega_p^2 \{\omega^2 - \omega_o^2 - i\omega\nu\}^{-1} \quad [58]$$

[Para 276] Here ω is the (angular) frequency and ν is the electron collision frequency.

[Para 277] The quantity

$$\omega_p^2 = 4\pi\, Ne^2/m \quad [59]$$

is the square of the (angular) plasma frequency, where N is the electron number density, e is the electron charge, and m is the electron mass.

[Para 278] The quantity

$$\omega_o^2 = K/m \quad [60]$$

is the square of the (angular) restoration frequency, where K is a restoring force constant;

and ν is the collisional frequency of the electrons. For an insulator, ω_o^2 is non-zero. For a conductor, $\omega_o^2 = 0$.

[Para 279] When the Drude calculation model is applied to arbitrary geometries, such as a long cylinder, a disk, an ellipsoid, an infinitely thin prolate ellipsoid (thin needle), an infinitely thin oblate ellipsoid (thin disk), the result is that both the resonant frequencies and the field amplifications change.

The complexes have been shown to experience amplified internal electric fields at particular frequencies.

[Para 280] For convenience, the resonant frequencies are summarized in Table 4 for each of the five shapes, and the approximate amplification (ratio of the internal field to the applied field) factors at these resonant frequencies are summarized in Table 5. In both Tables 4 and 5, it has been assumed that:

[Para 281] The complexes are good electron conductors, i.e. the restoration frequency ω_o characterizing binding forces is assumed to be close to zero and is ignored ($\omega_o \to 0$);

[Para 282] The electron collision frequency ν is assumed to be much less than the (angular) frequency ω of the applied field ($\nu \ll \omega$);

[Para 283] The dielectric constant ε_{ext} of the external medium is assumed to be large ($\varepsilon_{ext} \gg 1$) as will be the case for intra- and extra-cellular electrolytes where $\varepsilon_{ext} \approx 80$.

[Para 284] **Table 4.** Approximate (angular) resonant frequencies for frequency-dependent dielectric of eq. [58] with approximations enumerated above.

Long thin cylinder (radius a<<length L), E_{app} along axis	$\omega^2 \approx \omega_p^2(a/L)(2\pi^2/\varepsilon_{ext})$
Thin plate (thickness 2a<<width w and length L), E_{app} along plate along L	$\omega^2 \approx \omega_p^2 (4/\pi)(a/L)\ln(L/2a)(1/\varepsilon_{ext})$
Collection of spheres	$\omega^2 \approx \omega_p^2/(2\varepsilon_{ext})$

Collection of randomly oriented thin prolate ellipsoids (needles)	$\omega^2 \approx \omega_p^2/\varepsilon_{ext}$
Collection of randomly oriented thin oblate ellipsoids (discs)	$\omega^2 \approx \omega_p^2$

[Para 285] **Table 5.** Approximate amplification (E_{int}/E_{app}) at the resonant frequencies of Table 4, for frequency-dependent dielectric of eq. [58] with approximations enumerated above before Table 4.

Long thin cylinder (radius a<<length L), E_{app} along axis	$\lvert E_{int}/E_{app}\rvert \approx (\omega_p/\nu)(2\pi^2 a/\varepsilon_{ext}L)^{1/2}$
Thin plate (thickness 2a<<width w and length L), E_{app} along plate along L	$\lvert E_{int}/E_{app}\rvert \approx (\omega_p/\nu)[(4a/\pi\varepsilon_{ext}L)\ln(L/2a)]^{1/2}$
Collection of spheres	$\lvert E_{int}/E_{app}\rvert \approx (3\sqrt{2}/4)(\omega_p/\nu)(1/\varepsilon_{ext}^{1/2})$
Collection of randomly oriented thin prolate ellipsoids (needles)	$\lvert E_{int}/E_{app}\rvert \approx (4/3)(\omega_p/\nu)(1/\varepsilon_{ext}^{1/2})$
Collection of randomly oriented thin oblate ellipsoids (discs)	$\lvert E_{int}/E_{app}\rvert \approx (\omega_p/\nu)\varepsilon_{ext}$

[Para 286] Tables 4 and 5 show that biomolecular complexes of different shapes can amplify externally applied electric fields at particular resonant frequencies. Both the resonant frequencies and the amplifications at the resonant frequencies depend on shapes of the complexes. For the first four out of the five biomolecular shapes, the frequencies at which resonance (and field amplification) occur are reduced from what would be expected for bulk electron conductors. Only in the fifth case of randomly oriented thin oblate ellipsoids

(discs) does the resonance occur at the plasma frequency of the internal conducting electrons. In the other four cases, the dielectric of the external medium decreases the resonance by a factor ($1/\varepsilon_{ext}^{1/2}$). In addition, for the thin conducting cylinder and thin conducting disc, additional reductions in the resonant frequency occur that depend on the ratio of the thickness of the conductors to their large dimensions.

[Para 287] Tables 4 and 5 also show that when the shapes of the complexes cause the resonant frequencies to decrease from the plasma frequency (at which resonance occurs for bulk dielectrics), the magnitude of the field amplification also decreases. For the first four cases, the decrease in amplification is proportional to $1/\varepsilon_{ext}^{1/2}$. In addition, for the first two cases of a thin cylinder and thin plate, a reduction depending on the ratio of the thickness to the large dimensions also enters. The largest amplification occurs for the case of randomly oriented thin oblate ellipsoids (discs): there the amplification is directly proportional to the large ε_{ext}. Large amplification is all cases also depends on the conduction electron collision frequency ν being small.

[Para 288] It has been shown above that the low magnitudes of the pulsed electromagnetic energy fields and the large viscous damping of the ions in the brain cells point to interactions of the electromagnetic fields with intramolecular electrons. It is also shown above that in a simple wide block geometry, conducting electrons could amplify the low intensity fields at certain resonant frequencies. The broad distribution of parameters in tissues is evidenced by the Cole-Cole distribution of dielectric properties that enable

these resonances to occur over a wide range of frequencies. It was also shown above that these results also apply to biomolecular clusters of different shapes and the resonant amplification of the electromagnetic fields is not limited to block-like geometries but that the resonant frequency tuning could be obtained by varying the shape of the complexes. Given the foregoing, it is believed that the successful treatment of Alzheimer's disease and other neurodegenerative diseases in accordance with the invention is due to interaction with pi-conjugated systems, such as the typical pi-conjugated biomolecules expected to exist in the brain.

[Para 289] Recent research has indicated that vibration modes of proteins are in the THz range of frequencies rather than the much lower 3 MHz - 300 GHz range of radiofrequencies of interest. Cytoskeletal filamentary structures could have lower vibration frequencies, but the viscous damping of these modes would be very large. To counter the damping, energy could be supplied by ATP or GTP hydrolysis.

[Para 290] The state of conducting polymers has been researched recently and remarkable progress has been made in organic conductors. It has been found that conductivities range from those of insulators (10^{-16} S/cm) through those of semiconductors 10^{-7}. 10^{2} S/cm) to those of good conductors (10^{4} S/cm -10^{8} S/cm). The conductivities depend strongly on the doping of the doping of the polymer: e.g. polymers in a NaCl electrolyte can have a very respectable 10 S/cm conductivity). Band gap theory is not adequate to understand the conductivity mechanism, since doping plays such an important role: the results

in a variety of charge carriers, such as polarons, bipolarons, and solitons. The mobility of these charge carriers is not determined by the usual viscosity mechanism, but can be much less, depending on dopant, temperature, and inherent structure.

[Para 291] Amyloid fibril formation is a common characteristic of a variety of unrelated diseases, including Alzheimer's disease, diabetes mellitus, prion diseases, and familial amyloidosis. It is believed that pi-stacking may play an important role in amyloid fibril formation. The attractive non-bonded conjugated pi electron systems tend to hold the fibrils together in different, typically four, configurations. Three aromatic residues are the most frequent ones present, namely, tryptophan, tyrosine, and phenylalanine.

[Para 292] The presence of conjugated pi-electron systems in the amyloid fibrils and the demonstrated amplified radiofrequency interactions of similar systems doped by immersion in electrolytes suggests that the successful treatment of Alzheimer's disease with radiofrequency electromagnetic radiation may involve radiofrequency, or other pulsed electromagnetic field, interaction with these pi-electron systems. Disruption of the systems could very well result in destruction of the amyloid fibrils. Binding of conducting chains has been shown to differ drastically in magnitude from two chains in which the conduction is prevented. Moreover, the interaction between conducting systems in which the conductivity is anisotropic, as in pi-electron systems, has been shown to be strongly dependent on the density of participating electrons.

[Para 293] Thus, the successful treatment of Alzheimer's disease, and other neurodegenerative diseases, with low power electromagnetic fields, such as in the radiofrequency range of frequencies, is believed to involve resonant interaction with conjugated pi electron systems in the biomolecules surrounding or within the brain tissue, such as in the beta amyloid protein present in brains of Alzheimer's patients. Other targets include tau proteins, particularly tangled tau proteins, which are present in the brain cells of Alzheimer's patients. Other areas which could be targeted include a leaky blood-brain barrier, inflamed portions of the brain, and junk proteins of the brain.

[Para 294] It is believed that in particular the leaky blood-brain barrier, which has been found to be compromised in patients with Alzheimer's to allow neurotoxic plasma-derived components to enter the brain, could be treated with the non-resonant thermally activated heat shock proteins. It has also been found that there is a correlation between brain inflammation and the junk proteins present in inflamed areas in Alzheimer's disease, along with other forms of dementia. As activated heat shock proteins repair or destroy malformed proteins, inflamed portions of the brain are a natural target for heat shock protein treatment which are thermally activated by electromagnetic fields, in accordance with the present invention. The low power resonant treatment of Alzheimer's and other neurodegenerative diseases, could be for molecular and tissue targets in which the electromagnetic fields which are applied interact resonantly with the pi electron stacks in these target

biomolecular complexes and tissues, including beta amyloids, which are a characteristic of Alzheimer's brains. This interaction disrupts the structural integrity of the beta amyloid, or other molecular complexes. The resonant frequency for the interaction is shown to depend on several factors, including the number density of electrons, whether the electrons are conducting or insulating, the shape of the region containing the electrons, and the surrounding dielectric. The width of the resonant frequency is shown to depend strongly on the collision frequency of the electrons. The usable electromagnetic fields have been found to be in the frequency range of both radiofrequencies and microwaves as mentioned above.

[Para 295] Although several embodiments have been described in detail for purposes of illustration, various modifications may be made without departing from the scope and spirit of the invention. Accordingly, the invention is not to be limited, except as by the appended claims.

What is claimed is:

[Claim 1] A method for preventing or treating neurodegenerative diseases, including Alzheimer's disease, comprising the steps of:

determining that an individual has a neurodegenerative disease or is at risk of developing a neurodegenerative disease;

providing a pulsed electromagnetic energy, comprising radiofrequency or microwave, having selected energy parameters including wavelength or frequency, duty cycle and pulse train duration, wherein the pulsed energy parameters are selected so as to raise a temperature of treated tissue sufficiently to stimulate heat shock protein activation in the treated tissue or fluid; and

applying the pulsed energy to a brain of the individual so as to prevent or treat the neurodegenerative disease.

[Claim 2] The method of claim 1, wherein the pulsed electromagnetic energy is directed to one or more of a leaky blood-brain barrier, inflamed portions of the brain, junk proteins of the brain, beta amyloid proteins of the brain, or tangled tau proteins of the brain.

[Claim 3] The method of either of claims 1 or 2, wherein the pulsed energy comprises a radio frequency between three to six megahertz, a duty cycle between 2.5% and 5.0% and a pulse train duration between 0.2 and 0.4 seconds.

[Claim 4] The method of claim 3, wherein the radio frequency is generated with a coil have a radii between 2 mm and 6 mm and between 13 and 57 amp turns.

[Claim 5] The method of any of claims 1-4, wherein the pulsed energy parameters are selected and applied to the brain to cause resonant interactions within biomolecules within and around brain tissue.

[Claim 6] The method of claim 5, wherein the pulsed energy creates resonant interaction with conjugated pi electron systems in the biomolecules.

[Claim 7] The method of claim 6, wherein the resonant interactions disrupt the structural integrity of beta amyloid molecules.

[Claim 8] The method of claim 5, including the step of disposing a plurality of spaced-apart electromagnetic emitters adjacent a head of the individual.

[Claim 9] The method of claim 8, wherein the electromagnetic fields of the spaced apart radio frequency emitters do not overlap.

[Claim 10] The method of claim 8, including the step of setting the power level of each emitter so that a specific absorption rate in the brain is between 1.0 W/kg and 2.0 W/kg.

[Claim 11] The method of claim 8, wherein each emitter transmits a radio frequency field at 850-950 megahertz every 4 to 5 milliseconds.

[Claim 12] The method of claim 5, wherein the pulsed energy is applied to the brain for multiple, spaced-apart treatments each day.

[Claim 13] A method for preventing or treating neurodegenerative diseases, including Alzheimer's disease, comprising the steps of:

determining that an individual has a neurodegenerative disease or is at risk of developing a neurodegenerative disease;

providing a pulsed energy, comprising radiofrequency or microwave, having selected energy parameters including wavelength or frequency, duty cycle and pulse train duration; and

applying the pulsed energy to a brain of the individual so as to prevent or treat the neurodegenerative disease;

wherein the pulsed energy is directed to one or more of a leaky blood-brain barrier, inflamed portions of the brain, junk proteins of the brain, beta amyloid proteins of the brain, or tangled tau proteins of the brain; and

wherein the pulsed energy parameters are selected so as to raise a temperature of treated tissue sufficiently to stimulate heat shock protein activation in the treated tissue or fluid.

[Claim 14] The method of claim 13, wherein the pulsed energy comprises a radio frequency between three to six megahertz, a duty cycle between 2.5% and 5.0% and a pulse train duration between 0.2 and 0.4 seconds.

[Claim 15] The method of claim 14, wherein the radio frequency is generated with a coil have a radii between 2 mm and 6 mm and between 13 and 57 amp turns.

[Claim 16] A pulsed energy system for preventing or treating neurodegenerative diseases, including Alzheimer's disease, comprising:

a pulsed electromagnetic energy source applied to a brain, comprising radiofrequency or microwave, having selected energy parameters including wavelength or frequency, duty cycle and pulse train duration, wherein the pulsed energy parameters are selected so as to raise a temperature of treated tissue sufficiently to stimulate heat shock protein activation in the treated tissue or fluid.

[Claim 17] The system of claim 16, wherein the pulsed electromagnetic energy is directed to one or more of a leaky blood-brain barrier, inflamed

portions of the brain, junk proteins of the brain, beta amyloid proteins of the brain, or tangled tau proteins of the brain.

[Claim 18] The system of either of claims 1 or 2, wherein the pulsed energy comprises a radio frequency between three to six megahertz, a duty cycle between 2.5% and 5.0% and a pulse train duration between 0.2 and 0.4 seconds.

[Claim 19] The system of claim 18, wherein the radio frequency is generated with a coil have a radii between 2 mm and 6 mm and between 13 and 57 amp turns.

[Claim 20] The system of any of claims 16-19, wherein the pulsed energy parameters are selected and applied to the brain to cause resonant interactions within biomolecules within and around brain tissue.

[Claim 21] The system of claim 20, wherein the pulsed energy creates resonant interaction with conjugated pi electron systems in the biomolecules.

[Claim 22] The system of claim 21, wherein the resonant interactions disrupt the structural integrity of beta amyloid molecules.

[Claim 23] The system of claim 20, wherein a plurality of spaced-apart electromagnetic emitters are disposed adjacent to a head of the individual.

[Claim 24] The system of claim 23, wherein the electromagnetic fields of the spaced apart radio frequency emitters do not overlap.

[Claim 25] The system of claim 23, wherein the power level of each emitter is set so that a specific absorption rate in the brain is between 1.0 W/kg and 2.0 W/kg.

[Claim 26] The system of claim 23, wherein each emitter transmits a radio frequency field at 850-950 megahertz every 4 to 5 milliseconds.

[Claim 27] The system of claim 20, wherein the pulsed energy is applied to the brain for multiple, spaced-apart treatments each day.

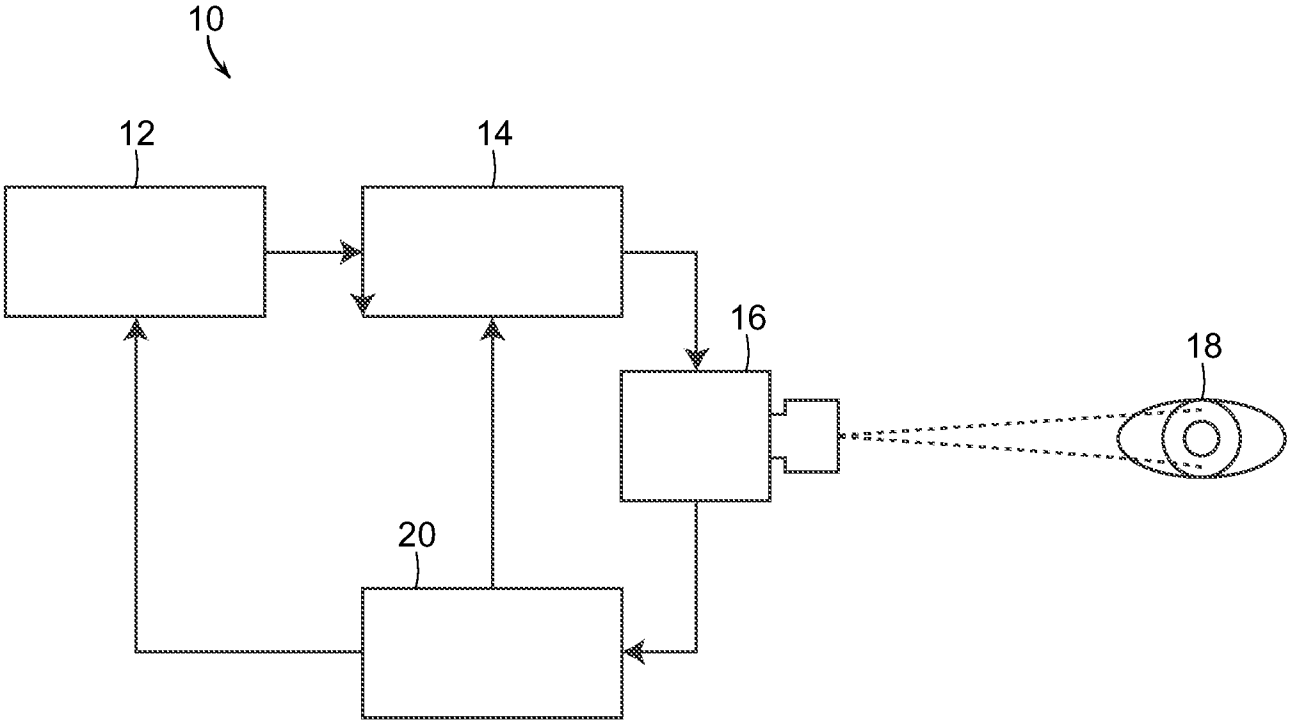

FIG. 1

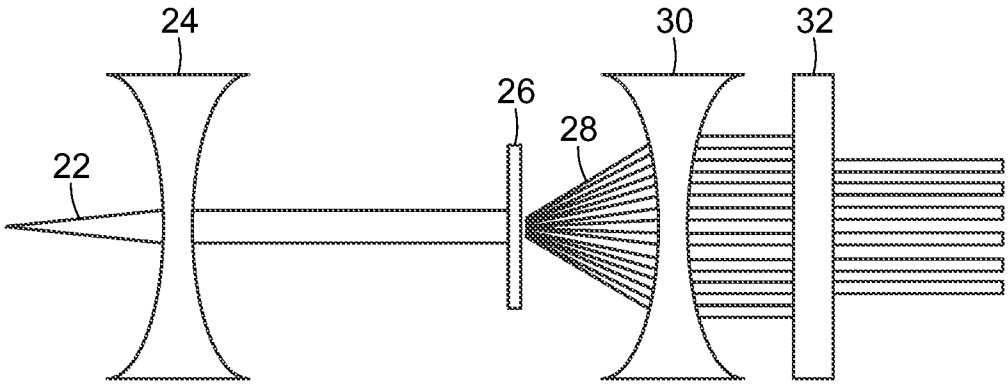

FIG. 2

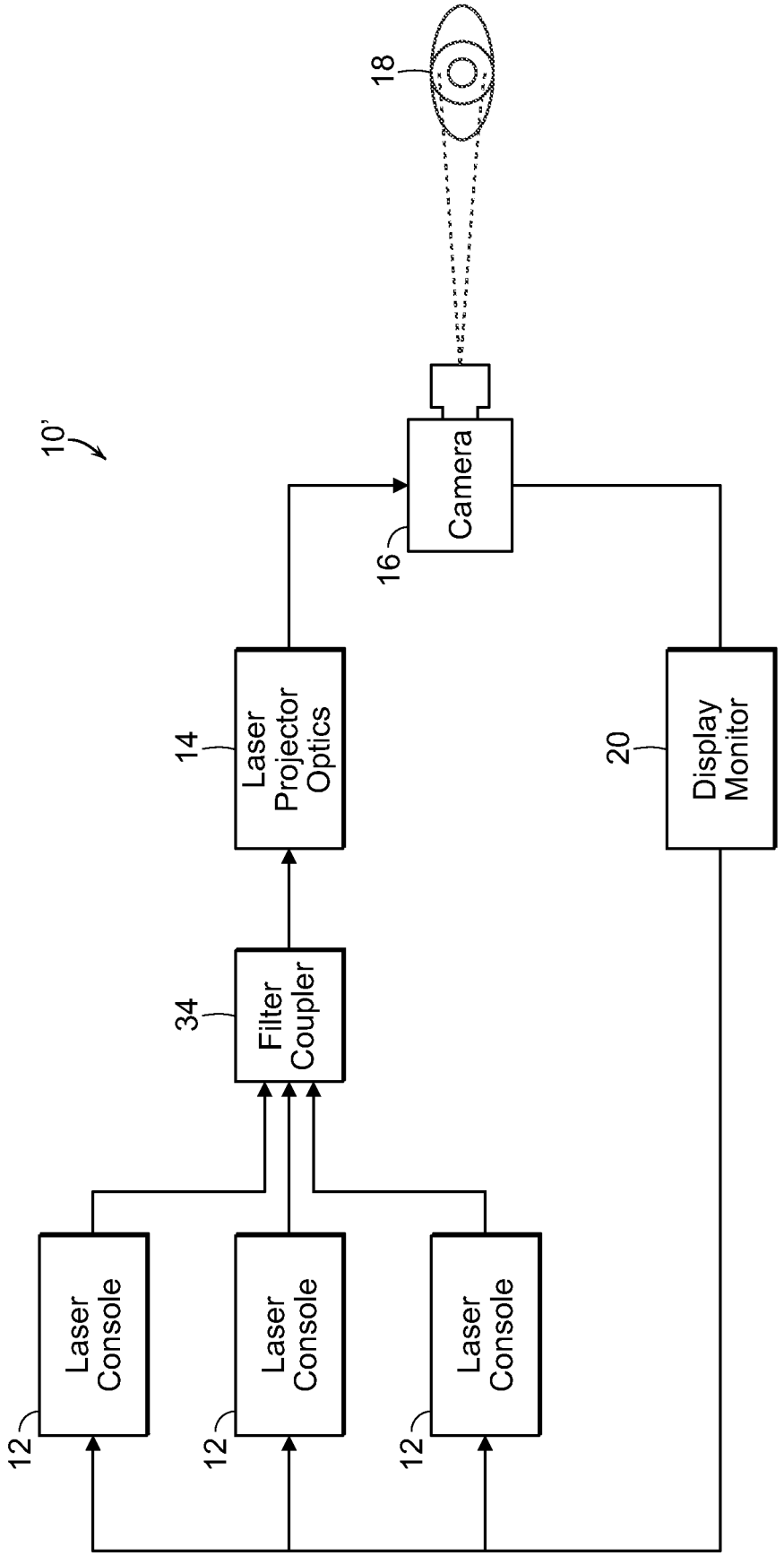
10'
12
Laser Console
12
Laser Console
12
Laser Console
34
Filter Coupler
14
Laser Projector Optics
16
Camera
18
20
Display Monitor

FIG. 3

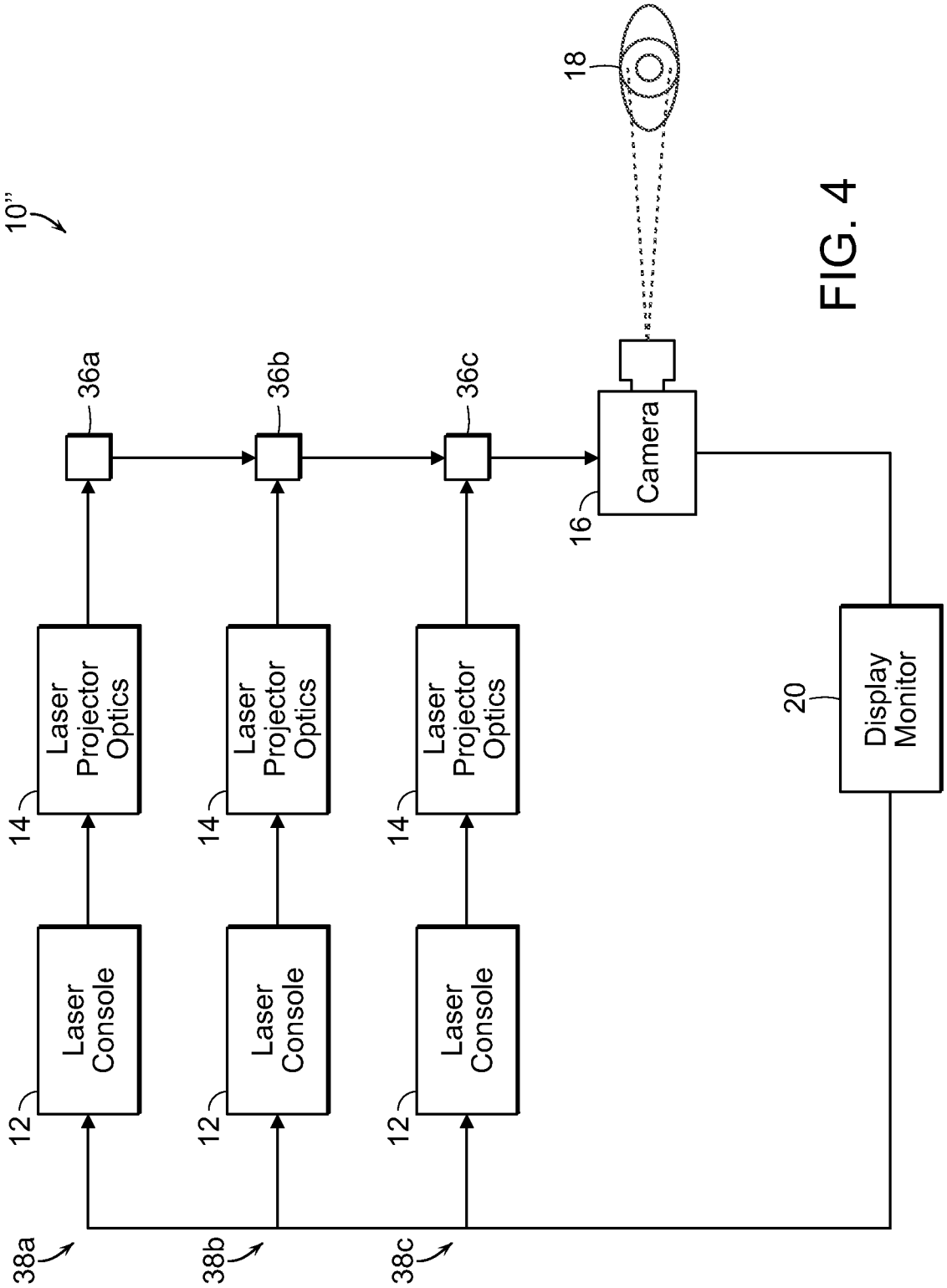
10''
18
36a
36b
36c
Camera
16
Laser Projector Optics
14
Laser Console
12
20
Display Monitor
38a
38b
38c

FIG. 4

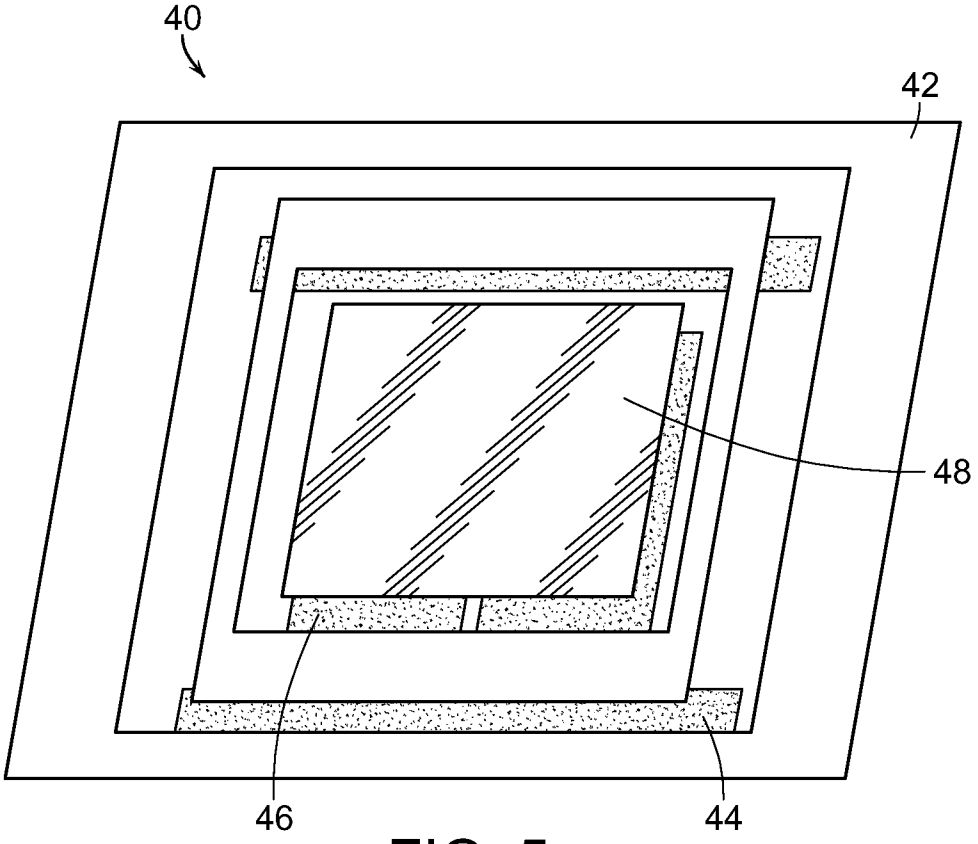

FIG. 5

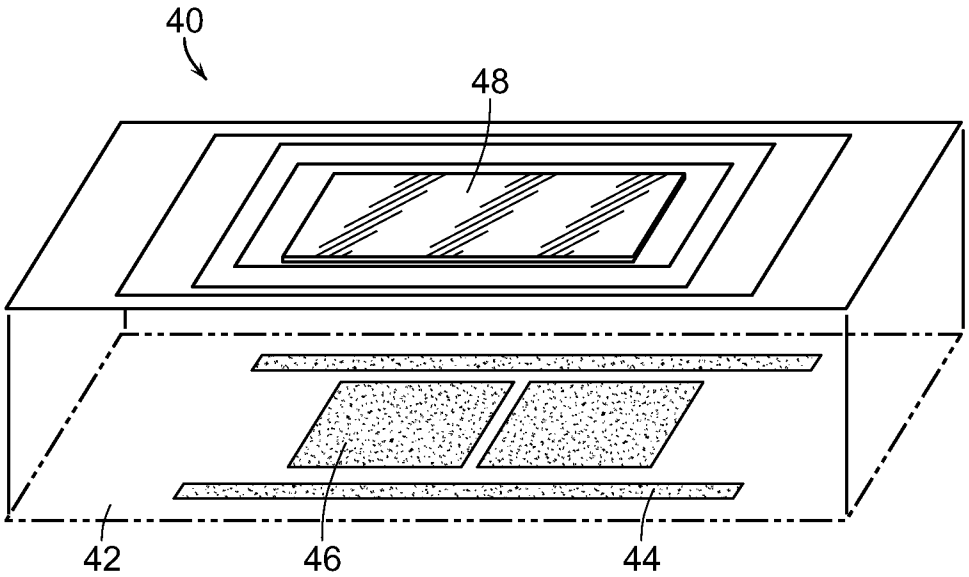

FIG. 6

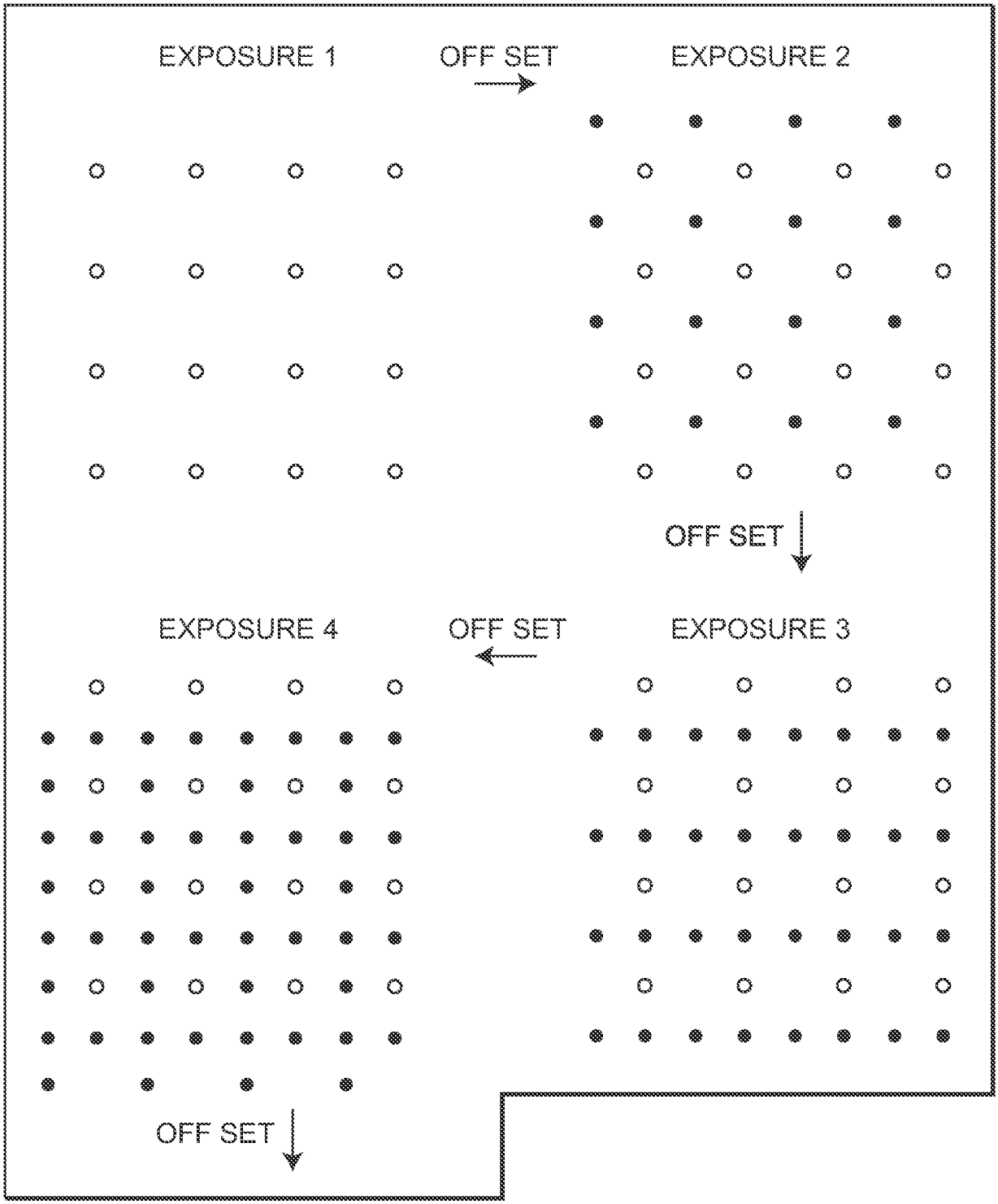
EXPOSURE 1
OFF SET
EXPOSURE 2
OFF SET
EXPOSURE 4
OFF SET
EXPOSURE 3
OFF SET

FIG. 7

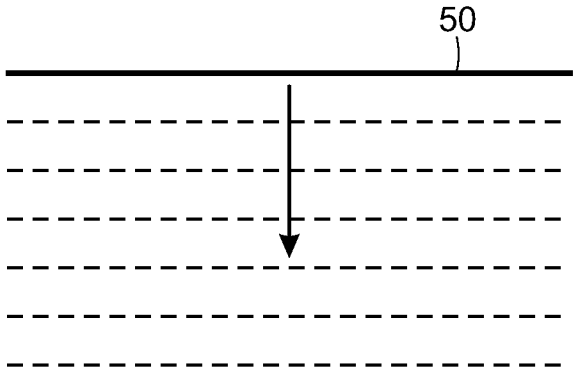

FIG. 8

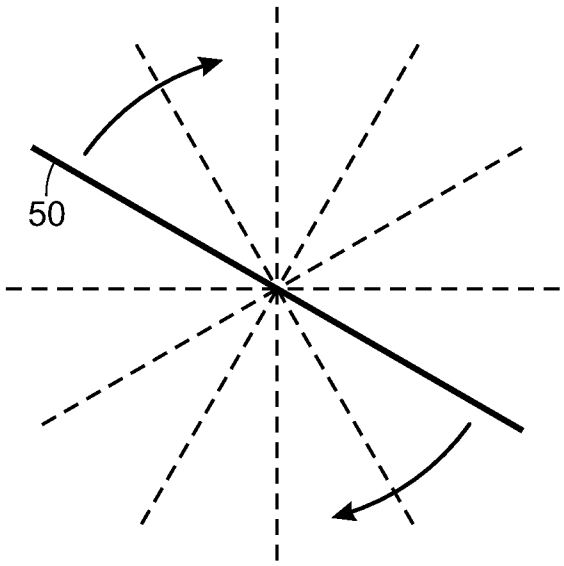

FIG. 9

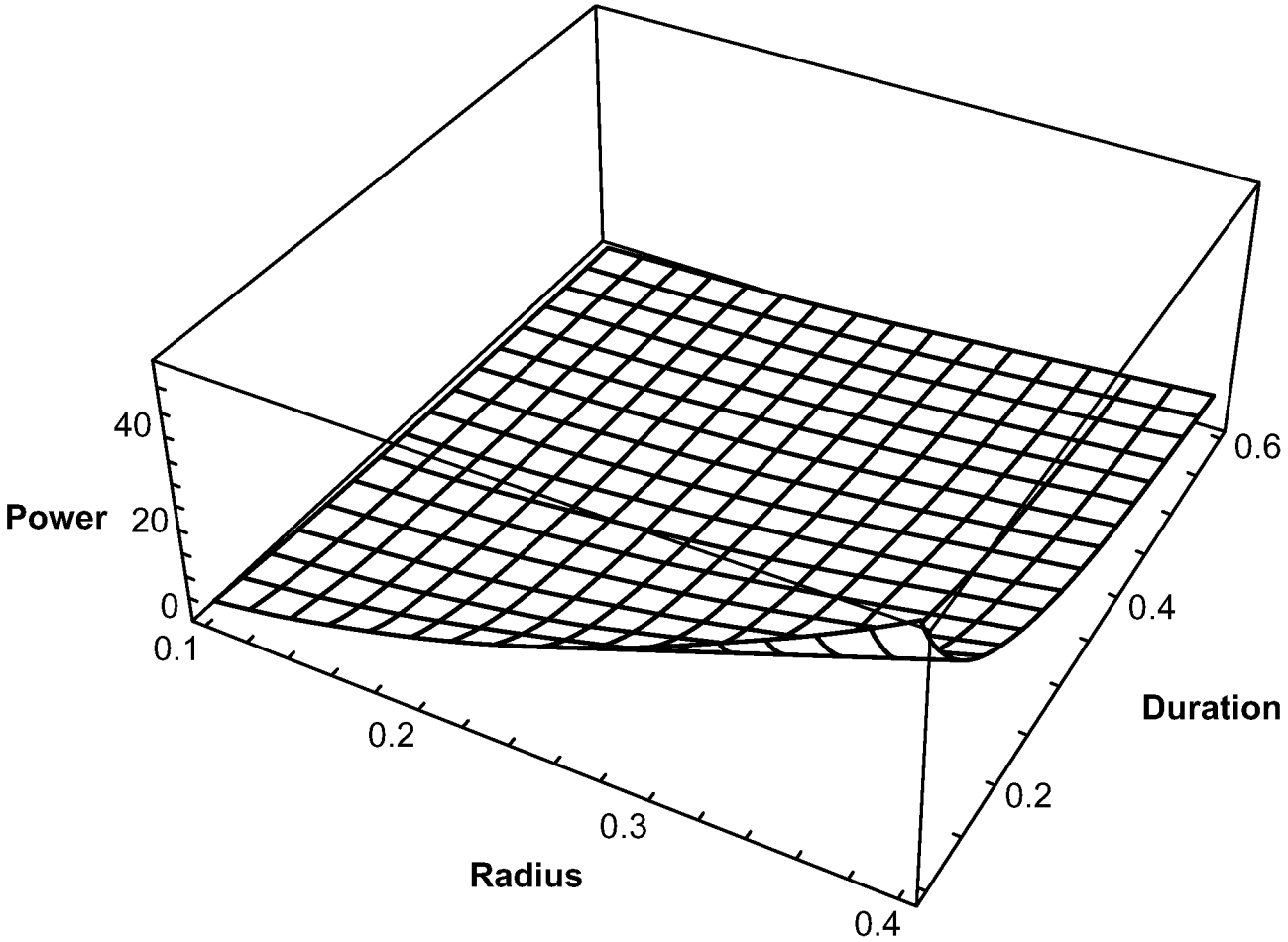

FIG. 10

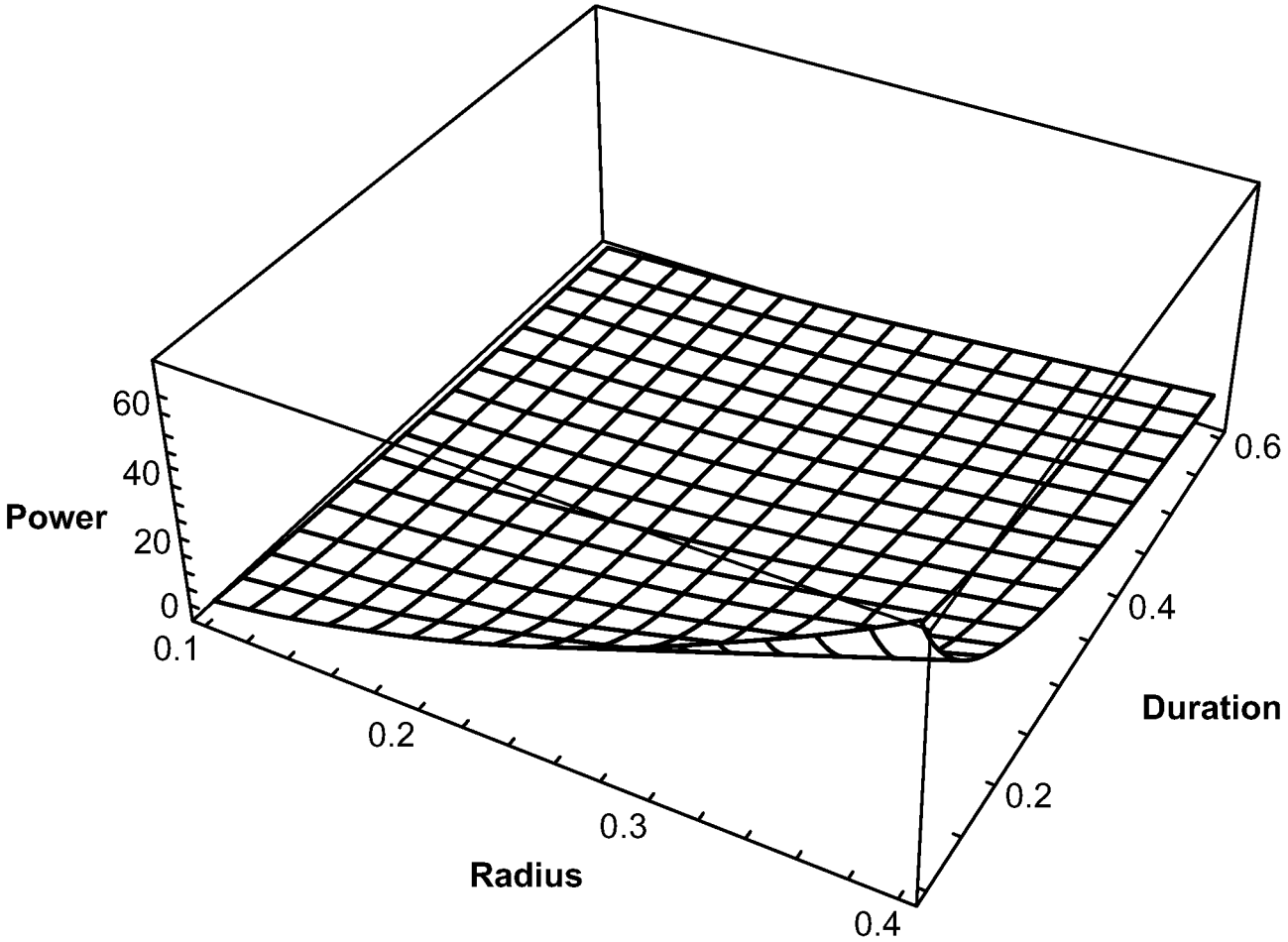

FIG. 11

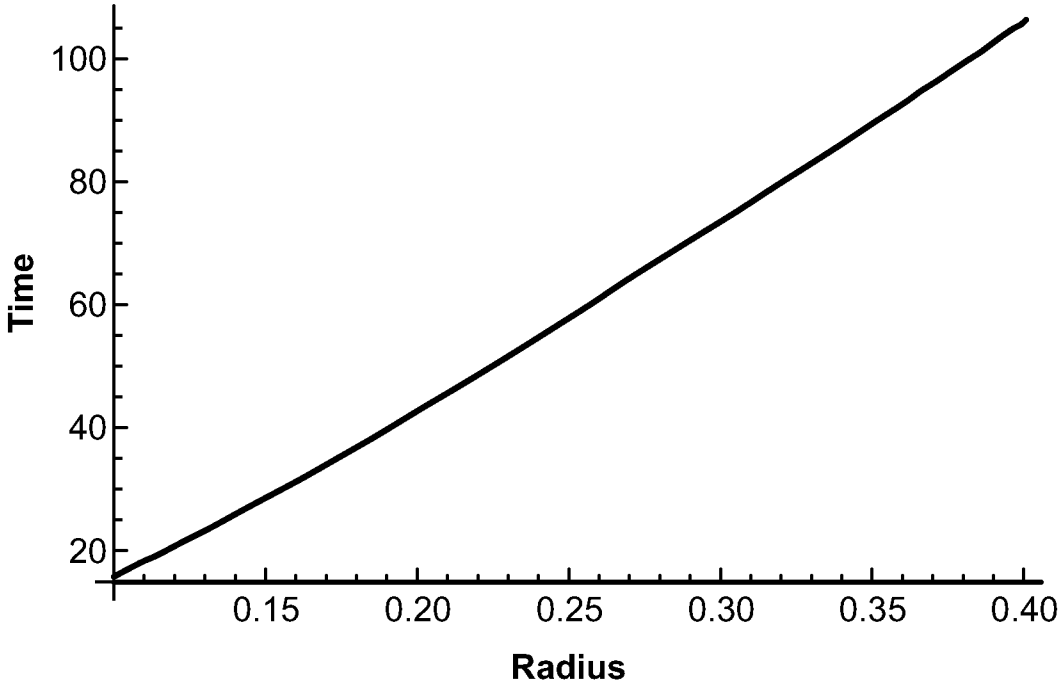
100
80
60
40
20
Time
0.15
0.20
0.25
0.30
0.35
0.40
Radius

FIG. 12

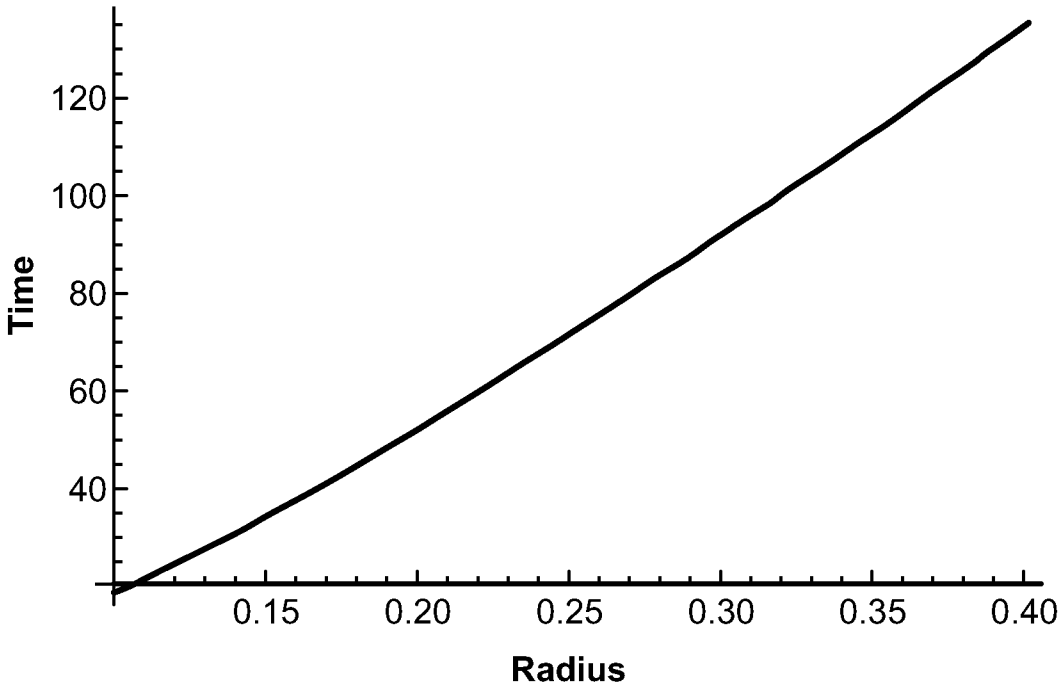
120
100
80
60
40
Time
0.15
0.20
0.25
0.30
0.35
0.40
Radius

FIG. 13

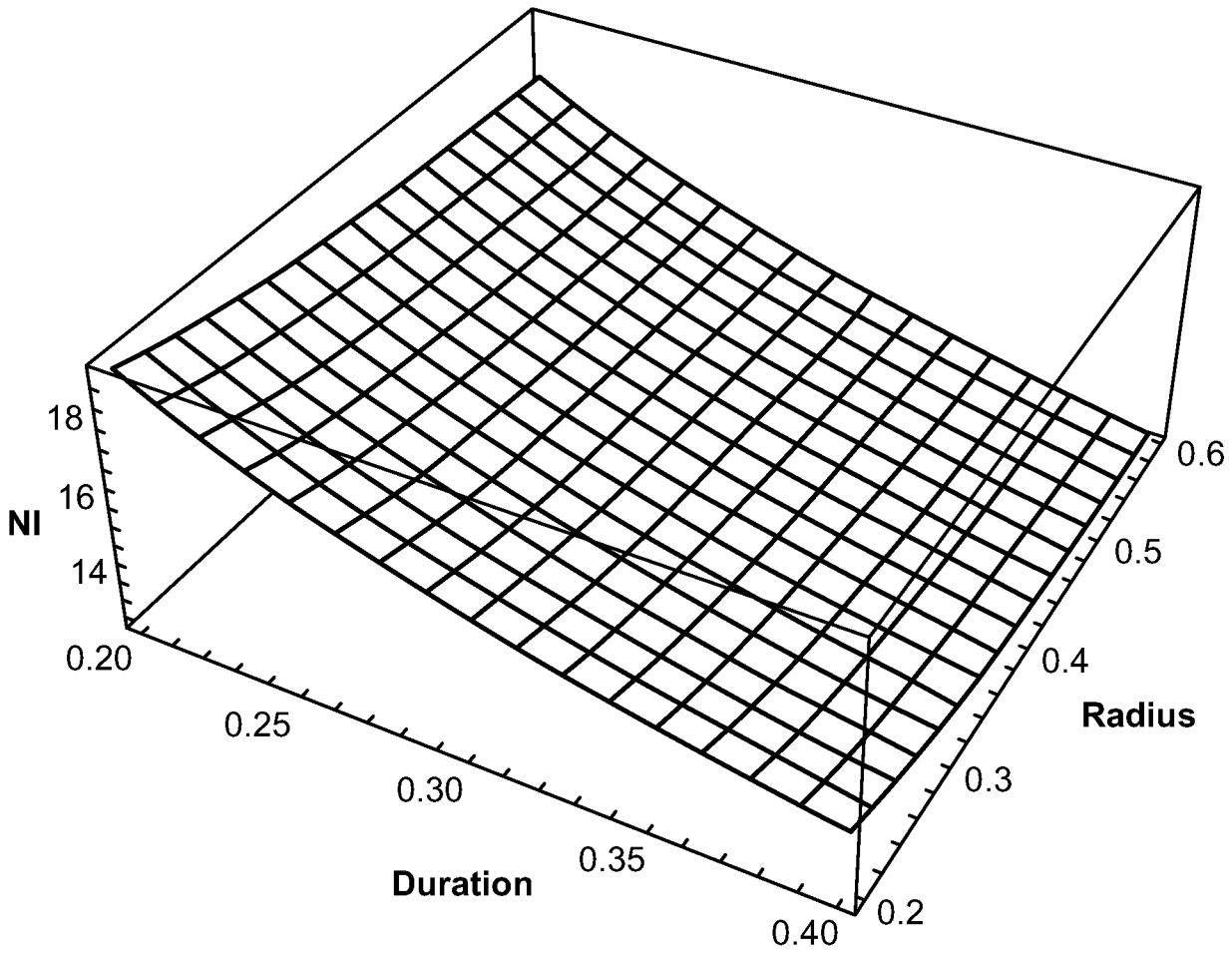

FIG. 14

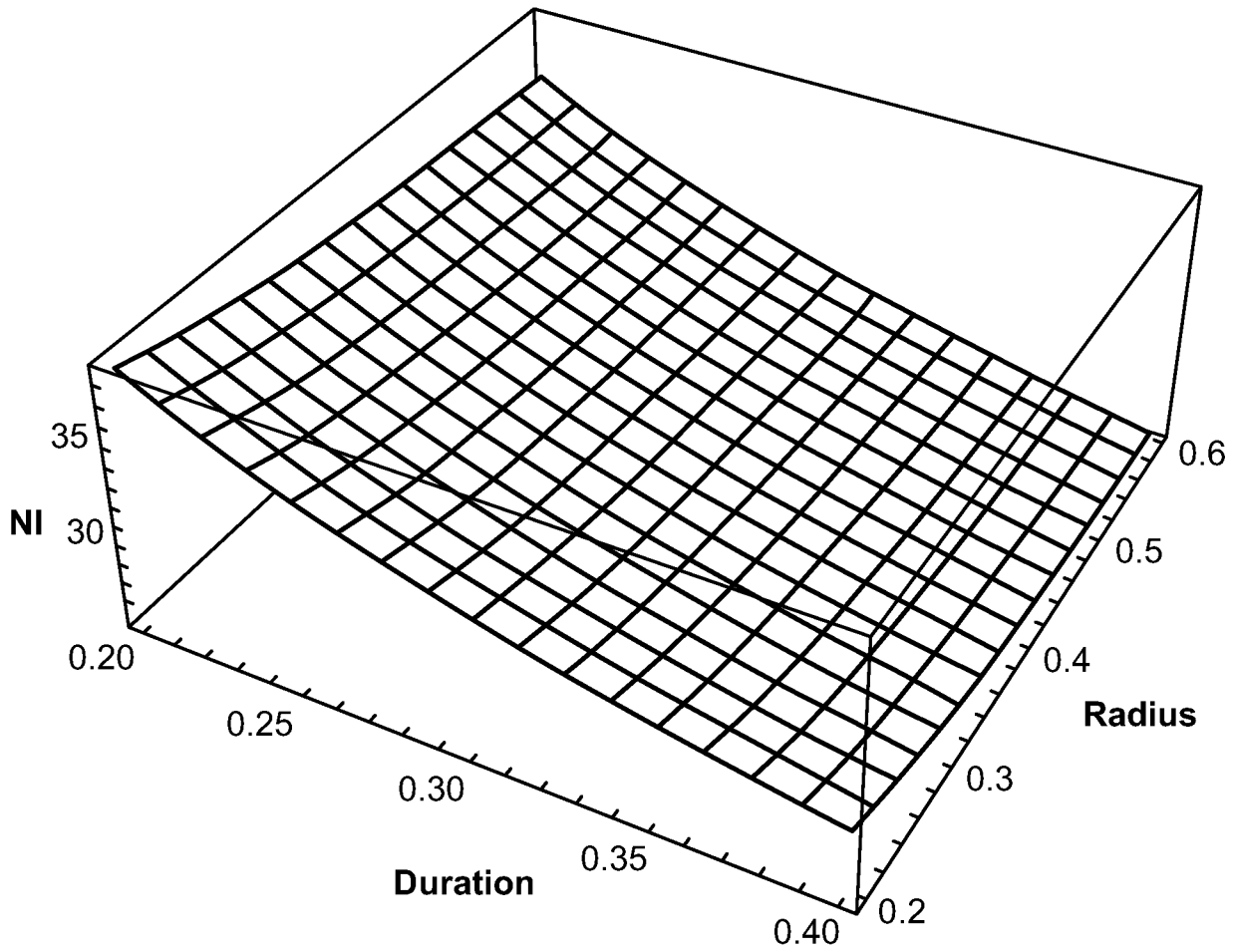

FIG. 15

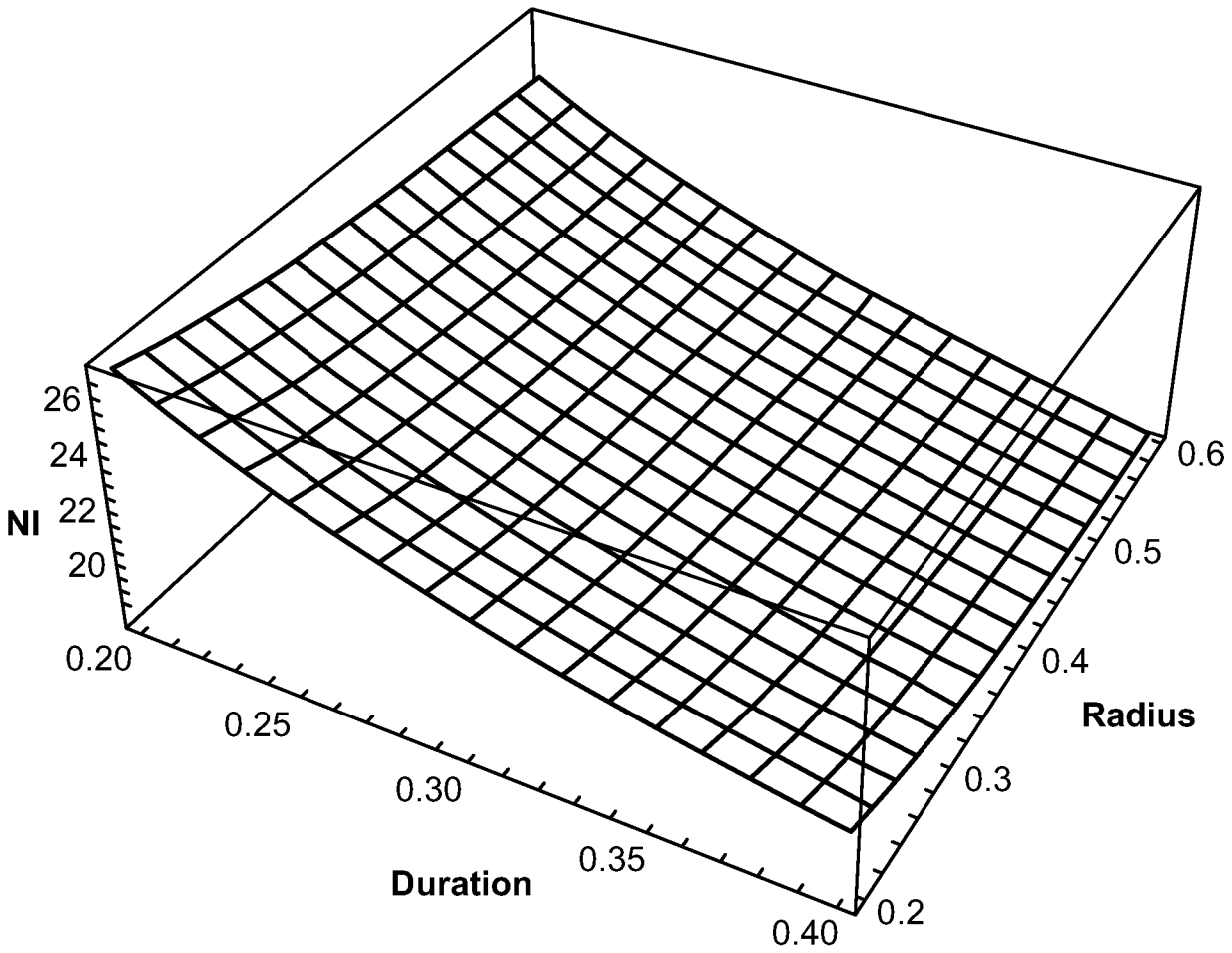

FIG. 16

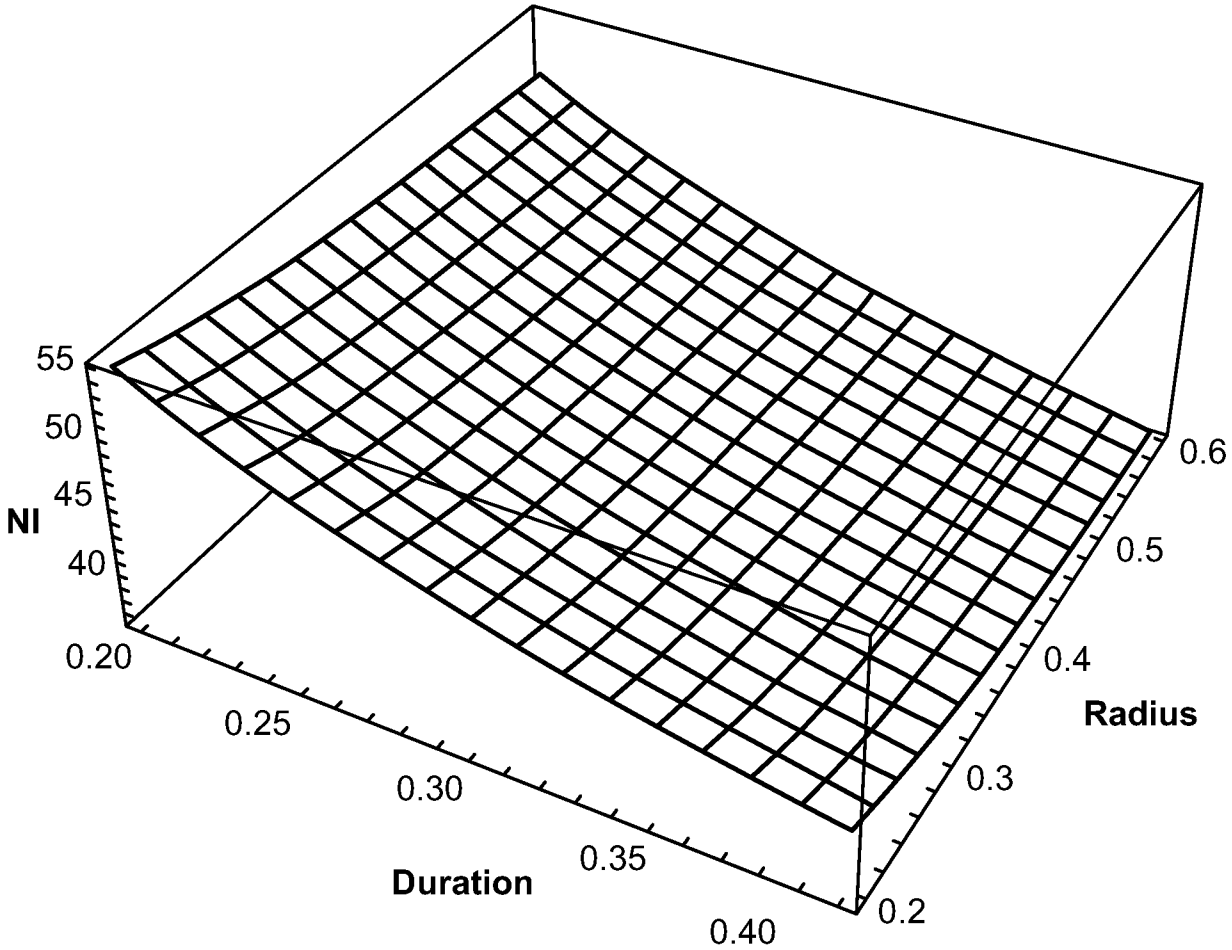

FIG. 17

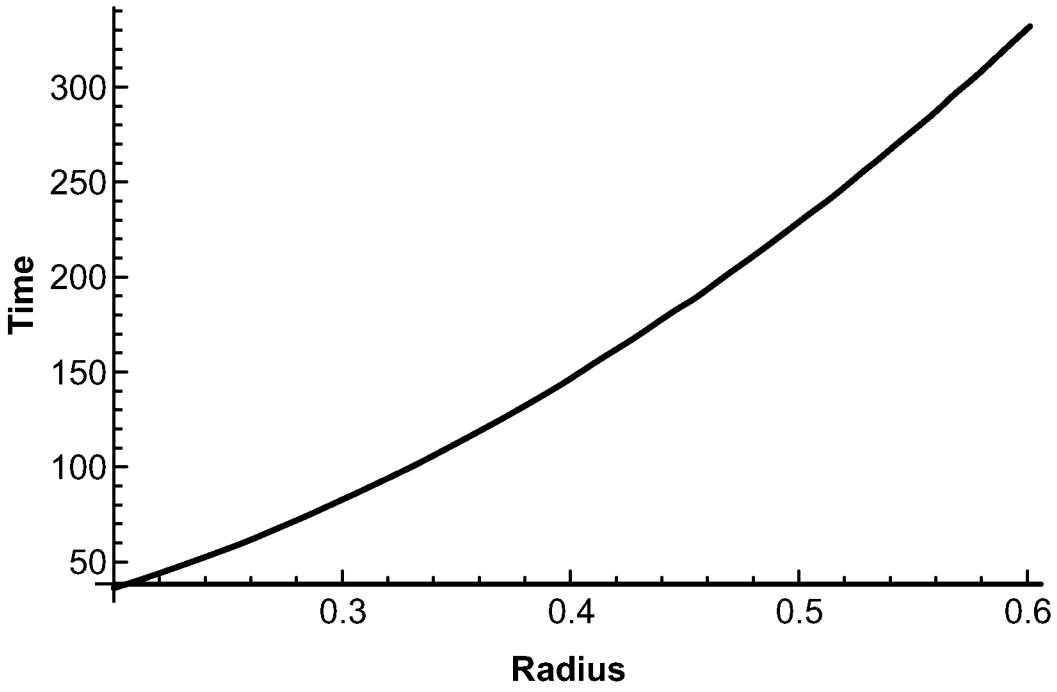

FIG. 18

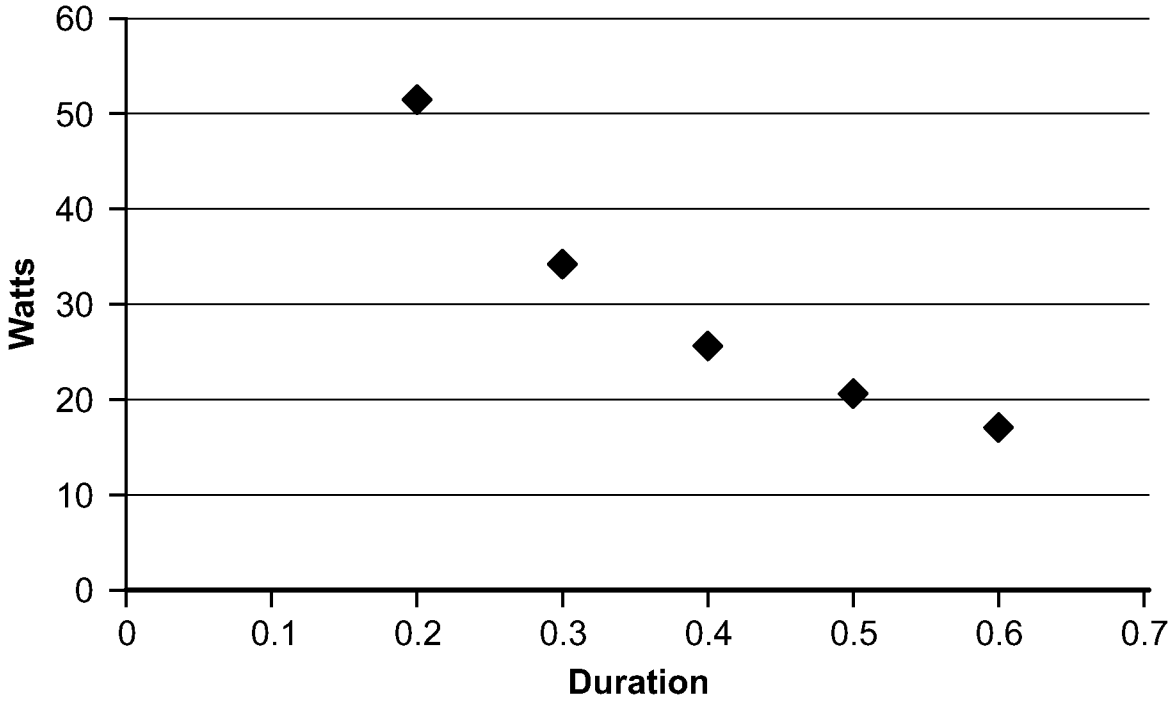
60
50
40
30
20
10
0
Watts
0
0.1
0.2
0.3
0.4
0.5
0.6
0.7
Duration

FIG. 19

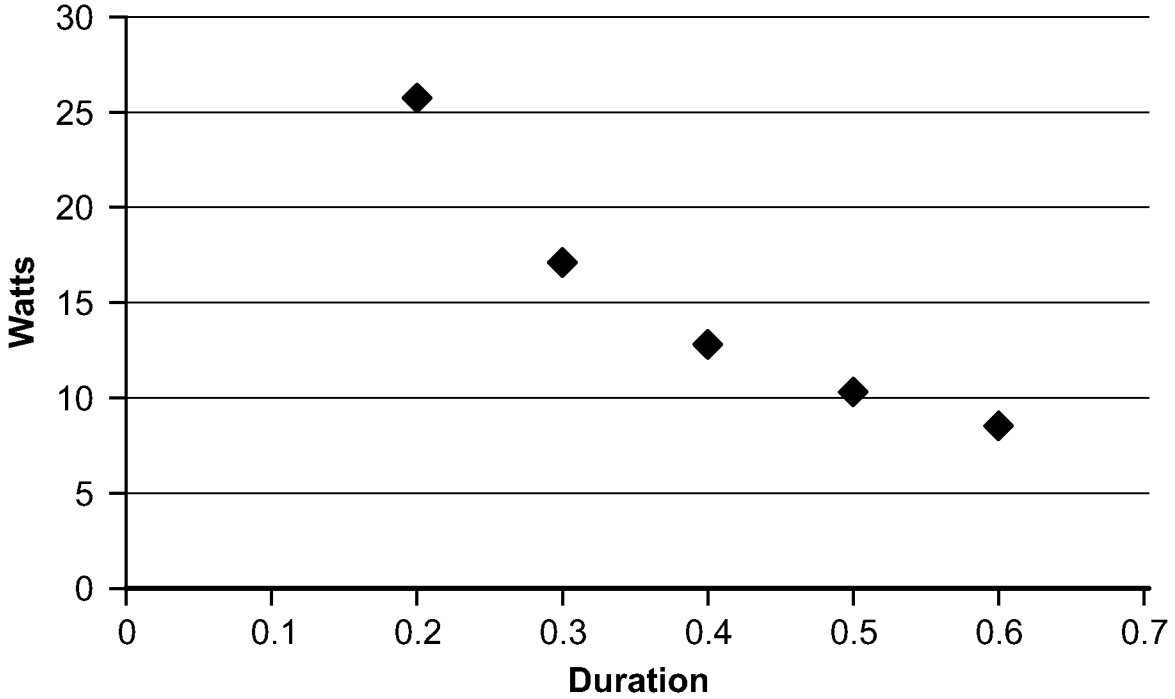
30
25
20
15
10
5
0
Watts
0
0.1
0.2
0.3
0.4
0.5
0.6
0.7
Duration

FIG. 20

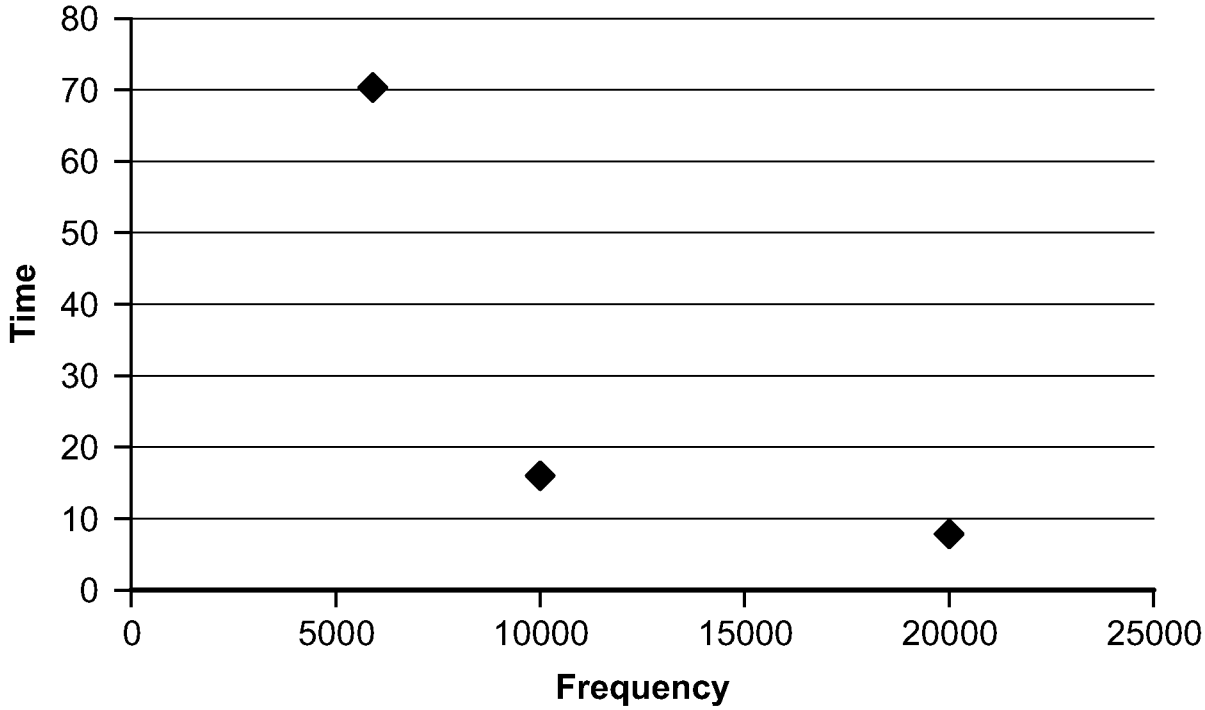
80
70
60
50
40
30
20
10
0
Time
0
5000
10000
15000
20000
25000
Frequency

FIG. 21

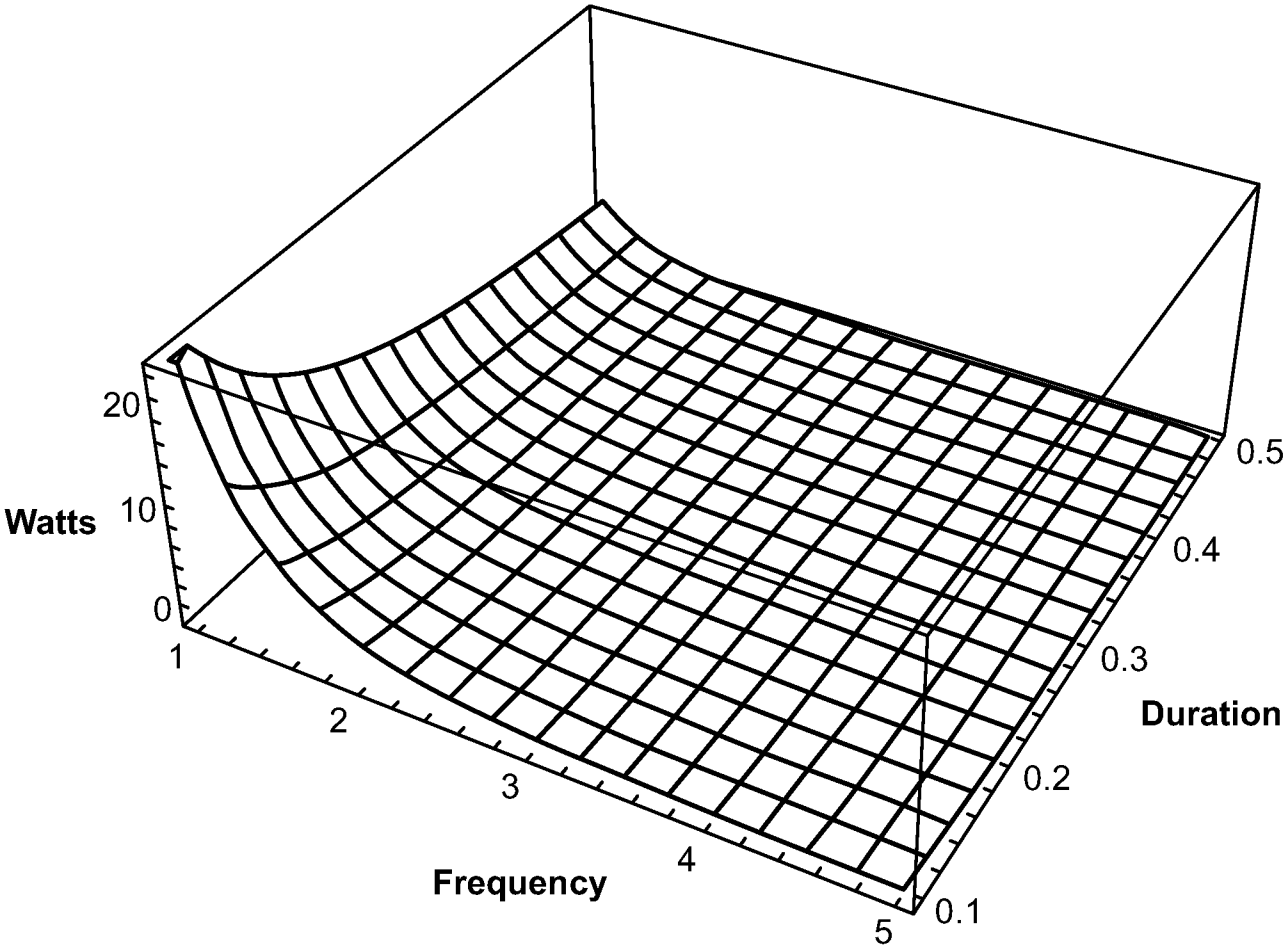

FIG. 22

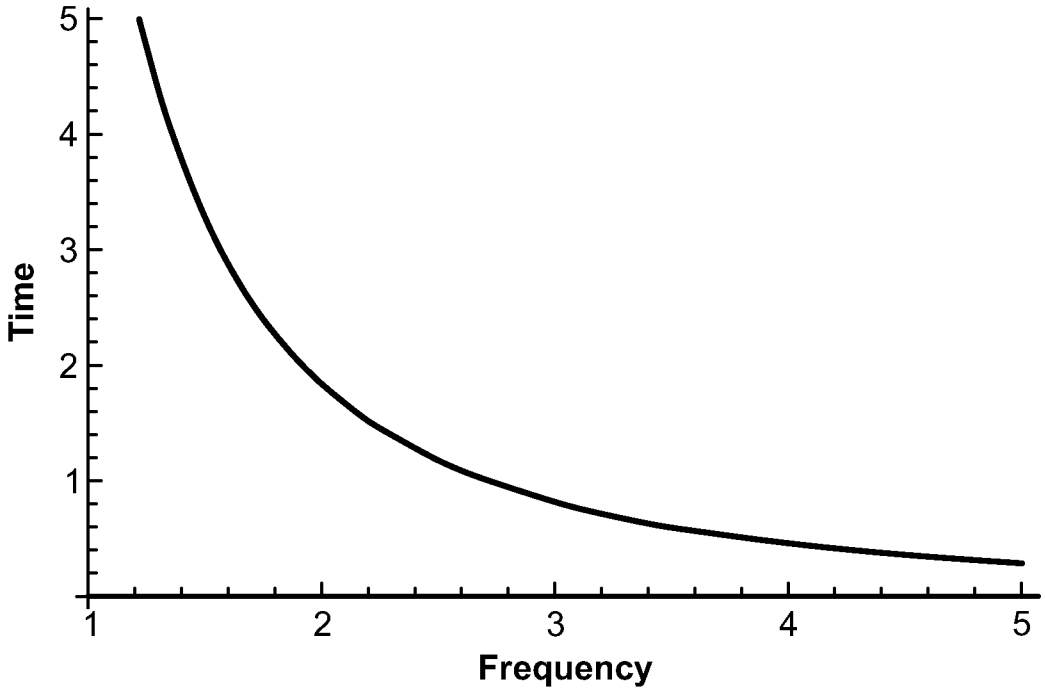
5
4
3
2
1
Time
1
2
3
4
5
Frequency

FIG. 23

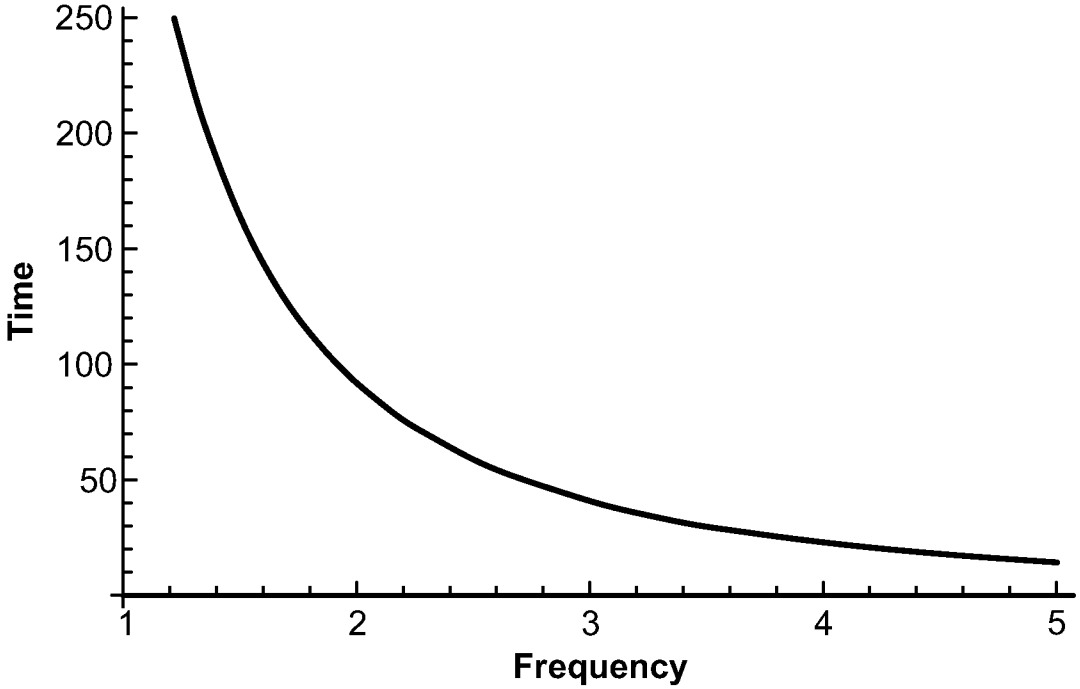
250
200
150
100
50
Time
1
2
3
4
5
Frequency

FIG. 24

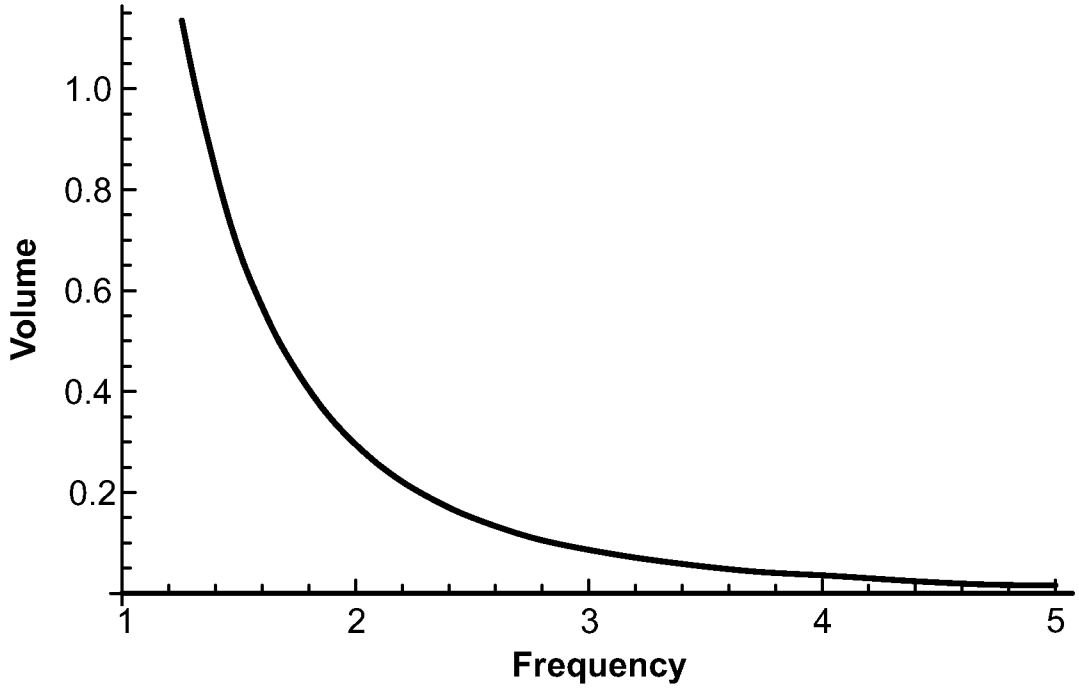
Volume
1.0
0.8
0.6
0.4
0.2
1
2
3
4
5
Frequency

FIG. 25

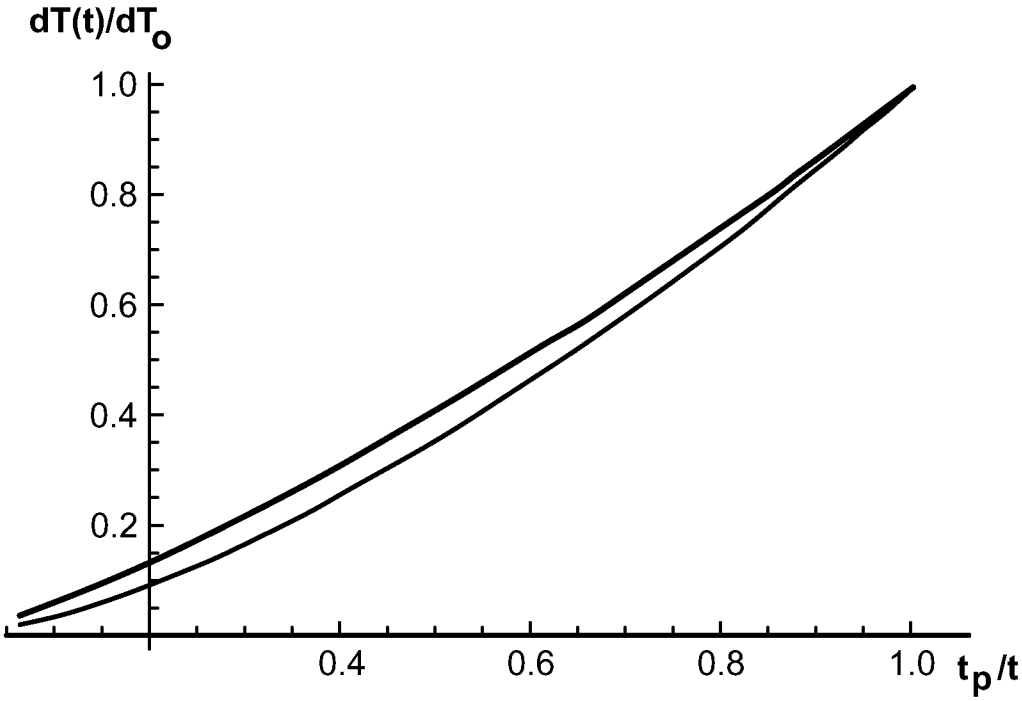
dT(t)/dT$_o$
1.0
0.8
0.6
0.4
0.2
0.4
0.6
0.8
1.0
t$_p$/t

FIG. 26

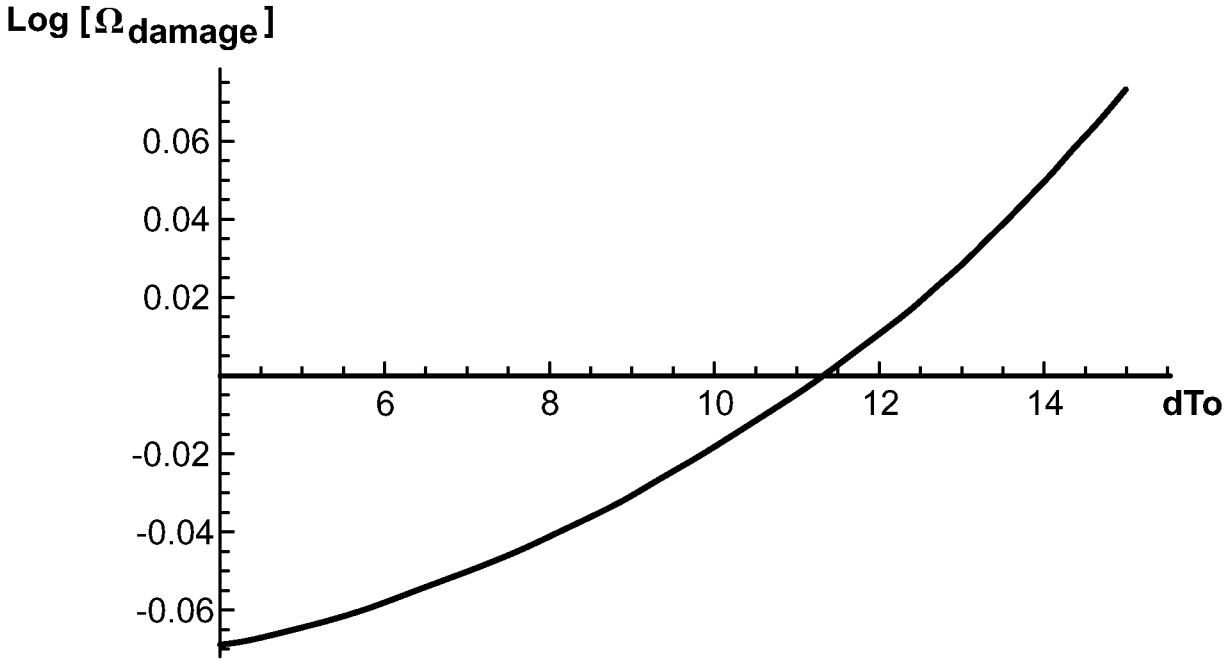
Log [Ωdamage]
0.06
0.04
0.02
-0.02
-0.04
-0.06
6
8
10
12
14
dTo

FIG. 27

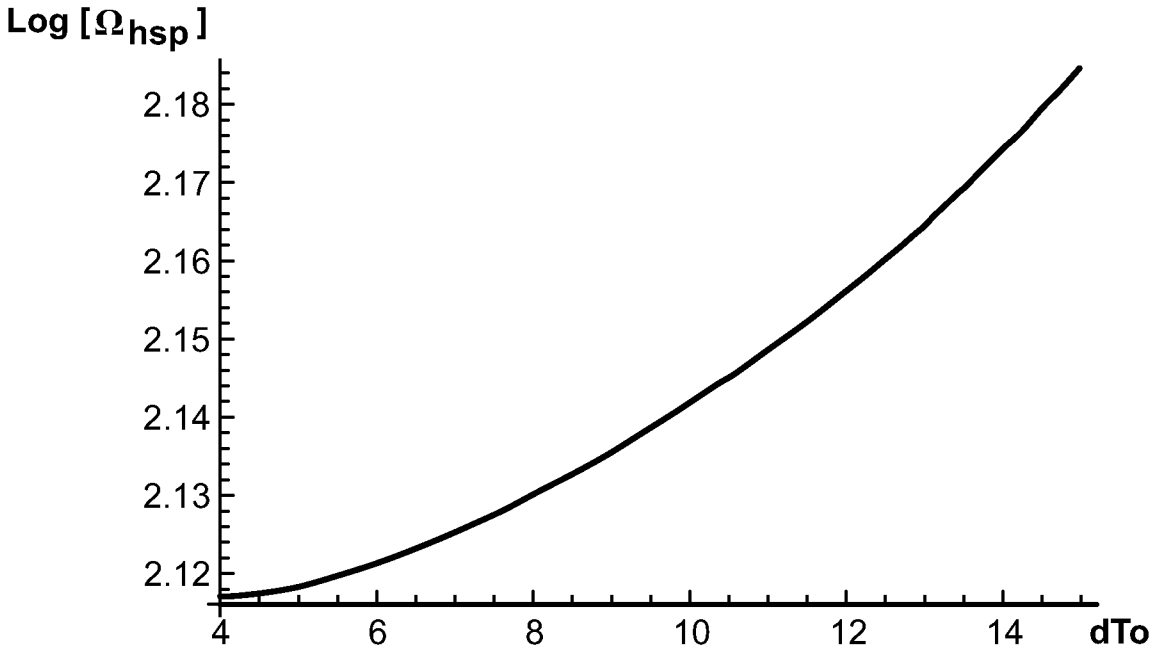
Log [Ωhsp]
2.18
2.17
2.16
2.15
2.14
2.13
2.12
4
6
8
10
12
14
dTo

FIG. 28

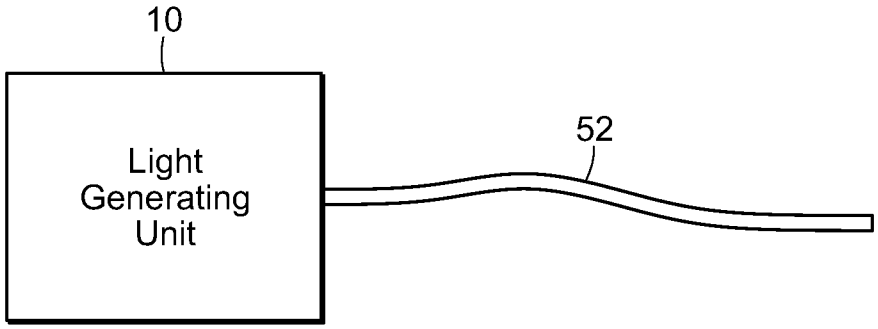

FIG. 29

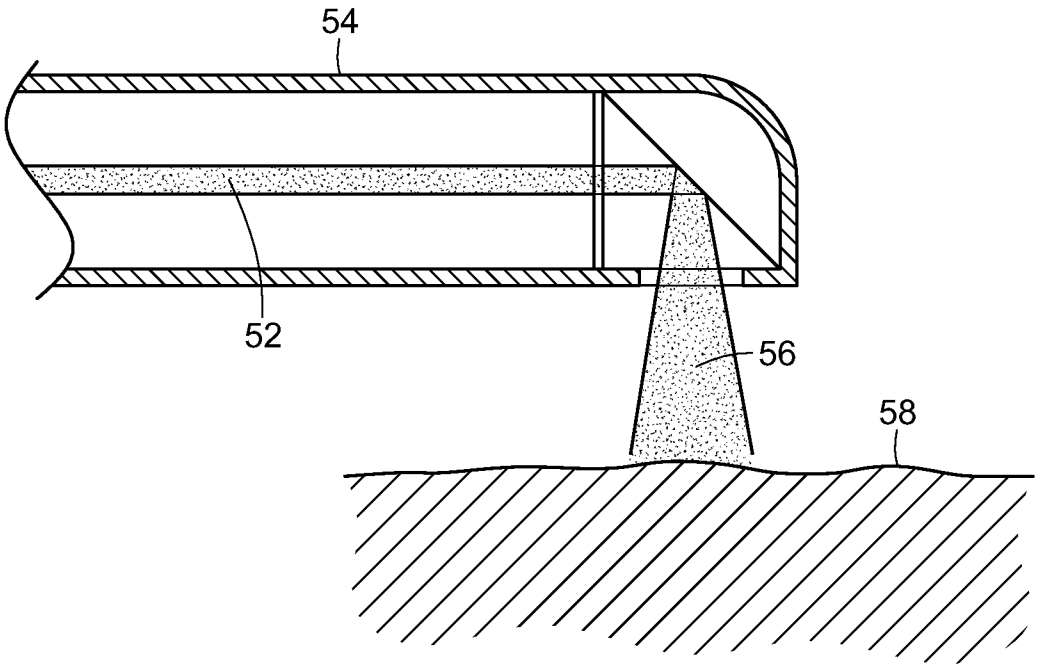

FIG. 30

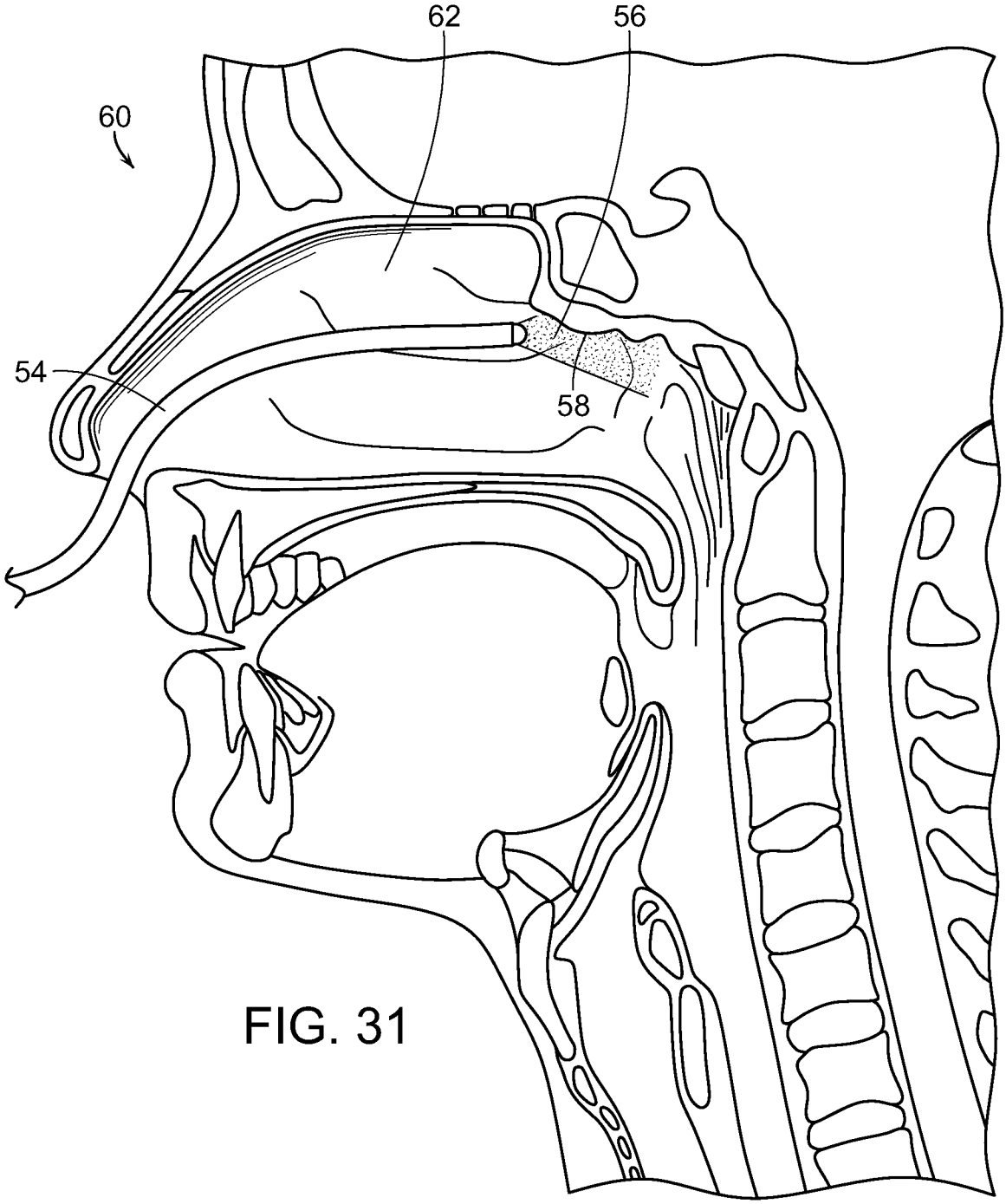

FIG. 31

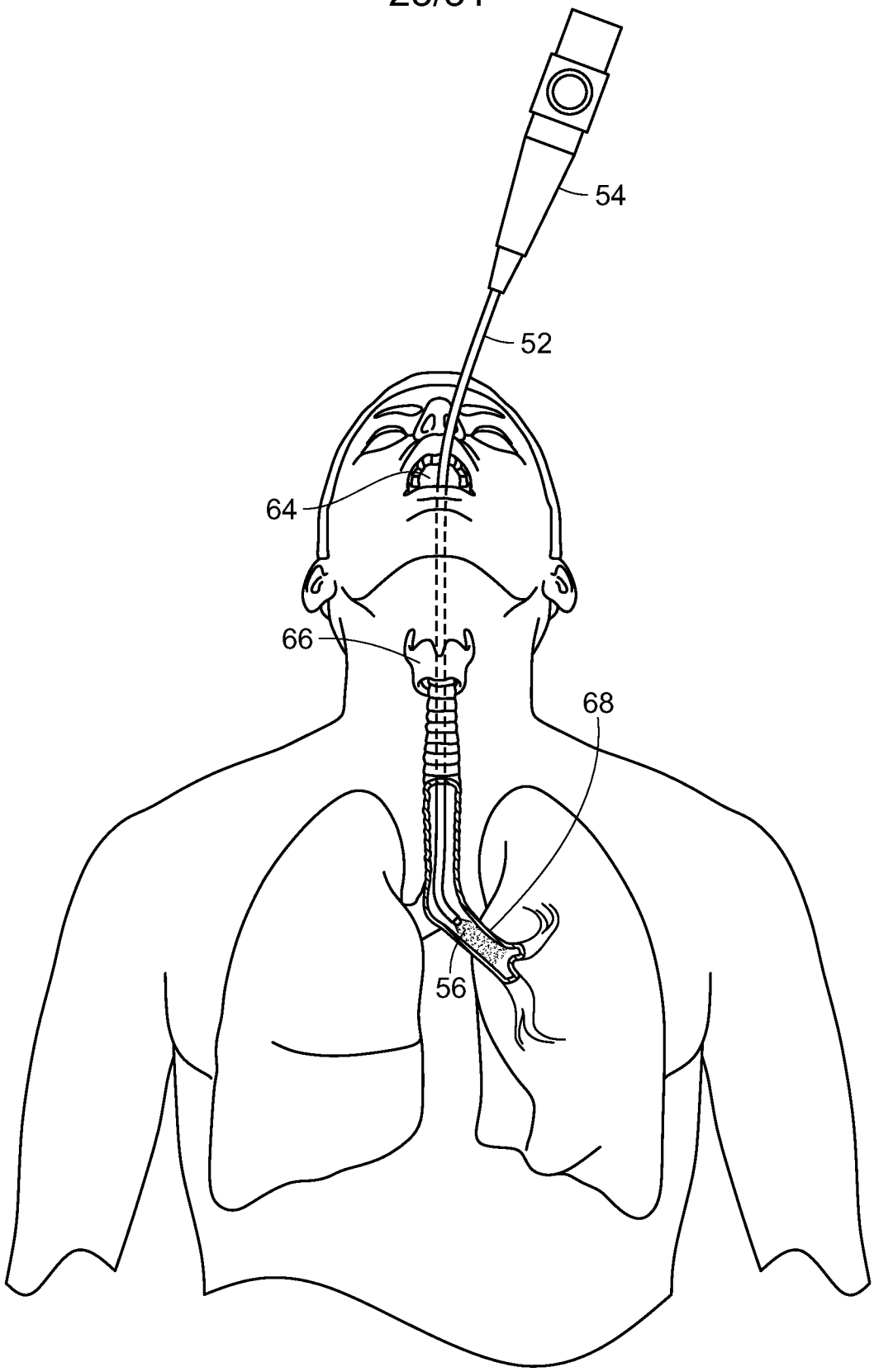

FIG. 32

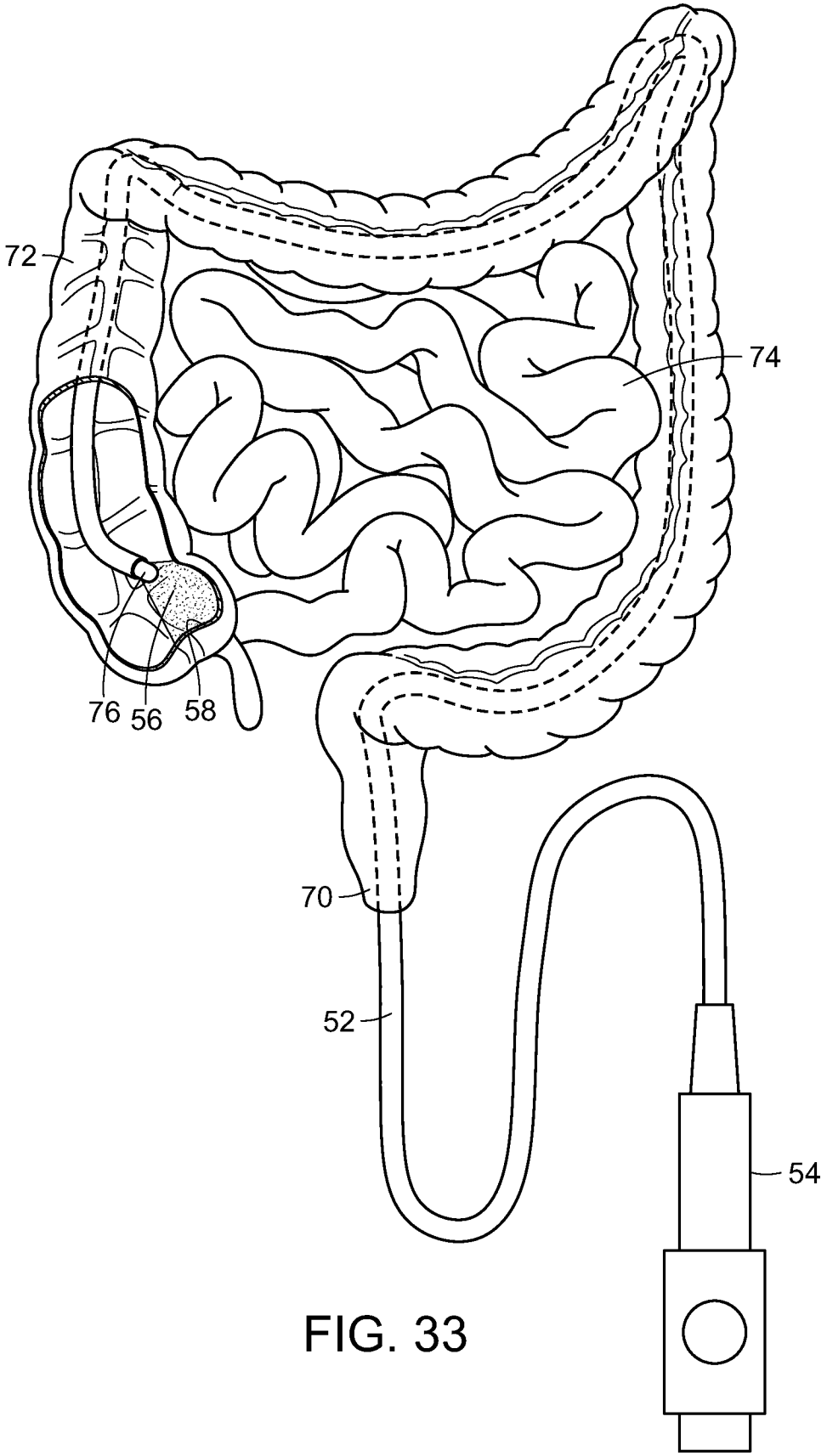

FIG. 33

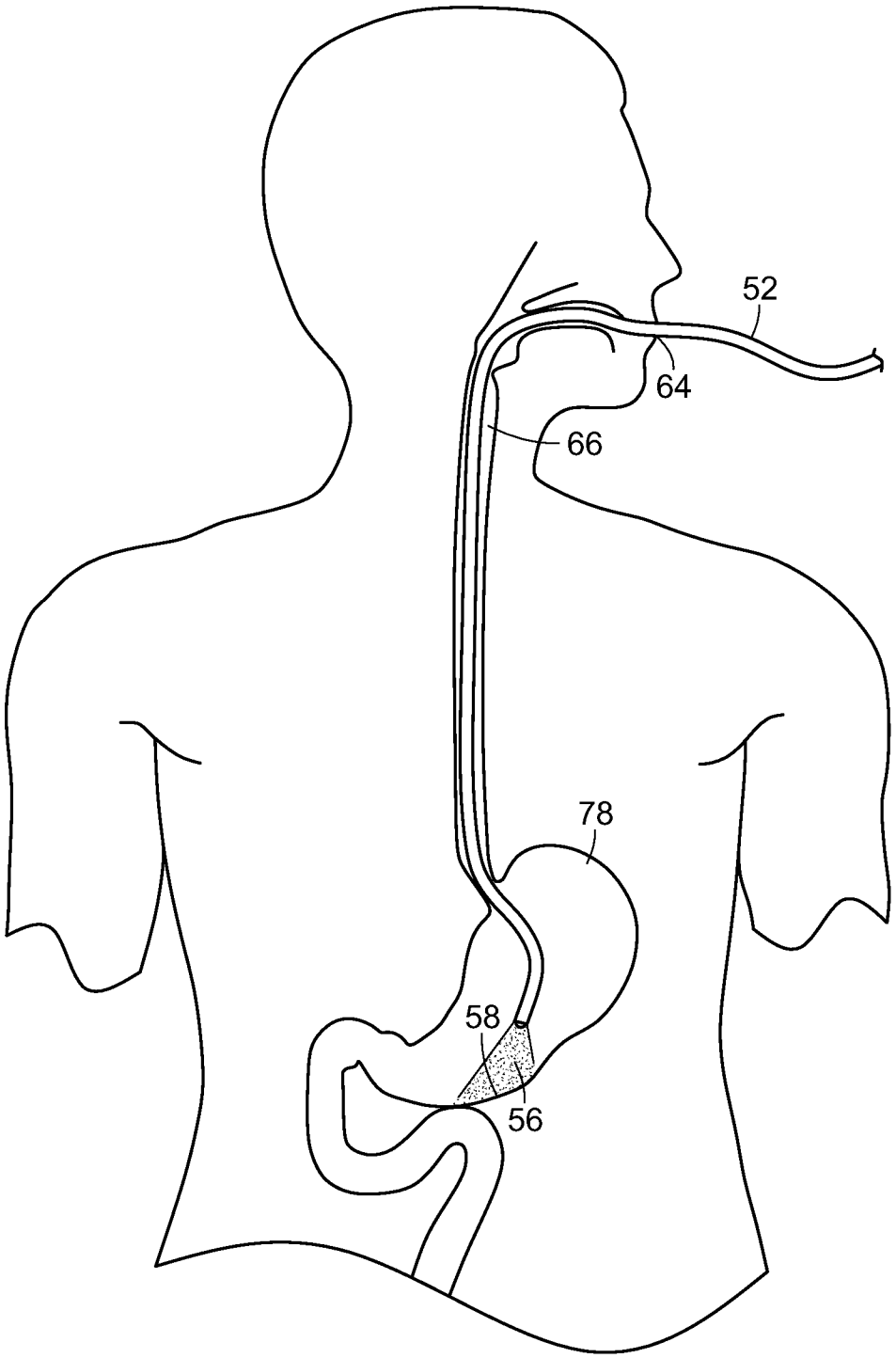

FIG. 34

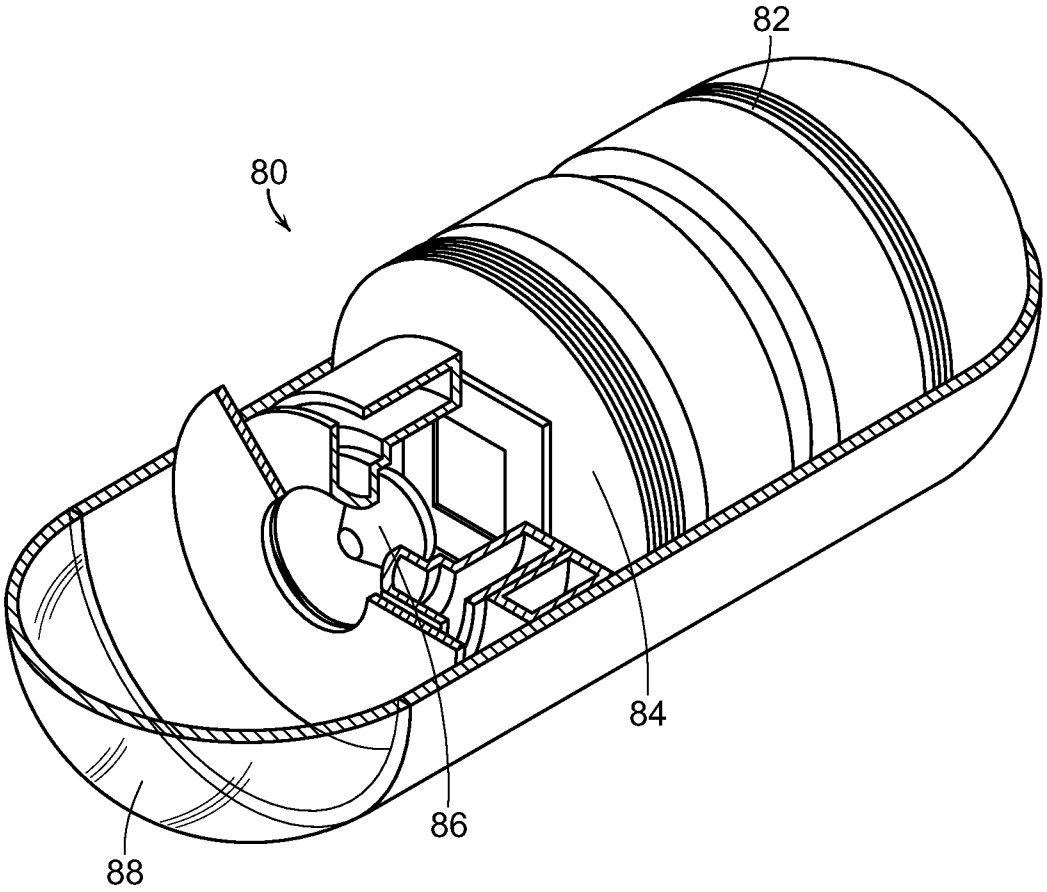

FIG. 35

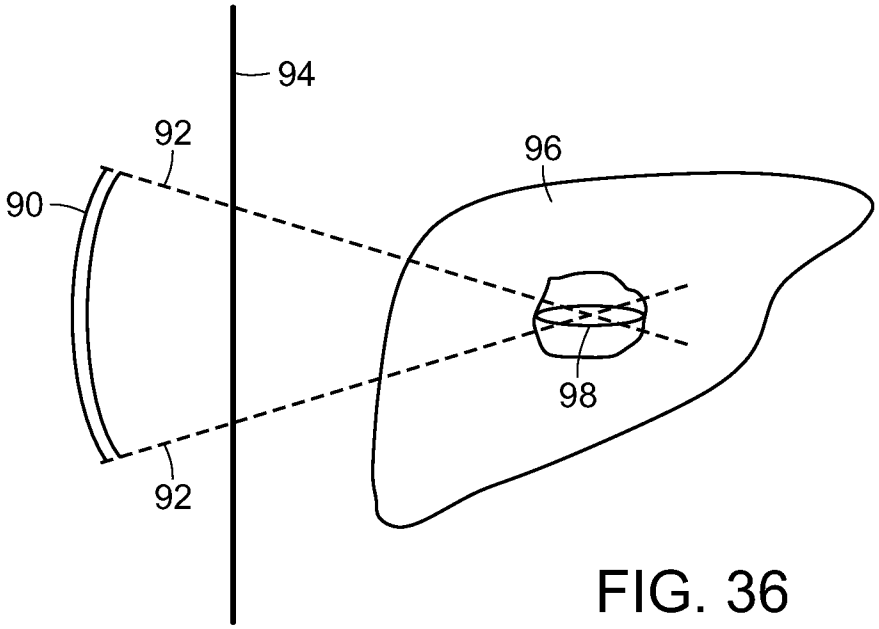
94
92
96
90
98
92

FIG. 36

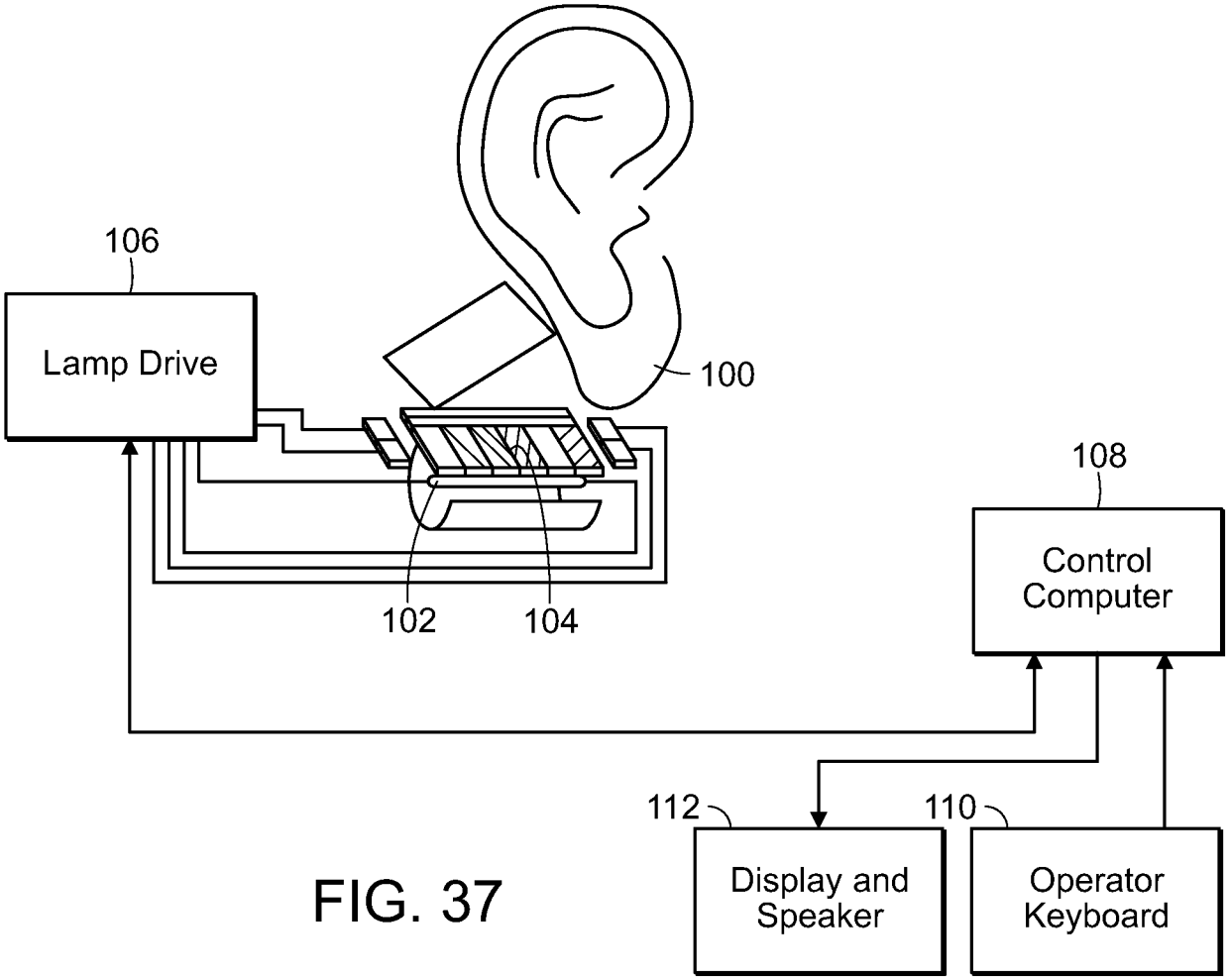
106
Lamp Drive
100
108
Control Computer
102
104
112
110
Display and Speaker
Operator Keyboard

FIG. 37

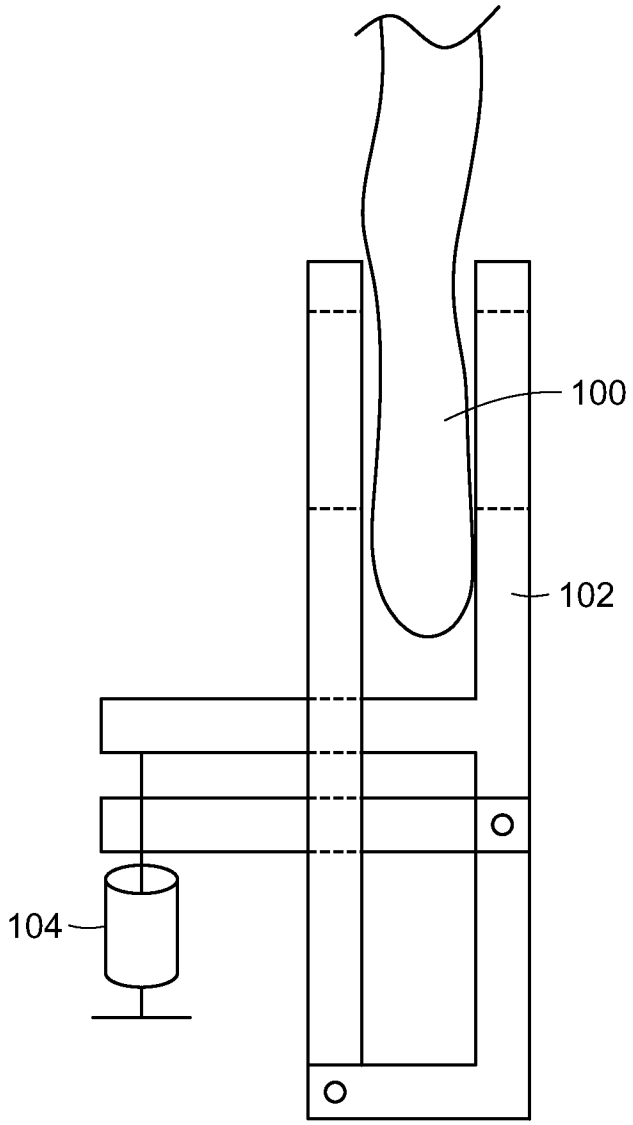

FIG. 38

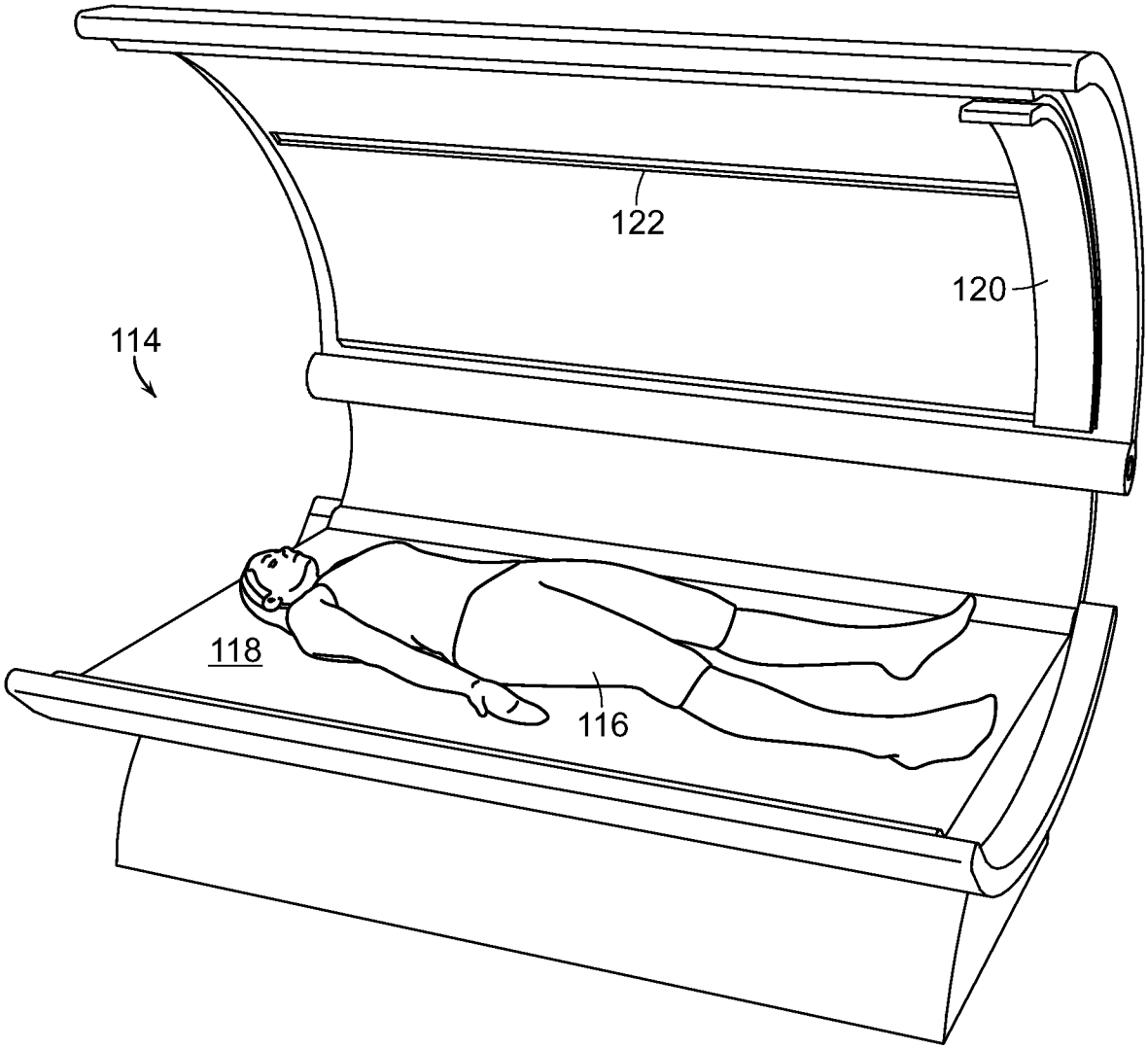

FIG. 39

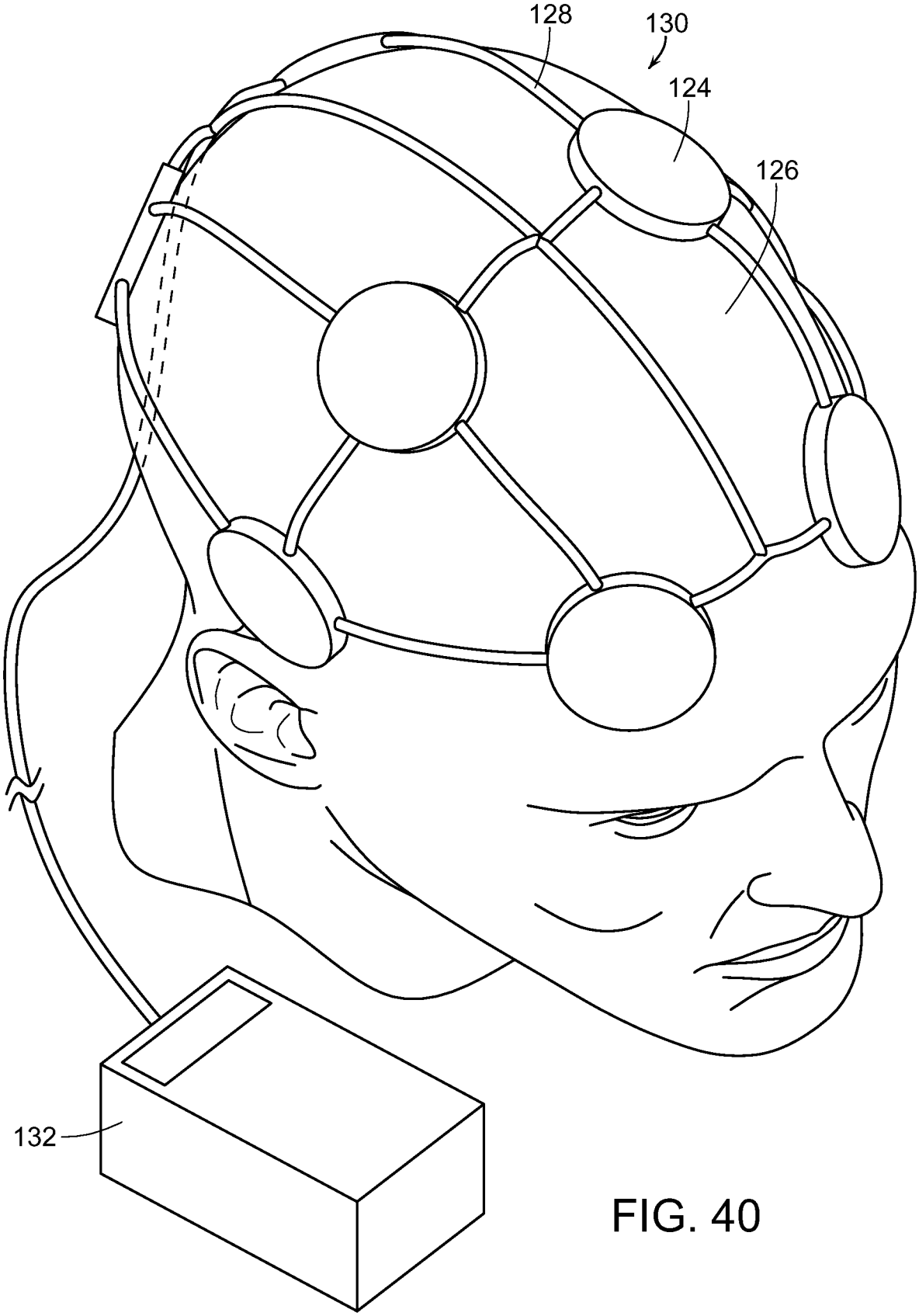

FIG. 40

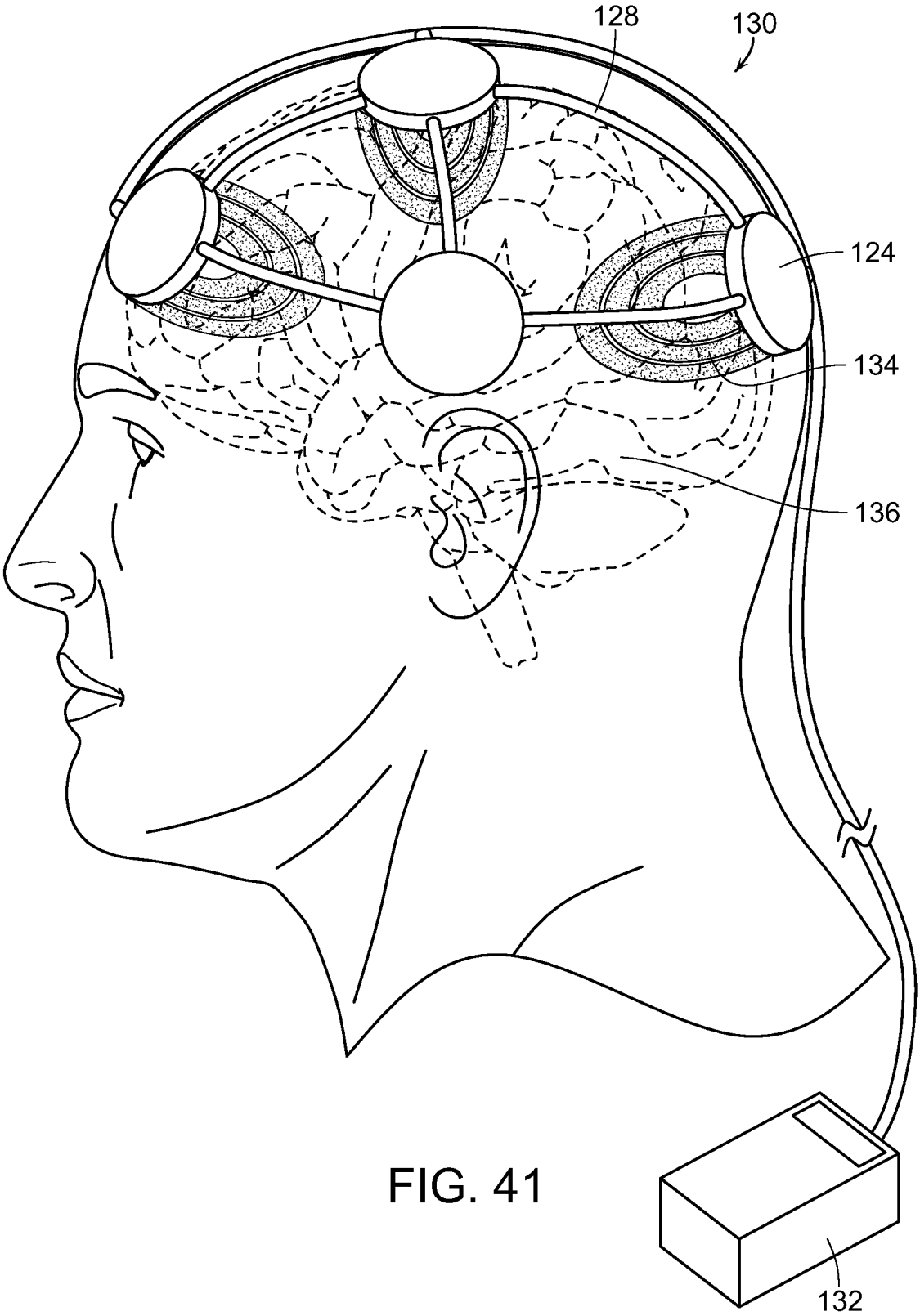

FIG. 41

INTERNATIONAL SEARCH REPORT

International application No.
PCT/US 21/36128

A. CLASSIFICATION OF SUBJECT MATTER

IPC - A61N 1/40 (2021.01)

CPC - A61N 1/403

According to International Patent Classification (IPC) or to both national classification and IPC

B. FIELDS SEARCHED

Minimum documentation searched (classification system followed by classification symbols)
See Search History document

Documentation searched other than minimum documentation to the extent that such documents are included in the fields searched
See Search History document

Electronic data base consulted during the international search (name of data base and, where practicable, search terms used)
See Search History document

C. DOCUMENTS CONSIDERED TO BE RELEVANT

Category*	Citation of document, with indication, where appropriate, of the relevant passages	Relevant to claim No.
X -- Y	WO 2018/031255 Al (OJAI RETINAL TECHNOLOGY, LLC); 15 February 2018 (15.02.2018); entire document, especially para. [10]-[11], [185].	1, 3/1, 4/1, 16, 18/16, 19/16 ---------- 2, 3/2, 4/2, 13-15, 17, 18/17, 19/17
Y	ARENDASH, Garry et al. A Clinical Trial of Transcranial Electromagnetic Treatment in Alzheimer's Disease: Cognitive Enhancement and Associated Changes in Cerebrospinal Fluid, Blood, and Imaging. J Alzheimers Dis. 2019; 71(1):57-82. [online] [retrieved on 2021-08-05]. Retrieved from the Internet: <https://www.ncbi.nlm.nih.gov/pmc/articles/PMC6839500/>	2, 3/2, 4/2, 13-15, 17, 18/17, 19/17
A	US 2015/0018667 A1 (THE UNITED STATES OF AMERICA, AS REPRESENTED BY THE SECRETARY, DEPT. OF HEALTH AND HUMAN SERVICES); 15 January 2015 (15.01.2015); entire document.	1-4, 13-19
A	US 2014/0121631 A1 (SEMNINEX CORPORATION); 1 May 2014 (01.05.2014); entire document.	1-4, 13-19
A	US 2015/0283379 A1 (PACESETTER, INC); 8 October 2015 (08.10.2015); entire document.	1-4, 13-19

☐ Further documents are listed in the continuation of Box C. ☐ See patent family annex.

* Special categories of cited documents:
"A" document defining the general state of the art which is not considered to be of particular relevance
"D" document cited by the applicant in the international application
"E" earlier application or patent but published on or after the international filing date
"L" document which may throw doubts on priority claim(s) or which is cited to establish the publication date of another citation or other special reason (as specified)
"O" document referring to an oral disclosure, use, exhibition or other means
"P" document published prior to the international filing date but later than the priority date claimed
"T" later document published after the international filing date or priority date and not in conflict with the application but cited to understand the principle or theory underlying the invention
"X" document of particular relevance; the claimed invention cannot be considered novel or cannot be considered to involve an inventive step when the document is taken alone
"Y" document of particular relevance; the claimed invention cannot be considered to involve an inventive step when the document is combined with one or more other such documents, such combination being obvious to a person skilled in the art
"&" document member of the same patent family

Date of the actual completion of the international search	Date of mailing of the international search report
5 August 2021 (05.08.2021)	OCT 04 2021
Name and mailing address of the ISA/US Mail Stop PCT, Attn: ISA/US, Commissioner for Patents P.O. Box 1450, Alexandria, Virginia 22313-1450 Facsimile No. 571-273-8300	Authorized officer Kari Rodriquez Telephone No. PCT Helpdesk: 571-272-4300

INTERNATIONAL SEARCH REPORT

International application No.
PCT/US 21/36128

Box No. II Observations where certain claims were found unsearchable (Continuation of item 2 of first sheet)

This international search report has not been established in respect of certain claims under Article 17(2)(a) for the following reasons:

1. ☐ Claims Nos.:
because they relate to subject matter not required to be searched by this Authority, namely:

2. ☐ Claims Nos.:
because they relate to parts of the international application that do not comply with the prescribed requirements to such an extent that no meaningful international search can be carried out, specifically:

3. ☒ Claims Nos.: 5-12, 20-27
because they are dependent claims and are not drafted in accordance with the second and third sentences of Rule 6.4(a).

Box No. III Observations where unity of invention is lacking (Continuation of item 3 of first sheet)

This International Searching Authority found multiple inventions in this international application, as follows:

1. ☐ As all required additional search fees were timely paid by the applicant, this international search report covers all searchable claims.

2. ☐ As all searchable claims could be searched without effort justifying additional fees, this Authority did not invite payment of additional fees.

3. ☐ As only some of the required additional search fees were timely paid by the applicant, this international search report covers only those claims for which fees were paid, specifically claims Nos.:

4. ☐ No required additional search fees were timely paid by the applicant. Consequently, this international search report is restricted to the invention first mentioned in the claims; it is covered by claims Nos.:

Remark on Protest

☐ The additional search fees were accompanied by the applicant's protest and, where applicable, the payment of a protest fee.

☐ The additional search fees were accompanied by the applicant's protest but the applicable protest fee was not paid within the time limit specified in the invitation.

☐ No protest accompanied the payment of additional search fees.