United States Patent [19]

Liu

[11] **Patent Number: Des. 284,983**

[45] **Date of Patent: ** Aug. 5, 1986**

[54] **CONTROL FOR A VIDEO GAME**

[76] Inventor: **Lai-Jin Liu,** 2F. #328 Mu Cha Rd. Sec. 1, Mu Cha Ward, Taipei, Taiwan

[**] Term: **14 Years**

[21] Appl. No.: **556,695**

[22] Filed: **Nov. 30, 1983**

[52] **U.S. Cl.** **D21/48**

[58] **Field of Search** ..... D21/48, 13, 1; D13/12, D13/32, 37; 273/148 B, DIG. 28

[56] **References Cited**

U.S. PATENT DOCUMENTS

D. 271,220 11/1983 Fox et al. D21/13
D. 279,202 6/1985 Kim D21/48

OTHER PUBLICATIONS

Playthings, Jun. 1983, p. 41, "Triga Command".

Primary Examiner—Melvin B. Feifer
Attorney, Agent, or Firm—Cushman, Darby and Cushman

[57] **CLAIM**

The ornamental design for a control for a videogame, substantially as shown and described.

DESCRIPTION

FIG. **1** is a perspective view of a control for video game showing my new design.
FIG. **2** is a front view.
FIG. **3** is a right-side view.
FIG. **4** is a rear view.
FIG. **5** is a left-side view.
FIG. **6** is a top view.
FIG. **7** is a bottom view.
The fragmentary showing of a standard power cord in FIG. **1** is for illustrative purposes only.

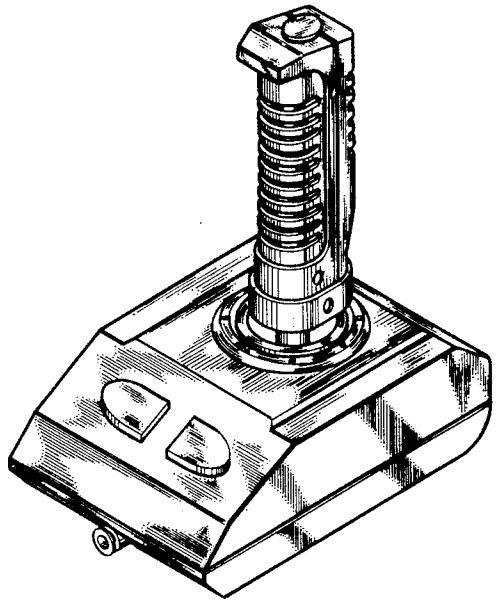

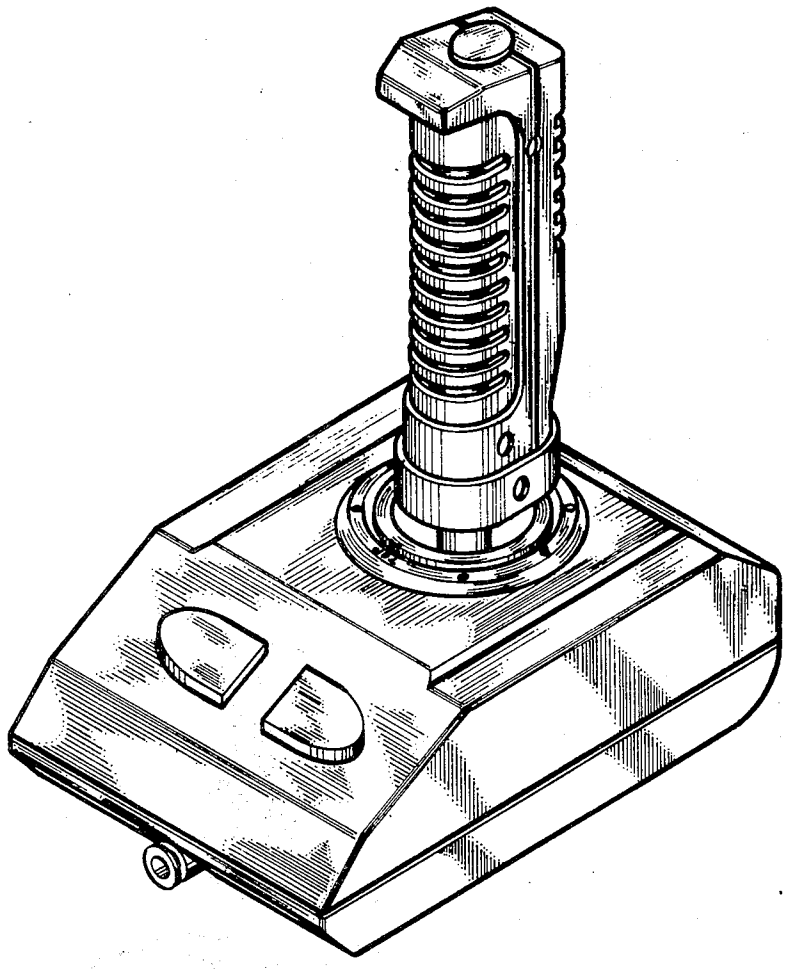

Fig.1

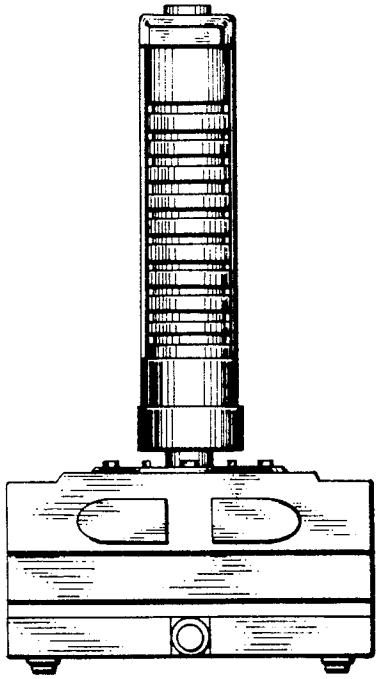

Fig. 2

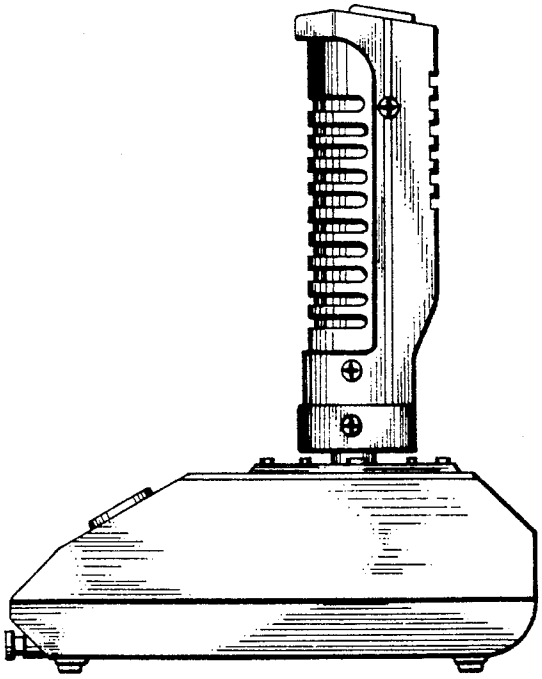

Fig. 3

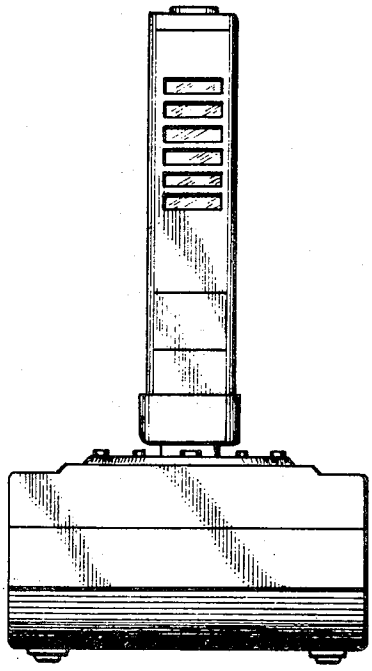

Fig.4

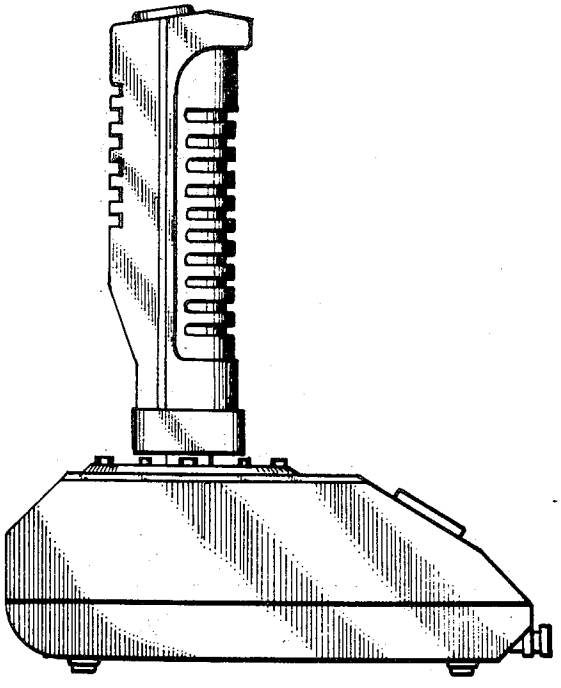

Fig.5

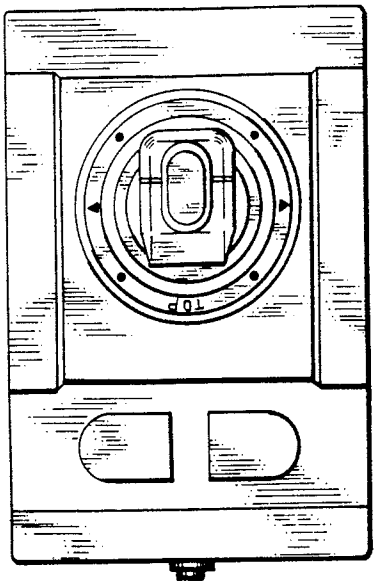

Fig. 6

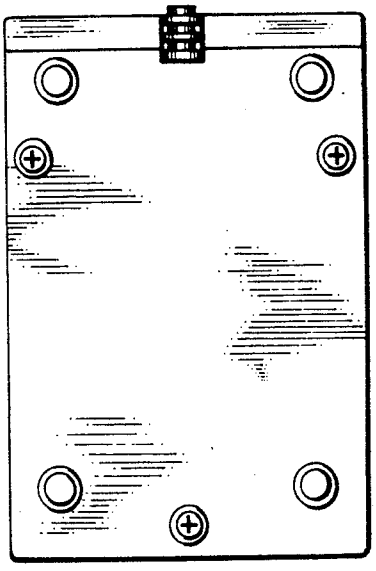

Fig. 7