March 13, 1934. H. L. MYERS 1,951,105

ROTARY DISK EDGING MACHINE

Filed Feb. 3, 1933 4 Sheets-Sheet 1

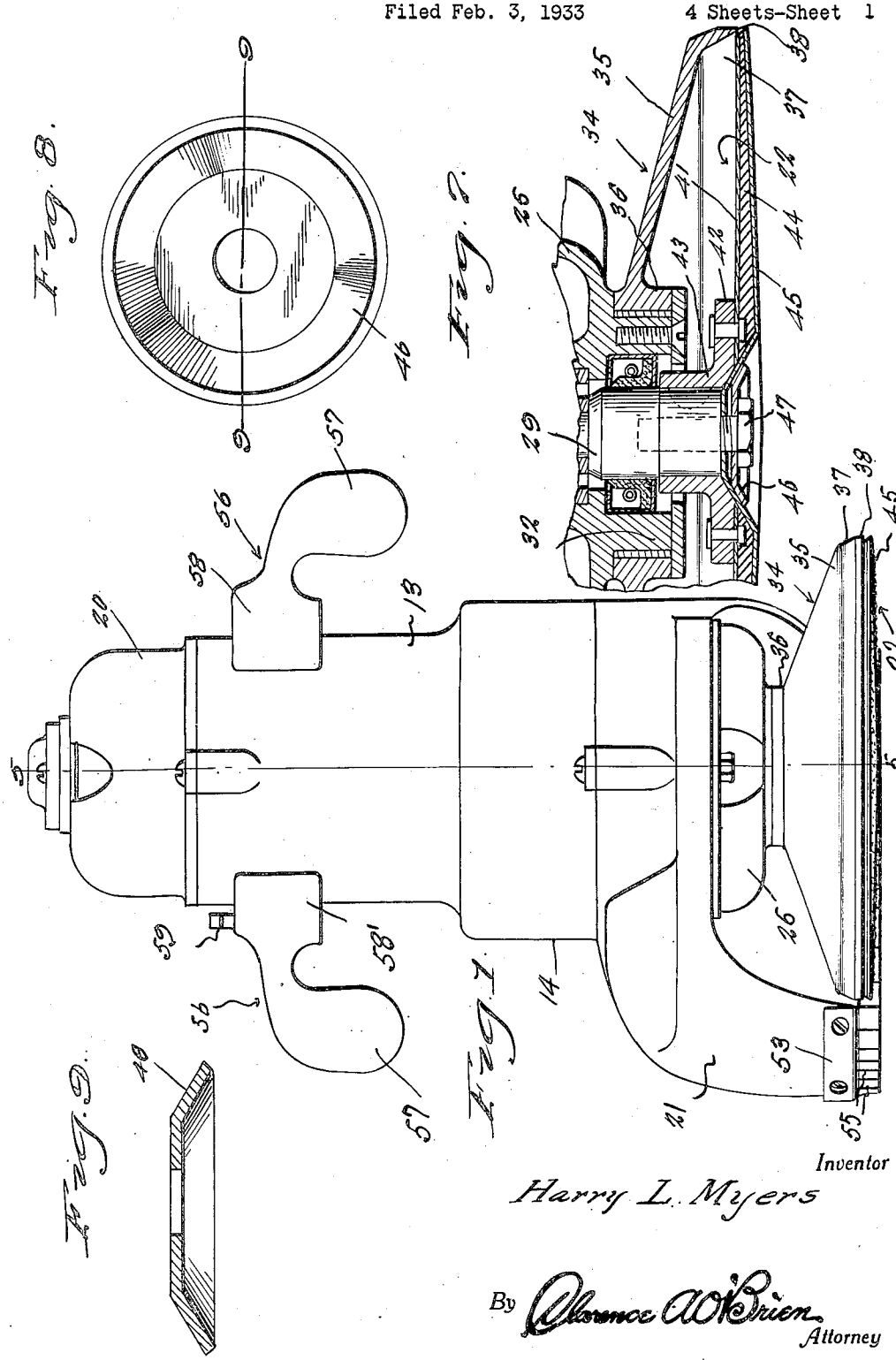

Inventor

Harry L. Myers

By Clarence A. O'Brien

Attorney

March 13, 1934. H. L. MYERS 1,951,105

ROTARY DISK EDGING MACHINE

Filed Feb. 3, 1933 4 Sheets-Sheet 2

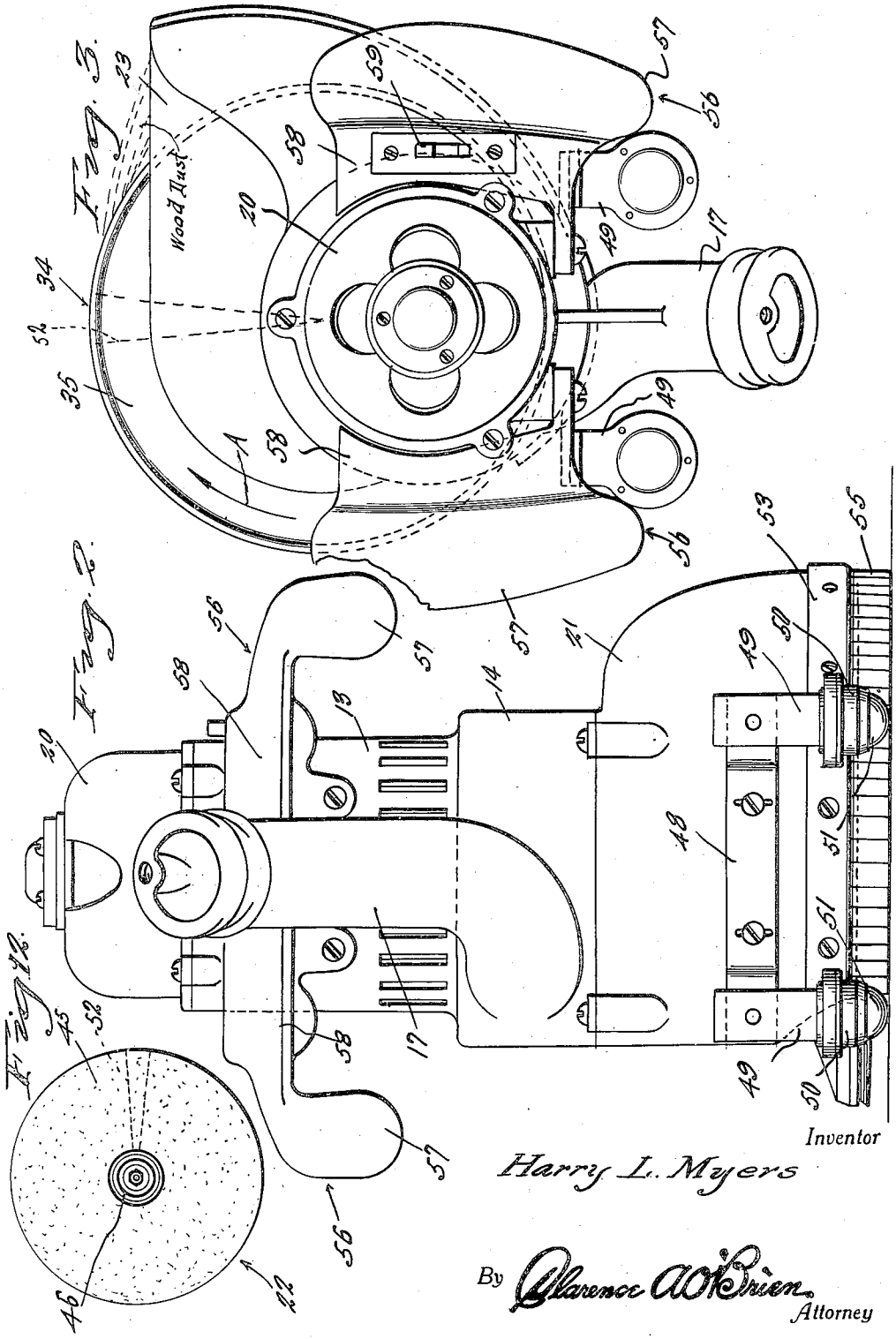

March 13, 1934. H. L. MYERS 1,951,105

ROTARY DISK EDGING MACHINE

Filed Feb. 3, 1933 4 Sheets-Sheet 3

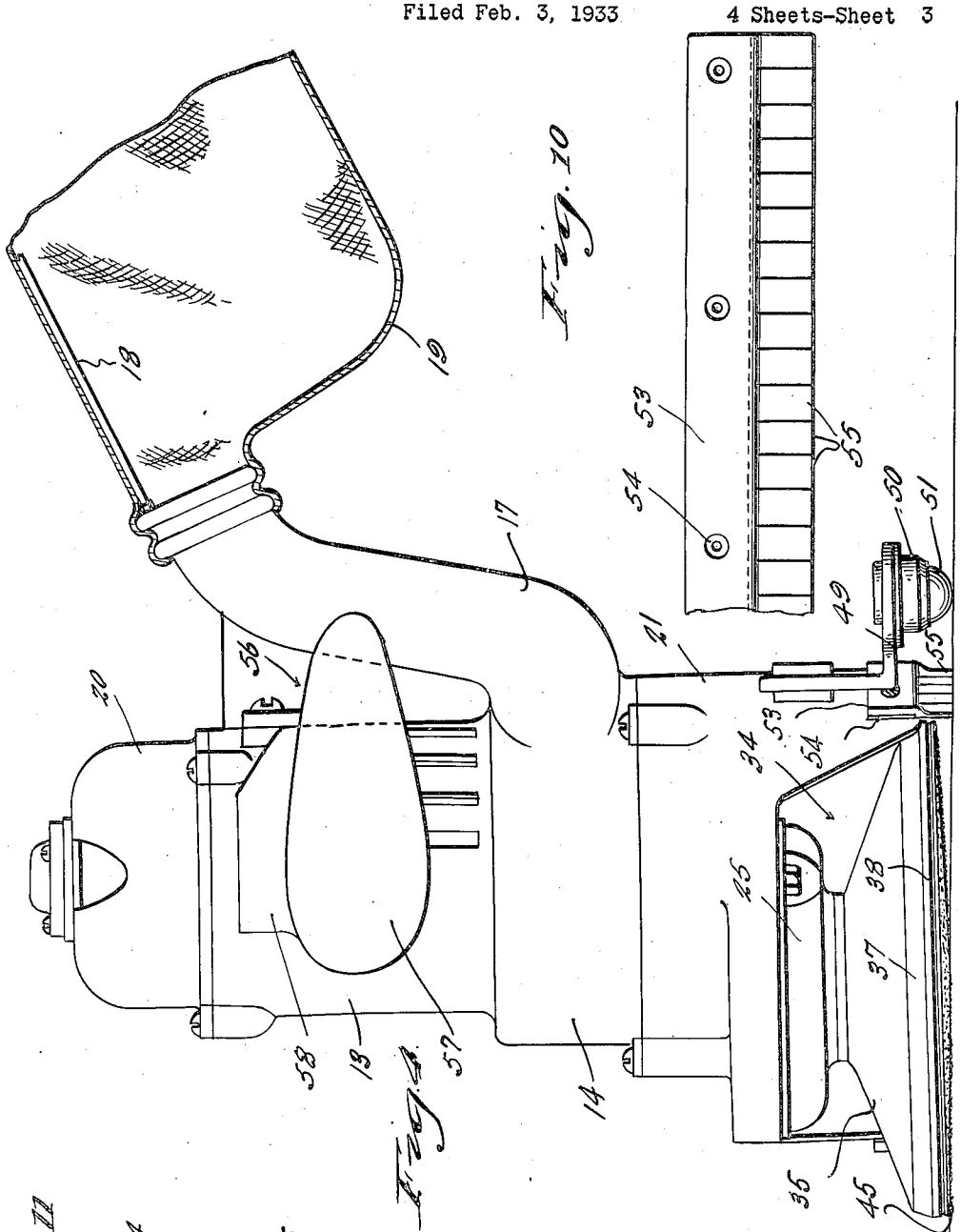

Inventor

Harry L. Myers

By Clarence A. O'Brien

Attorney

March 13, 1934. H. L. MYERS 1,951,105

ROTARY DISK EDGING MACHINE

Filed Feb. 3, 1933 4 Sheets-Sheet 4

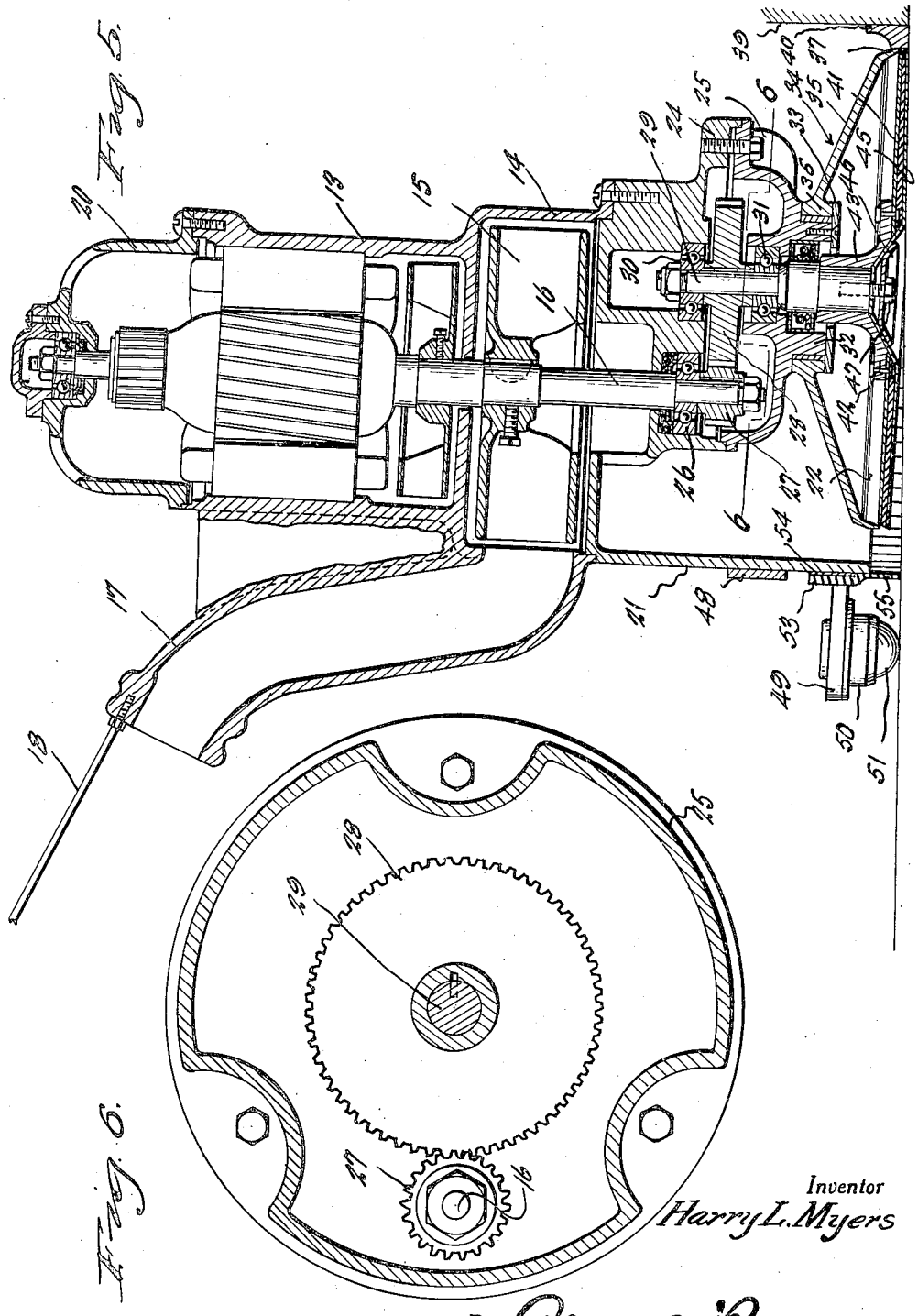

Fig. 5.

Fig. 6.

Inventor
Harry L. Myers

By Clarence A. O'Brien
Attorney

Patented Mar. 13, 1934 1,951,105

UNITED STATES PATENT OFFICE

1,951,105

ROTARY DISK EDGING MACHINE

Harry L. Myers, Toledo, Ohio, assignor to The American Floor Surfacing Machine Company, Toledo, Ohio, a corporation of Ohio

Application February 3, 1933, Serial No. 655,106 REISSUED

14 Claims. (Cl. 51—177)

This invention relates primarily to the surface conditioning and finishing industry and has more particular reference to that branch of the work utilizing electric motor driven abrading machines, especially, but not necessarily, designed for wooden floor and wall surfacing work.

To be more specific however, I point to the development of a relatively small special duty machine which has already become known to the trade as the "American spinner", a unique edging machine.

The term "edging" as applied to surface abrading machines is comparatively new in the prior art. Notwithstanding this, several different styles of machines have now been perfected for performing this otherwise laborious task. Some have adopted a rotary sanding drum or cylinder for the purpose, while others have resorted to the use of an endless abrasive belt and a special resilient pressure shoe for adapting the belt to restricted edging results. Recently, I devised a rotary disk type machine; in fact, the latter which is in the nature of an attachment for a well-known type of American floor surfacing machine constitutes the subject matter of my co-pending application, Serial No. 621,968, filed by me under date of July 11, 1932.

Up to the time of the advent of the rotary disk edger attachment, no one had offered to the trade an abrasive disk type edging machine, the same having been thought to be impractical due to the fact that a high speed driven disk carrying head would invariably ride into destructive contact with the baseboard or its adjacent shoe or bead as it is best known. By incorporating a rotary annular buffer in such machine I was able to make it both feasible and satisfactorily operable for floor edging purposes. This was due to the function of the annulus as a buffer or bumper to bear against the wallboard so that the rotary abrading tool, as a unit, would be held sufficiently far away from the board to prevent marring, and at the same time permitting the abrading action to be carried up within a fraction of an inch of the bead or wallboard as the case may be.

Since developing the aforesaid type of rotary abrasive disk edger attachment I have found that several predominating faults are present and for this reason I have now perfected a self-contained power type rotary disk edger possessing many noteworthy refinements and improvements.

In the first place I have discovered that the trade demands a light-weight all electric motor machine of a sturdy economical type embodying an arrangement of gearing and shafting whereby a comparatively small motor may be utilized for propelling the abrasive disk at an excessively high rate of speed such as is required for effective edging work, and this I have done in the machine herein illustrated and described.

Furthermore, I have discovered that by utilizing a high speed disk the abrading contact area of the disk with the floor or other surface or work being treated must be minimized. Therefore, I have perfected an arrangement embodying ball bearing equipped brackets arranged and mounted for tilting a conoidal disk so that a relatively small restricted segmental portion of the disk contacts the floor to cut a relatively narrow swath, whereby to produce an effective shaving action.

Broadly and briefly stated, the gist of the present invention is found in the provision of a motor equipped mobile casing or support having appropriate handgrips and dust collecting means, a rotary abrading tool, means for tilting the machine and tool to obtain the aforesaid restricted abrading action, and a freely rotatable annulus associated with the tool to permit the operator to press and hold the rotary surfacing disk constantly in surfacing contact with the work while bodily rolling or moving the entire machine in a direction longitudinally of the baseboard or other adjacent surface.

An additional feature of novelty is predicated on the special configuration and fixed relationship of the dust intake nozzle with respect to the mechanical tilting means and work-engaging surface of the tool, wherein the latter surface is disposed diametrically opposite to the carriage or tilting means, the latter being on the rear portion of the machine, and the nozzle located in a fixed position with relation thereto in order that it is appropriately and adequately disposed for unobstructed reception and trapping of the wood dust. Thus, irrespective of the direction of movement of the machine or its position with respect to the work, the nozzle is satisfactorily located to collect substantially all of the wood dust thrown off from the rotary surfacing tool.

Additional features and advantages of the rotary buffer will become more readily apparent from the following description and the accompanying drawings.

In the accompanying illustrative drawings, wherein like numerals are employed to designate corresponding or like parts throughout the views:

Figure 1 is a front elevational view of a rotary disk edging machine constructed in accordance

with the ideas and principles of the present inventive conception.

Figure 2 is a rear elevation thereof.

Figure 3 is a top plan view.

Figure 4 is a side elevational view.

Figure 5 is a central vertical sectional and elevational view, showing the relative association and arrangement of the internal structural details.

Figure 6 is a horizontal sectional view through the lower portion of the structure.

Figure 7 is a fragmentary detail sectional view showing the means for holding the abrasive paper disk removably in place.

Figures 8 and 9 are detail views of the special paper clamping washer.

Figures 10 and 11 are fragmentary elevational and sectional views showing the special fringed dust confining apron.

Figure 12 is a reduced bottom plan view of the rotary abrading tool showing the abrasive paper disk and indicating, in dotted lines, the relatively small segmental area of said disk which comes into effective abradant shaving contact with the floor.

The part hereinafter referred to broadly as the mobile support is of a multiple part type and comprises a vertical electric motor generally designated by the numeral 13, the lower portion of the motor casing being constructed with a depending shell-like portion 14 defining a housing for a rotary dust collecting fan 15. This fan is keyed on the perpendicular motor shaft 16 as shown in Figure 5 and on one side of the fan housing is a suitably shaped upstanding dust-conveying pipe 17 provided with a suspension rod 18 for the dust collecting bag 19 (see Figure 4).

The upper portion of the motor casing may be designated as a removable apertured cap 20 which as shown in Figure 5 is of suitable construction to provide for an end thrust bearing for the motor shaft.

A special hollow casting 21 is removably bolted to the fan housing, this part of the structure being conveniently distinguished as a skirt and having the additional function of a guard for the rotary abrading tool 22 and its associated details. The frontal portion of the skirt is of course open to permit the abrading tool to protrude therethrough as indicated in Figure 3 and it is further shaped as at 23 to provide an appropriate intake for the dust and dirt. Moreover, it is of utmost importance that this skirt or casting 21 is constructed to deliver the dust into the fan housing 14 as shown in Figure 5, as will be noted from the concluding description.

As further shown in Figure 5, the casting is provided with a suitably shaped suspension means 24 to which a special cover fitting 25 is removably bolted. These parts 24 and 25 cooperate in forming an enclosure for the shaft bearings and gearing. For example, a suitable thrust bearing 26 is provided for the lower end of the motor shaft and the extreme reduced lower end of this shaft is provided with a pinion 27 in mesh with a speed reducing gear 28 carried by a stub shaft 29 mounted for rotation in suitable bearings 30 and 31. Advantage is taken of this double shaft and enclosure arrangement by forming the part 25 with a concentric depending neck 32 to which a retaining washer 33 is bolted. This provides an appropriate mounting for the freely rotatable annulus or buffer 34.

In connection with this part 34 it will be observed that it comprises a downwardly and outwardly inclined annular plate 35 having a collar 36 surrounding the neck 32 and resting on the retaining washer 33. The marginal portion of the annular plate is provided with an abutment flange 37 whose lower edge portion is reduced in dimension to form a feather-edge wallboard contacting surface 38, which functions as shown for example in Figure 5. Incidently, in this figure the numeral 39 designates a baseboard, wall board, or wall as the case may be, and 40 indicates the usual shoe or bead against which the feather-edge contacting surface 38 bears to function as an anti-friction buffer and/or stop device. Of course, in some instances the bead 40 is removed under which circumstances the feather-edge surface 38 bears directly against the wallboard, and where no wallboard is used, directly against the wall surface.

As before stated, the numeral 22 designates, as a unit, the rotary abrasive tool. This tool however is actually made up of a plurality of parts. In fact, in the illustration shown in Figure 7 it is of laminated form and in the latter figure the numeral 41 designates a metal backing plate bolted or otherwise secured to an attaching flange 22 carried by a coupling sleeve 43 secured to the stub shaft or tool shaft 29.

The backing plate 41 is of appropriate tensile strength and resiliency to provide the requisite pressure resistant properties. On its underside the backing plate is provided with a covering of rubber, fabric, or other material 44 which provides the requisite traction properties to drive the abrasive paper disk 45. While it is of no particular moment, it is to be observed that the paper disk is renewable and centrally apertured and held removably in place by a dish-like clamping washer 46 which is in turn held in place by a clamping bolt 47. It is to be noticed that the laminated tool (comprising the parts 41, 44 and 45) is of general conoidal form so as to minimize the degree of contact of the abrasive paper with the edge of the floor. Moreover, the tool is in a plane at right angles to the longitudinal axis of the tool shaft 29.

It is to be observed however that this shaft 29 as well as the motor shaft and the entire casing and assembly is tilted through the instrumentality of a suitable truck. The truck shown in Figure 2 is actually made up of an adjustable attaching band 48 provided at its opposite ends with a pair of L-shaped or right angular brackets 49 constructed with sockets 50 containing relatively large ball bearings 51. The idea is to place the rear portion of the machine in rolling contact with the floor and to raise it sufficiently as shown in Figure 5 to tilt the entire machine shaft and tool to the inclined state shown in Figure 5.

Thus, the tilted position of the abrading tool is permanently regulated when the carriage or truck is properly adjusted. The tool however is inherently resilient so that it possesses the requisite yieldable properties to prevent breakage when unusually rough spots are struck in the floor surface. By tilting the tool and machine in this manner it is evident that only a restricted segmental portion 52 (see Figure 12) of the abrasive disk comes into effective shaving or abrading contact with the floor surface.

I next call attention to the rubber apron which is used as a dust retaining means. This is of no particular novelty but as shown in Figures 10 and 11 it comprises a strip of rubber 53 molded on a metal attaching band 54 and having its lower

edge portion slit to provide drag fingers 55. These fingers simply hang down around the elevated edge portion of the skirt 21 as shown in Figure 5 to prevent the particles of abrasive and shavings from being thrown out on the floor at the rear of the machine. Otherwise stated, the fingers confine the dust and permit it to be picked up by the suction fan 15 and elevated up into the dust collecting bag 19.

A machine of this kind is comparatively small and is handled by the user while in a stooping position. Therefore, it is necessary to provide appropriate handles and I have selected handles of the type designated at 56 in Figures 2 to 4 inclusive. As shown in Figure 4, the handgripping portions of the handles 57 are of elongated egg-shaped form to provide convenient grips for the fingers of the hands of the user.

The horizontal connecting web portions 58 are shaped to provide rests for the palms of the hand. It might be pointed out that the average floor surfacing man handling machines of this kind is usually equipped with huge hands and it is therefore necessary to provide these huge handgrips and to make them sturdy so as to permit the operator to partly rest his weight on the webs 58 while securely catching hold of the grips 57 to successfully manipulate the machine. Of course, the machine is practically regulated when once the ball bearing carriage at the rear is set. In other words, this tilts the abrasive tool to the desired angle and all that the operator has to do is to shove the feather-edge contacting surface 38 of the flange 37 up against the wall or the bead as the case may be as shown in Figure 5, hold the machine down, and at the same time roll it longitudinally of the wall board 39. In so doing, the abrasive disk cuts a small swath, the machine travels along on the balls 51 and is held away from the bead 40 by the rolling idling action of the buffer 34.

Particularly do I wish to emphasize the ability of the user or operator to press and hold the rotary surfacing tool constantly in surfacing contact with the floor while rolling or moving the machine bodily in a direction longitudinally of the washboard, during which rolling action the limited surfacing area of the abrasive paper is mechanically regulated and held in surfacing contact with the floor.

Furthermore, I deem it of extreme importance to again emphasize the rotary abutment annulus 34 which functions as a gauge in limiting the approach of the machine to the wall, bead, baseboard or trim as the case may be. Secondly, it serves as a pressure or thrust device and due to its antifrictional characteristics aids the operator in equally balancing and holding the entire machine in a correct position, whereby to minimize jumping and accidental displacement.

Then too, it performs in the capacity of an idling guidewheel in that it permits the machine to be shoved against the wall and gradually moved longitudinally of the baseboard as the abradant shaving action is carried on. In fact, this annulus or buffer 34 has many other commercial aspects and advantages and is essentially the means which permits the edging results to be satisfactorily accomplished with a rotary abrasive disk.

In addition to the idling buffer 34 I wish to emphasize the right-angular placement of the laminated tool with respect to the tool shaft 29 wherein the tool possesses the requisite inherent resilient properties to allow flexing and yet to resist undue flexing so that it will insure proper pressure of the paper against the floor but will at the same time allow it to compensate for rough spots in the floor which might otherwise break the tool.

Next I wish to emphasize the arrangement whereby the simple fixtures or brackets on the rear part of the machine carrying the balls 51 form a carriage or truck to facilitate movement of the entire machine as a unit and to at the same time tilt the entire machine, shaft, tool, and buffer 34 to the position shown in Figure 5 of the drawings whereby to permit the limited abrading and edging action to be satisfactorily accomplished.

There is no guess-work with the provision of this carriage; that is to say, the operator does not have to depend on his energy to hold the disk in place. In other words, it is mechanically set so that it takes the proper inclination and all that the operator has to do is to move the machine longitudinally of the wallboard and press it against the wallboard. There is no chance of damaging the wallboard due to the presence of the buffer 34.

The dust-collecting means, fringed apron, and other means are merely incidental and are therefore of no special importance. In a machine of this kind however, which is comparatively small, it is of importance to provide the double shaft and gearing arrangement whereby a small inexpensive motor may be utilized for propelling a high speed abrasive disk.

At this point, attention is again directed to the unusual and ideal assemblage illustrated in Figure 3 for picking up and collecting the wood dust as it is swept from the segmental abrading area 52 into the dust intake chamber or nozzle 23. As previously pointed out, the right hand frontal portion of the special casting 21 is offset and then tapered rearwardly to define the dust intake chamber, better known in the art as the intake nozzle 23. This nozzle has a definite or fixed relationship with respect to the truck or carriage (parts 48, 49, 50 and 51) and the restricted abrading segmental portion 52 of the rotary disk-like abrading tool. As a matter of fact, the effective abrading area 52 is substantially diametrically opposite to the truck and the truck is on the rear portion of the machine, that is, with respect to the working or frontal portion of the machine. The extreme intake end of the nozzle is disposed to retain a fixed relation with respect to the truck wheels no matter at what angle the machine may be operated. This is exceptionally important because the point of contact (52) on the front of the disk is always taking place at a fixed relation with respect to the dust nozzle 23, no matter if the machine is swung around at ninety degrees or any other angle desirable to accomplish the expected result. This relationship to the disk contact is always retained and is of great importance due to the fact that if the dust nozzle is not properly positioned to receive the bulk of the wood dust as it is thrown off the edge of the surfacing disk, it does not satisfactorily collect all of the wood dust. It is evident, of course, that the disk rotates in the direction of the arrow A and that virtually all of the dust is literally swept into the intake nozzle in a direct and effective manner.

Finally, I feel that it is desirable to attach importance to the diametrically opposed handles 56 which are actually in the nature of special castings secured to the motor and having the depending or vertically disposed egg-shaped hand-

grips 57 for convenient fingerwork, and the attaching webs 58 which are shaped on their tops to provide comfortable rests for the palm portions of the hands. This not only permits the machine to be lifted and carried but permits the operator to support a part of his bodily weight on the machine whereby to relieve him of an expenditure of undue energy.

In conclusion, and as shown in Figure 3, I have found it expedient and practical to build the electric switch 59 into one of the handles. This however is of no importance so far as the novelty of the case is concerned.

The reader has now observed the preferred embodiment of the invention as described and shown in the drawings and understands what features are admitted to be old and what features are claimed to be new. In order that a clear and comprehensive knowledge of the novelty may be had, attention is now invited to the following structure defining claims.

I claim:

1. An edging machine of the class described comprising a vertically elongated motor and casing unit, a substantially vertical shaft mounted for rotation in bearings in said casing unit, operating means for the shaft, a disk-like abrading tool operatively attached to the shaft and disposed in a plane substantially parallel to the work, means on said unit for tilting the support, shaft, and inclining the tool to limit the abrading contact area thereof with the work, an annulus mounted for idling rotation on the casing above the tool and provided with a marginal abutment flange located in close proximity to the edge portion of the tool, said flange having its extreme lower edge portion reduced in dimensions to provide a feather-like edge to rest against the bead or wall-board as the case may be, and to prevent the tool from coming into destructive contact with the bead.

2. An edging machine of the class described comprising a mobile support including a relatively small vertical motor including a shaft provided at its lower end portion with a pinion, a tool shaft mounted for rotation in bearings in said support and occupying a substantially vertical position and parallel to the motor shaft, a relatively large power take-off gear carried by the tool shaft and in mesh with said pinion, a rotary disk abrading tool comprising a flexible backing attached to the lower portion of the tool shaft, a removable abrasive disk associated with the backing, clamping means for holding the disk in position on the tool-shaft, diametrically opposed handles attached to the motor, and a carriage for the support comprising a pair of spaced brackets provided with universally mounted floor contacting balls, a connecting band for said brackets, and means for adjustably securing the band to the support whereby to permit the carriage to be regulated for tilting the entire support, motor shaft, tool shaft and tool, whereby to restrict the abrading area of the abrasive disk to a predetermined limited degree, and an annulus mounted for free rotation on the support above the tool, the annulus being substantially equal in diameter to the tool and formed on its outer edge with a depending marginal flange whose extreme lower edge portion is restricted in dimensions to provide a feather-edge trim contacting surface, said contacting surface projecting slightly beyond an adjacent portion of the tool to prevent said portion from coming into contact with the trim.

3. An edging machine of the class described comprising a vertical motor formed with a fan housing, a casting secured to the fan housing and depending therefrom and provided with a plurality of bearings, said casting being formed to provide a tool guard and dust intake means, a dust bag, and means for connecting the dust bag with the fan housing, a substantially vertical tool shaft mounted for vertical rotation in bearings in said casting, an operating connection between the motor and shaft, an abrading tool comprising a flexible backing disk with traction means on its underside, a renewable abrasive disk, and clamping means for securing the disk to the shaft, an annulus mounted for rotation on said casting and formed with an abutment flange at its outer edge portion to prevent contact of the edge portion of the tool with adjacent wall trimming, diametrically opposite handles secured to the upper portion of the motor, a pair of L-shaped brackets provided with sockets, floor contacting balls mounted in said sockets, means connecting said brackets together in assembled relationship, said means being adjustably connected with the rear portion of the aforesaid casting whereby to permit the entire machine to be tilted to incline the shaft and tool in order to limit the degree of abrading contact of the tool with the floor in the manner described.

4. A hand type rotary disk surfacing machine bodily liftable by the operator and comprising a relatively small vertical motor including a casing formed at its bottom with an annular portion defining a fan housing, a skirt-like casting secured to and depending from the fan housing and having the major portion of its frontal part cut away, said casing and casting being provided with vertically aligned bearings, said motor including a shaft mounted for rotation in said bearings, a dust fan carried by the shaft and located in said fan housing, a rotary disk tool located in said casting and having a predetermined portion of its perimeter protruding through and beyond the cut-away portion of said casting, an operating connection between said tool and shaft, dust intake and collecting means associated with the fan and casting, a pair of diametrically opposed handles secured to the upper portion of said motor casing, and a rolling carriage adjustably mounted on the rear portion of the casting and diametrically opposed to the cut-away frontal portion thereof and adapted to tilt the motor, casing and tool for the purposes described.

5. A high speed manually liftable and portable machine of the spinner type comprising a relatively small vertically disposed light weight motor and casing therefor, the motor casing being provided at its lower portion with an annular shell defining a fan housing, a hollow casting secured to and depending from the fan housing and embodying a skirt-like portion whose front is open, said skirt-like portion being enlarged on one side and gradually tapered rearwardly to define a dust intake nozzle, said casting being in open communication with said fan housing, dust collection means connected with the fan housing, said casting and casing being provided with shaft bearings, said motor including a shaft mounted for rotation in said bearings or the lower end of the shaft depending into said casting, a rotary disk tool attached to the lower end of the shaft, an annulus mounted for idling rotation above the tool and provided with a marginal abutment flange located in close proximity to the edge portion of the tool, the annulus and tool protruding through and beyond the open

front portion of said casting, the dust intake nozzle being located on a predetermined side of the tool to facilitate delivery of dust into the nozzle, a pair of diametrically opposed lifting and pressure producing handles attached to the motor casing and located in substantial vertical alignment with the dust intake nozzle, a roller equipped carriage adjustably secured to the rear portion of the casting and diametrically opposed to the open frontal portion of said casting, said carriage being designed to facilitate handling of the machine and to tilt the tool to restrict the area of contact of the protruding portion of said tool.

6. A high speed manually liftable and portable surfacing machine comprising a casing including a self-contained electric motor, a substantially vertical tool shaft mounted for rotation in bearings in said casing and operatively connected with said motor, a disk-like abrading tool operatively attached to the lower end of the shaft and disposed in a plane substantially parallel to the work, means mounted on the casing and adapted for movable contact with the work, said means having a definite fixed position with respect to said casing to incline said shaft with respect to the work and to tilt a predetermined limited portion of the abrading tool into restricted contact with the work, and an annulus mounted for idling rotation on the casing in close proximity to the abrading tool and provided with a marginal abutment flange co-operable with the peripheral portion of the tool, said flanged annulus constituting a revolving surface-protecting guard as well as a friction reducing endless track when said flange is pressed against the adjacent surface.

7. A high speed manually liftable and portable disk surfacing machine of the spinner type comprising a vertically elongated casing embodying a self-contained electric motor, a substantially vertical tool shaft mounted for rotation in bearings in said casing and operatively connected with said motor, a resilient compensating surfacing tool attached to said tool shaft and disposed at approximate right angles to the axis of said shaft and adapted to assume a somewhat parallel position with respect to the surface being treated, a machine tilting swivel roller-equipped truck fixedly attached to the rear lower portion of said casing in a position to permit the rollers to rest on the surface being treated and adapted to angle and press a restricted sector of the diametrically opposite frontal portion of the disk into abrading contact with said surface, said frontal portion of the disk constituting the sole means for supporting the frontal portion of said machine from the surface, and a revoluble guard mounted for idling rotation on the casing and having its marginal portion co-ordinated with the corresponding portion of said disc and adapted to bear against a surface at right angles to said first-named surface.

8. A high speed manually liftable and portable disk surfacing machine of the spinner type comprising a vertically elongated casing embodying a self-contained electric motor, a substantially vertical tool shaft mounted for rotation in bearings in said casing and operatively connected with said motor, a resilient compensating surfacing tool attached to said tool shaft and disposed at approximate right angles to the axis of said shaft and adapted to assume a somewhat parallel position with respect to the surface being treated, a machine tilting swivel roller-equipped truck fixedly attached to the rear lower portion of said casing in a position to permit the rollers to rest on the surface being treated and adapted to angle and press a restricted sector of the frontal portion of the disk into abrading contact with said surface, said frontal portion of the disk constituting the sole means for supporting the frontal portion of said machine on the surface, and a revoluble guard mounted for idling rotation on the casing and having its marginal portion co-ordinated with the corresponding portions of said disk and adapted to bear against a surface at right angles to said first-named surface, and a pair of diametrically opposed carrying and pressure-producing handles attached to opposite sides of the upper portion of said casing in the manner and for the purposes described.

9. A surfacing machine of the class described comprising a casing provided with a motor and formed with an annular shell defining a fan housing, a hollow casting secured to the fan housing and embodying a skirt-like portion whose front is open, said skirt-like portion being enlarged at one side adjacent the surface being treated and tapered rearwardly to define a dust intake nozzle, said casting and nozzle being in open communication with said fan housing, dust collecting means connected with the fan housing and adapted to accommodate a dust-collecting bag, said motor including a shaft extending through said fan housing, a fan on the shaft located in said housing, and a rotary disk surfacing tool operatively connected with the motor shaft and located in said casting and protruding through and beyond the open front portion of the casting in a position to facilitate sweeping of the dust into the nozzle when the tool is in operation.

10. A high speed discoidal type edging machine comprising a portable manually liftable support embodying a power driven tool shaft, a rotary discoidal abrading tool operatively connected with said shaft and adapted to occupy a plane substantially parallel to the floor, means rigidly mounted on the support for movable contact with the surface, said means having a definite position on the rear side of the support diametrically opposite to that portion of the surface being treated, said means serving to elevate the rear end of the support and to tilt the abrading tool so that a restricted area of that portion diametrically opposite to said means retains shaving contact with the surface, and a guard co-operable with the marginal portion of the tool, said guard being adapted to be pressed against the washboard in the manner and for the purposes described.

11. A surface edging device of the class described comprising a portable support, a power shaft mounted for rotation in bearings in said support, a surface conditioning disk operatively connected to said shaft, anti-friction means supported for independent rotation adjacent said surface conditioning disk, said means being arranged above the disk and having its outer marginal portion relatively and freely movable with respect to the edge portion of the disk in a manner to permit said means to be pressed and held firmly against an adjacent right-angularly disposed surface while the disk is maintained in contact with the surface being treated to space the edge of the disk from the first-named surface and to facilitate stabilization and expeditious handling of the disk while it is moved longitudinally of the latter surface and held firmly down against the second-named surface, and a roller equipped truck attached to the rear lower portion of the support and adapted for constant contact with the sur-

face being treated, said truck serving to elevate the rear portion of the support and to simultaneously tilt the disk so that the diametrically opposite frontal portion thereof has fixed limited abrading contact with the surface being treated.

12. A portable hand type rotary disk surface conditioning machine bodily liftable and controllable by the operator comprising a motor, a casing therefor formed with an annular portion constituting a fan housing, a skirt-like part carried by said housing and having a predetermined section of its rim cut away at the frontal side of the machine, a fan mounted in said housing and operatively connected with said motor, a rotary surfacing disk located in said casting and having a predetermined portion of its perimeter protruding through and beyond the cut-away portion of said rim, said disk being operatively connected with said motor, carrying and steering means connected to said motor casing, stabilizing and guiding means rigidly mounted on the casing for movable contact with the surface being treated, said means having a predetermined fixed position on the rear side of the casing diametrically opposite to the projecting perimeter portion of said rotary disk and serving to elevate the adjacent end of said casing, to space the major portion of the disk from the surface and to tilt a restricted area of the front protruding portion into shaving contact with the surface.

13. A portable hand type rotary disk surface conditioning machine bodily liftable and controllable by the operator comprising a motor, a casing therefor formed with an annular portion constituting a fan housing, a skirt-like part carried by said housing and having a predetermined section of its rim cut away at the frontal side of the machine, a fan mounted in said housing and operatively connected with said motor, a rotary surfacing disk located in said casting and having a predetermined portion of its perimeter protruding through and beyond the cut-away portion of said rim, said disk being operatively connected with said motor, a pair of carrying and steering handles connected to said motor casing, stabilizing and steering means rigidly mounted on the casing for movable contact with the surface being treated, said means having a predetermined fixed position on the rear side of the casing diametrically opposite to the projecting perimeter portion of said rotary disk and serving to elevate the adjacent end of said casing, to space the major portion of the disk from the surface and to tilt a restricted area of the front protruding portion into shaving contact with the surface, a dust discharge pipe connected with and extending angularly from the fan housing at a point between the handles, said pipe being adapted to support and deliver dust from the fan housing into an associated dust collecting bag.

14. A light weight high speed discoidal surfacing machine of the portable hand type bodily liftable and controllable by the operator, said machine comprising a support embodying a self-contained motor-driven tool shaft, a rotary disk abrading tool operatively connected with the working end of said shaft and disposed in a plane at right angles to the longitudinal axis of the shaft and adapted to occupy a plane substantially parallel to the surface being treated, machine tilting means attached to the rear lower portion of the support within the vicinity of the surface being treated, said means serving to tilt the disk with respect to the surface so that the major rear and side portions of said disk are spaced from the surface and only a limited sector of the front portion of the disk is forced into abrading contact with the surface, said contacting sector of the disk and said tilting means being disposed substantially opposite to each other and being the only points of the machine in direct movable contact with the surface, said supporting means embodying guard means for the disk, and also embodying a self-contained automatically operable dust collecting means, and handling means attached to the support to facilitate its movement and to aid in steering it.

HARRY L. MYERS.