April 14, 1931. C. N. CARLSON 1,800,884

STORM SASH FASTENER

Filed April 4, 1929

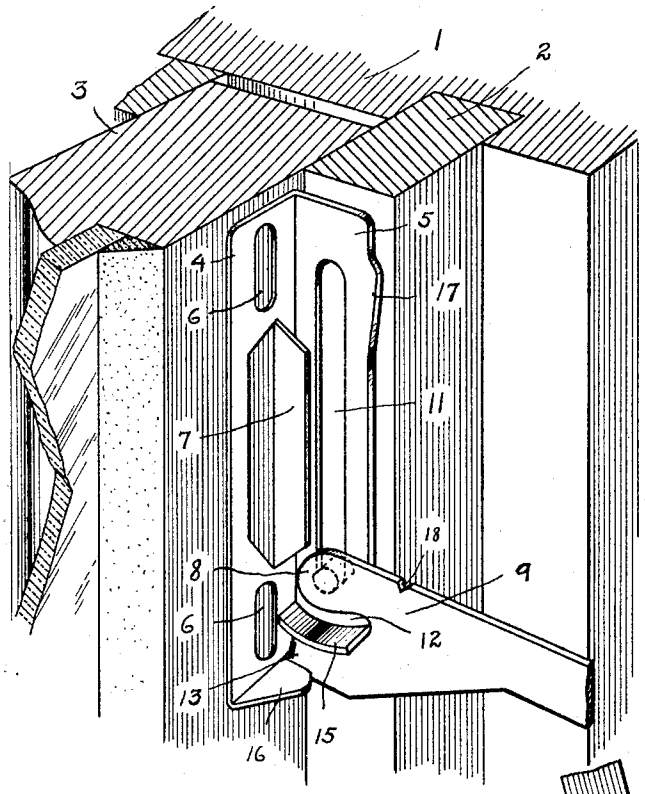

Fig. 1.

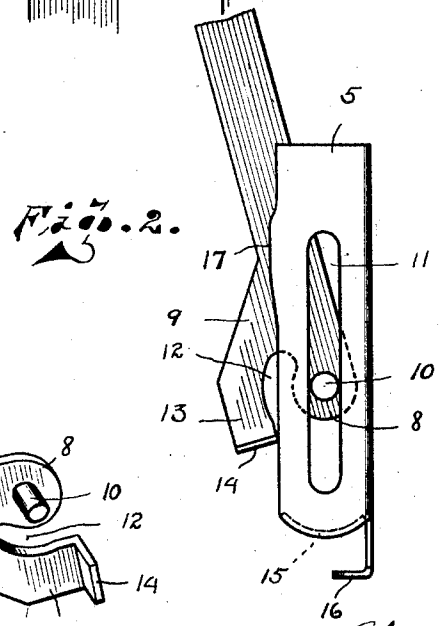

Fig. 2.

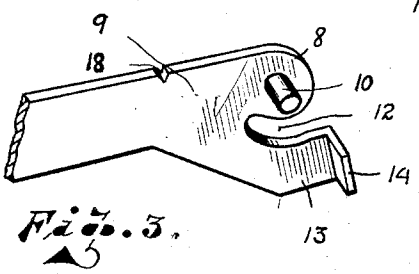

Fig. 3.

Inventor

Chas. N. Carlson.

By Geo. Stevens

Attorney

Patented Apr. 14, 1931 1,800,884

UNITED STATES PATENT OFFICE

CHARLES N. CARLSON, OF VIRGINIA, MINNESOTA, ASSIGNOR TO CHARLES A. JOHNSON, OF VIRGINIA, MINNESOTA

STORM-SASH FASTENER

Application filed April 4, 1929. Serial No. 352,420.

This invention relates to storm sash fasteners and has special reference to a modified form of fastener such as illustrated in my copending application Serial Number 343,717, filed March 1st, 1929, the improvements and novel features differentiating therefrom being more clearly described and pointed out in the following specification and claims.

The principal object of the present invention is to provide a fastener of this character of more simple and economical construction, as well as more durable and stronger than my former device.

Another object is to provide means whereby the storm window is normally locked against movement while the window sash proper is fully closed, or even partially so within the limits of the vertical movement thereof without automatically opening the storm sash.

Still another object is to provide means whereby when the window sash proper to which the storm sash is attached is fully closed the biasing of the storm sash in its closed position is materially augmented.

Other objects and advantages of the invention will appear in the following description thereof.

Referring now to the accompanying drawing, forming part of this application, and wherein like reference characters indicate like parts:

Figure 1 is a perspective view of a fragmental portion of a storm sash and window frame illustrating their open cooperative relation with the improved fastener attached.

Figure 2 is an elevation of the fastener bracket as viewed axially towards the pivot of the sash arm when applied thereto.

Figure 3 is a perspective view of the bracket engaging end of the fastener arm.

1 represents a portion of the side of a window frame, the parting strip being shown at 2, and in Figure 1 the lowermost sash of the window is illustrated at 3. 4 and 5 represent the right angularly disposed walls of the angle bracket which is attached to the outer face of the sash 3 as by suitable screws not shown through the elongated slots 6 in the wall 4 of the angle bracket. Intermediate of these elongated slots is struck from the wall 4 the flange like wall 7 extending outwardly parallel with the wall 5 and spaced therefrom a suitable distance to allow free vertical reciprocation between them of the semi-circularly shaped terminus 8 of the innermost end 9 of the sash fastener arm; it not being considered necessary to show more of the fastener arm for the description of my present invention, it being well understood that the outer end thereof is pivotally attached to the storm sash. On the innermost terminus 8 of the sash arm is securely fixed the pintle 10 which acts as a pivotal support for the innermost end of the arm and is operable vertically within the elongated slot 11 formed substantially the entire length of the wall 5 of the angle bracket.

An arcuate throat like cutout portion 12 is formed in the end of the arm, bifurcating same, and providing the rectangularly shaped terminus 13, the end of which is turned at right angles to the body portion forming the lip 14 extending parallel with the pintle 10; and, for engagement within the throat 12, the lower extremity of the wall 5 is bent at right angles thereto and arcuate in shape forming the shoe like lip 15, the functioning of which is similar to the pintle 21 in my above identified copending application, though as is obvious having the advantage of a much greater area with the lower wall of the throat 12.

Upon the lower extremity of the wall 4 of the angle bracket is formed the lip 16 which is shorter than the full width of the wall 4 providing a receptive space for the terminus 13 of the bracket arm, and this terminus as before stated being formed with the lip 14 will abut directly against the lower inner corner face of the wall 4 of the angle bracket when the arm is in its substantially parallel position as shown in Figure 1 of the drawings, and which position limits the opening of the window and storm sash. However it is obvious that when the window sash 3 is lowered and the storm sash moves to closed position the outer end of the arm will move towards a position parallel with the walls of

the angle bracket and thus disengage the throat 12 from the arcuate lip 15 of the bracket, simultaneously bringing the lip 14 on the terminus 13 of the arm out for engagement with the extreme outer edge of the wall 5, and there being no interim between the time of such engagement and its leaving the lip 15 the inner end of the arm may at this point be readily disconnected by movement thereof axially of the pintle 10, and which point is designated for convenience of observation by the notch 18 in the back of the arm.

As the closing operation of the windows is continued with the members assembled as shown, it is apparent that the inner end of the arm quickly passes that point at which it may be disconnected, as the semi-circular end 8 enters the channel intermediate of the flange 7 and wall 5, and as the storm sash comes to closed position the lip 14 on the terminal 13 of the arm will commence vertical movement along the outermost edge of the wall 5 as the window sash is lowered, it of course being possible of lowering beyond this point until the pintle 10 has reached the upper extremity of the slot 11 in the wall 5 without affecting the outer sash until the lip 14 reaches the hump 17 upon said outer edge of the wall 5 when, immediately upon the lip attempting to climb said hump, additional thrust inwardly of the upper end of the arm 9 which is attached to the storm sash occurs as the pintle 10 acts as a fulcrum to the lever-like action of the terminal 13 thus engaging the hump.

Having thus described my invention, what I claim and desire to secure by Letters Patent, is:

1. The combination with a fastener for cooperatively uniting a storm sash with a window sash, of means formed integral with the fastener whereby final closing position of the window sash will lock the storm sash rigidly against movement.

2. The combination with a fastener for cooperatively uniting a storm sash with a window sash including means whereby a predetermined movement of the window sash may occur without moving the storm sash, of means whereby during said predetermined movement of the window sash the storm sash is locked against independent movement.

3. In combination an angle bracket for attachment to a vertically movable window sash, a storm sash fastener arm pivotally and vertically slidably attached to the bracket, an arcuately shaped slot in the end of the arm forming such attachment and an arcuately shaped lip formed on the lower end of the flange of the bracket to which the arm is attached for cooperative engagement with the slot in the arm for the purpose described.

4. The combination with a fastener for cooperatively uniting a storm sash with a window sash including means whereby a predetermined movement of the window sash may occur without moving the storm sash, of means whereby during said predetermined movement of the window sash the storm sash is locked against independent movement to final closed position.

In testimony whereof I affix my signature.

CHARLES N. CARLSON.