P. DE CLAMECY.

FOLDABLE TYPE WRITING MACHINE.

APPLICATION FILED JULY 5, 1917. RENEWED DEC. 31, 1918.

1,311,879.

Patented Aug. 5, 1919.

4 SHEETS—SHEET 1.

Fig. 1.

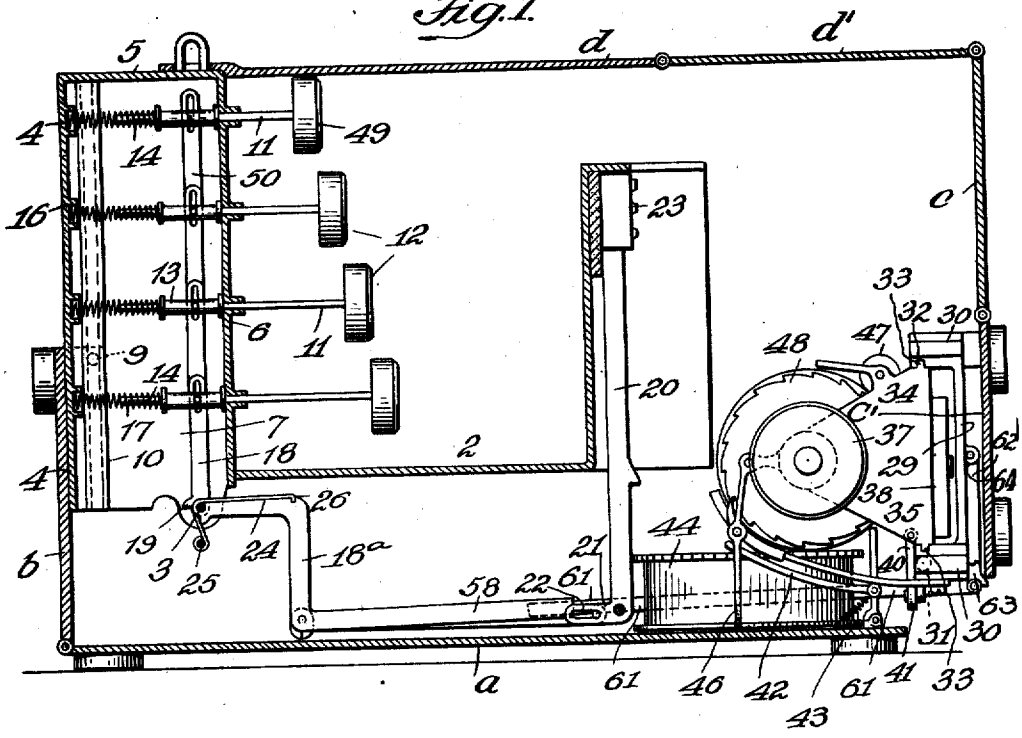

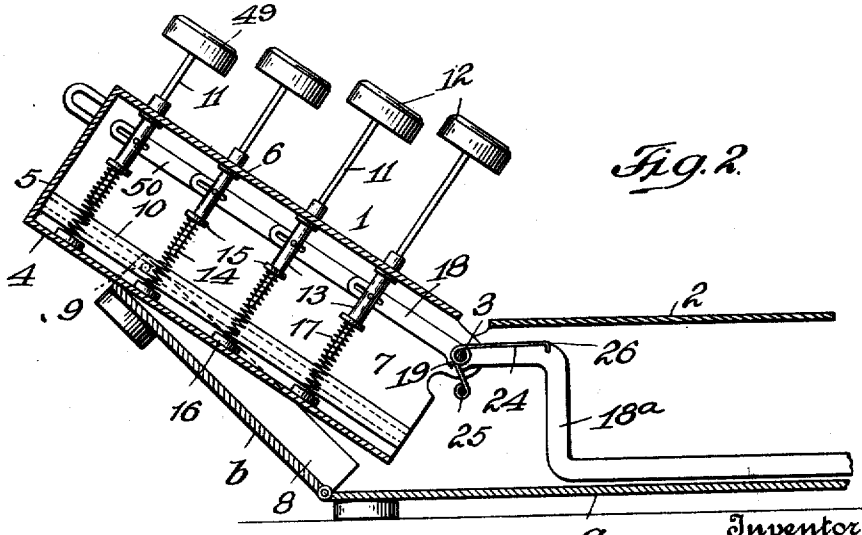

Fig. 2.

Inventor

Philippe de Clamecy

By his Attorneys

Cromwell & Davis

THE COLUMBIA PLANOGRAPH CO., WASHINGTON, D. C.

P. DE CLAMECY.

FOLDABLE TYPE WRITING MACHINE.

APPLICATION FILED JULY 5, 1917. RENEWED DEC. 31, 1918.

1,311,879.

Patented Aug. 5, 1919.

4 SHEETS—SHEET 2.

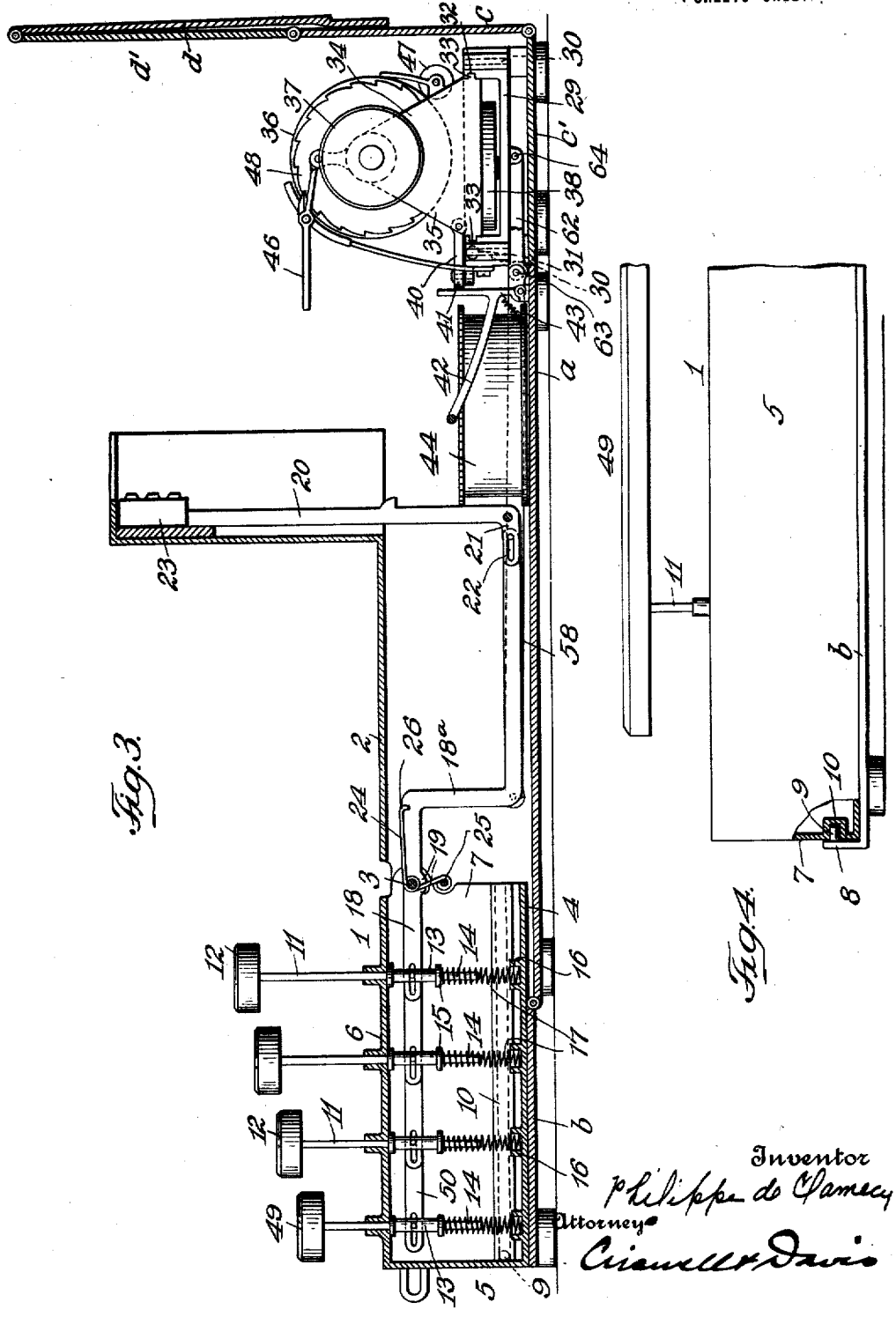

Fig. 3.

Fig. 4.

Inventor
Philippe de Clamecy
Attorney
Cranell & Davis

THE COLUMBIA PLANOGRAPH CO., WASHINGTON, D. C.

P. DE CLAMECY.

FOLDABLE TYPE WRITING MACHINE.

APPLICATION FILED JULY 5, 1917. RENEWED DEC. 31, 1918.

1,311,879.

Patented Aug. 5, 1919.

4 SHEETS—SHEET 3.

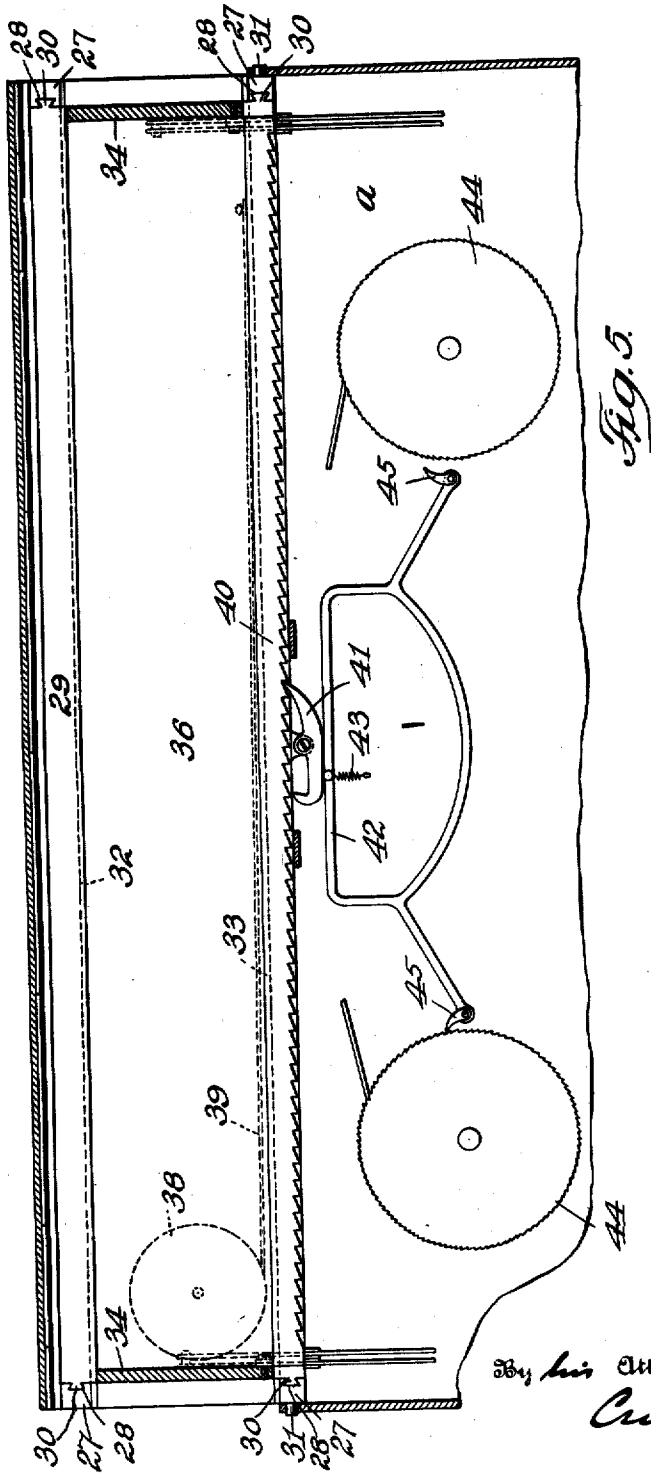

Fig. 5.

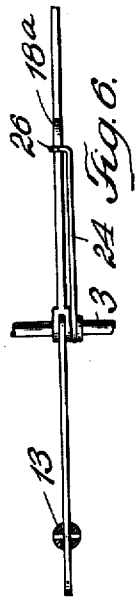

Fig. 6.

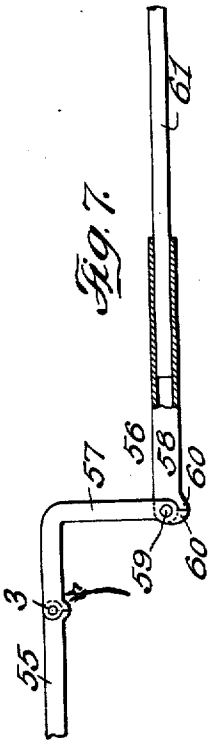

Fig. 7.

Inventor
Philippe de Clamecy
By his Attorneys
Cromwell & Davis

P. DE CLAMECY.

FOLDABLE TYPE WRITING MACHINE.

APPLICATION FILED JULY 5, 1917. RENEWED DEC. 31, 1918.

1,311,879.

Patented Aug. 5, 1919.

4 SHEETS—SHEET 4.

Fig. 8.

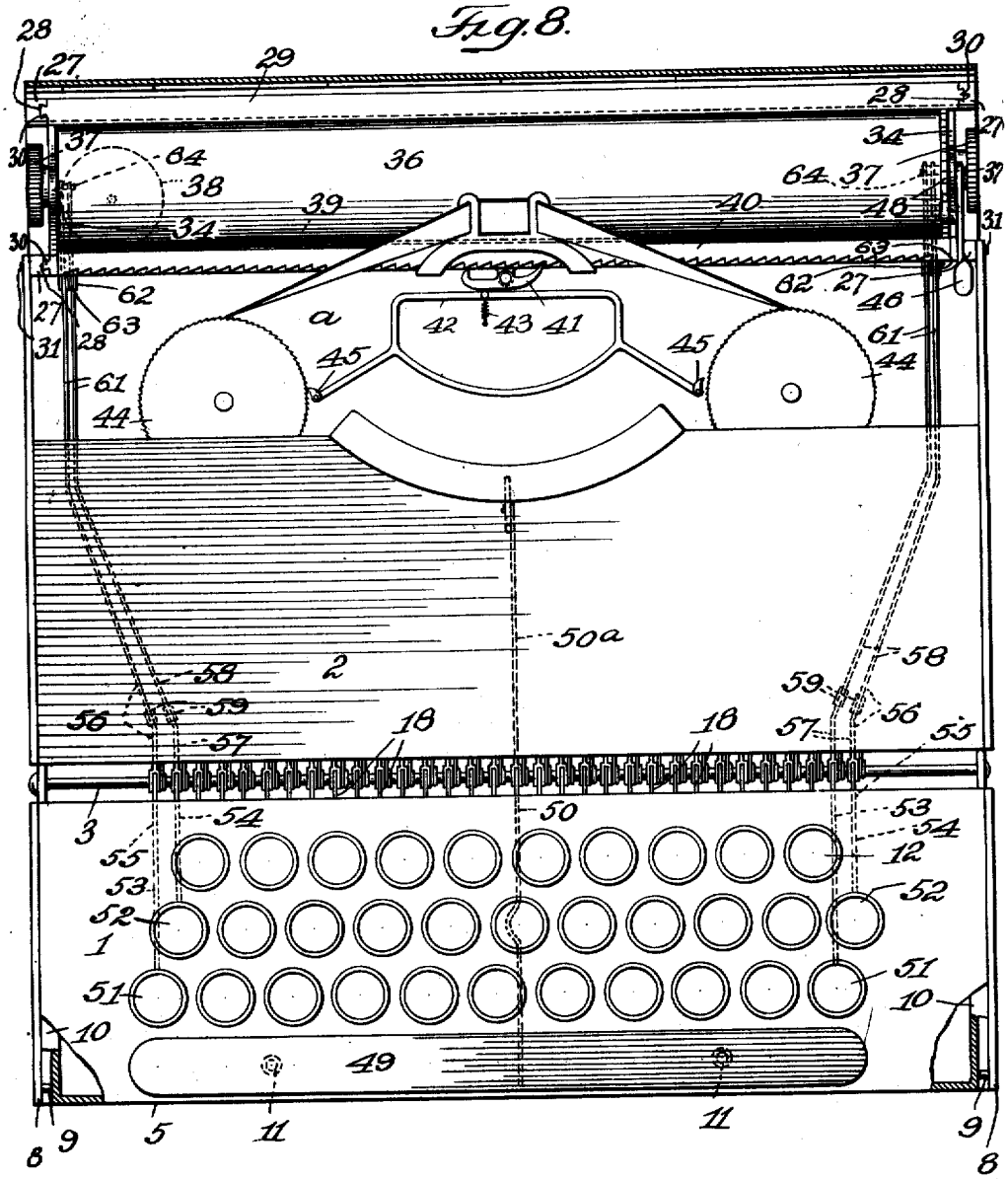

Inventor

Philippe de Clamecy

By his Attorneys

Cromwell & Davis

THE COLUMBIA PLANOGRAPH CO., WASHINGTON, D. C.

UNITED STATES PATENT OFFICE.

PHILIPPE DE CLAMECY, OF CHARLESTOWN, MASSACHUSETTS, ASSIGNOR TO CORONA TYPEWRITER COMPANY, INC., OF GROTON, NEW YORK, A CORPORATION OF NEW YORK.

FOLDABLE TYPE-WRITING MACHINE.

1,311,879. Specification of Letters Patent. Patented Aug. 5, 1919.

Application filed July 5, 1917, Serial No. 178,557. Renewed December 31, 1918. Serial No. 269,170.

To all whom it may concern:

Be it known that I, PHILIPPE DE CLAMECY, a citizen of the United States, and resident of Charlestown, county of Suffolk, and State of Massachusetts, have invented certain new and useful Improvements in Foldable Type-Writing Machines, of which the following is a specification.

One of the principal objects of this invention is to provide a typewriting machine with a keyboard adapted to be bodily folded upwardly and inwardly and to fit within the body part or case of the typewriting machine, the keyboard frame being adapted to form a part of the inclosing case.

Another object of the invention is to provide a foldable typewriting machine in which the keyboard is adapted to fold upwardly and inwardly into the carrying case, the key actuated levers for operating the type bars being mounted upon a common pivot, which pivot also forms the hinge for the keyboard section of the case.

Another object of the invention is to provide a foldable typewriting machine in which the platen carriage is mounted upon a foldable section of the inclosing case, the said section and the platen carriage being arranged to fold upwardly and inwardly into the body part of the machine frame.

Another object of the invention is to provide a foldable typewriting machine having a foldable keyboard section and a foldable platen carriage section, and to provide a type bar action and a platen shift means, all of which remain permanently and operatively connected, whereby the several parts of the machine may be folded for the purpose of making the machine compact without disconnecting any of the operative parts, whereby upon opening or extending the machine to operative position the several key actions will we properly connected for use.

There are other important objects and advantages of the invention which will more fully hereinafter appear, all of them, however, resulting in a typewriting machine adapted to be folded into a compact package for convenience of transportation and storage.

In the drawings, Figure 1 is a longitudinal vertical sectional view of the machine in its folded position, portions thereof being shown in side elevation in order to simplify the drawing;

Fig. 2 a similar view of the keyboard section of the machine in its partly opened or extended position;

Fig. 3 a longitudinal vertical sectional view of the machine open or extended and in operative position;

Fig. 4 a detail front elevation of a portion of the keyboard, showing the space bar;

Fig. 5 a horizontal sectional view of a portion of the machine, showing the platen carriage, parts being shown in plan view in order to simplify the drawing;

Fig. 6 a detail plan view of a portion of one of the type bar levers;

Fig. 7 a detail side elevation, partly in section, of a portion of one of the platen shift levers; and

Fig. 8 a plan view of the machine in its extended or normal operative position.

The machine, when folded, is adapted to be contained within a rectangular box composed of the base section *a*, the front section *b*, the rear section *c* and *c'*, and the top section *d* and *d'*. The front section *b* is hinged to the forward edge of the base section *a*; the part *c* of the rear section is hinged to the upper edge of the part *c'* of said rear section, and the part *d'* of the top section is hinged to the upper edge of the part *c* of the rear section. The two parts of the top section are hinged together as shown in the drawings. The front section is adapted to be folded down into substantially the same horizontal plane as the base section, and to form a portion of the base of the machine when it is open or extended and in operative position. The part *c'* of the rear section is adapted to be folded down into the plane of the base section and to form a part thereof when the machine is in operative position, as shown in Fig. 3 of the drawing. The parts *d* and *d'* of the cover section are adapted to be folded to the rear of the machine as shown in Fig. 3.

For convenience of reference the parts will be described in their normal operative position, as shown in Fig. 3. Mounted on the front section *b* of the machine frame or case is a box-like keyboard frame 1, the said frame being hinged to the main casing 2 by means of a transverse wire or rod 3, said rod passing through the upper rear parts of the side walls of the keyboard frame and into the forward parts of the side walls of the main frame. The keyboard frame is

formed with a bottom plate 4, a front plate 5, a top 6 and the inclosing side walls 7. The side edges of the section *b* of the frame are turned upwardly to form flanges 8, as shown in Fig. 4, and said upturned flanges are provided at their forward ends with inwardly extending pins 9. The side walls 7 of the keyboard frame are formed with longitudinal grooves 10 which extend throughout the length of the keyboard frame so that the said front section has a loose sliding connection with the keyboard frame. This sliding connection is provided in order that the frame section *b* and the keyboard frame may be folded simultaneously rearwardly and upwardly to the position shown in Fig. 1, in which position the bottom plate 4 and the front plate 5 of said keyboard section form portions of the inclosing box or case.

Mounted in the top plate of the keyboard frame are the vertically arranged key bars 11, each of which is provided with a finger piece 12 at its upper end. Within the keyboard section each key bar is provided with a yoke 13 and with a depending stem 14. Surrounding this stem and confined between a collar 15 and a cup 16 on the bottom plate 4, is a spring 17. The type bar levers 18 are all pivoted upon the hinge rod 3 and are of different lengths to enable them to be connected to the key bars of the several banks of keys. Each key bar extends through its yoke 13 and is connected to said yoke by means of a pin-and-slot connection, as shown clearly in the drawings. Each type bar lever is formed in two sections, each of which is pivoted upon the common pivot rod 3, the said lever sections being formed with shoulders 19 which abut together when the keyboard is in its extended operative position, in the manner of the ordinary rule or knuckle joint.

Pivoted in the forward part of the main portion of the machine frame, near the base section *a*, are the type bars 20, each of which is formed at its lower end with forwardly extending arm 21. The rear end of the rear section 18^a of each type bar lever is connected to the arm 21 of its associated type bar by means of the pin-and-slot connection 22. It is manifest that by depressing one of the key bars its connected type bar lever will be swung on the pivot 3, the rear end of said lever moving upwardly and thereby swinging the type bar on its pivot. Each type bar carries a type head 23 and said head is provided with a plurality of printing characters, as shown. To return the type bars and type bar levers to their normal position a spring 24 is provided for each lever. This spring is coiled about the pivot rod 3, one end being anchored to a rigid rod 25 while the other end is permanently secured to the rear member 18^a of the type bar lever, as shown clearly at 26. It is manifest that the keyboard section may be folded upwardly and rearwardly to the position shown in Fig. 1, without disconnecting the two parts of the type bar levers and without in any way disarranging or modifying the positions of the springs which serve to return the parts of the key action to their normal at-rest position upon the completion of the printing movement.

The section *c'* of the inclosing casing is provided with four upwardly extending posts 27 near the four corners thereof. Each of these posts, on its inner face, is formed with a vertical dovetail groove 28. The carriage bed 29 is provided at its ends with vertical dovetail tongues or ribs 30 which are adapted to fit within the dovetail grooves in the posts 27. On the innermost posts 27, near the upper ends thereof, are formed outwardly extending pivots 31 which pass through the side walls of the inclosing case or box, said pivots forming the means for connecting the section *c'* of the case to the main body portion thereof. By means of this arrangement of pivots the platen carriage and the section *c'* of the inclosing case may be folded upwardly and forwardly to the position shown in Fig. 1. When the machine is in its open extended position the section *c'* of the inclosing case abuts squarely against the rear edge of the base section *a*, as shown clearly in Fig. 3.

The carriage bed is formed with longitudinally extending grooves 32 which are adapted to receive longitudinally extending guide ribs 33 formed on the platen carriage 34. The platen carriage may be of any suitable form, and, as shown in the drawing, it is provided with the upwardly extending end frames 35 in which the platen 36 is journaled. The platen shaft is provided with the usual hand knobs 37. Mounted on the carriage bed is a spring drum 38, the carriage driving cord 39 being connected to the carriage, as shown clearly in Fig. 5. The carriage is provided with a forwardly extending carriage rack 40 which is adapted to be engaged by an escapement pawl 41, the said pawl being operated through the universal bar 42. This bar is mounted on the base section *a* and is extended up into the path of the type bars, the spring 43 returning said universal bar to its normal position after each printing or spacing movement.

Ribbon spools 44 are suitably mounted in the main frame, and said spools are operated by means of pawls 45 carried by the universal bar. Mounted on the carriage is a suitable line-spacing lever 46 and paper-feed rolls 47. The line-space lever is provided with a pawl adapted to engage the teeth of a ratchet wheel 48 secured to the end of the platen.

Mounted in the forward part of the keyboard frame is a space key 49, said key being mounted upon key bars similar in construction to the type key bars; and the space key lever 50 is pivoted upon the hinge rod 3. This space-key lever is formed with a rearwardly extending section 50^a which is also pivoted upon the hinge rod 3, the two parts of the space-key lever being formed with shoulders similar to the shoulders 19 on the type bar levers. The rear ends of the space-key levers are pivotally connected to a universal bar operating lever which is pivoted coincident with the type bar pivots and is similar to a type bar, except that it is not provided with a type head. Said universal bar operating lever will be swung rearwardly and downwardly upon the depression of the space key and will engage the universal bar 42 in precisely the same manner as a type bar.

Mounted at each side of the keyboard are two shift keys 51 and 52 which are connected to shift levers 53 and 54 in precisely the same manner that the key bars are connected to the type bar levers. The shift levers are composed of a front section 55 and a rear section 56, said sections being pivoted on the hinge rod 3 and provided with shoulders similar to the shoulders 19 of the type bar levers. The rear section 56 is composed of two members 57 and 58 hinged together at 59 and provided with shoulders 60 which abut together to form a rule or knuckle joint. The part 58 of the shift lever is tubular, and sliding therein is a rearwardly extending bar 61 whose rear end is connected to a link 62 by a knuckle joint 63, the rear end of link 62 being pivotally connected to the carriage bed at 64. The shift levers 53 and 54 are of different lengths in order to move the carriage bed vertically different distances for the usual case shift action. It is manifest that by depressing either of the shift keys the carriage bed and the parts carried thereby will be elevated, the carriage bed sliding vertically on the posts 27.

By constructing the shift levers as described, the carriage bed may be folded upwardly and rearwardly to the position shown in Fig. 1, without disconnecting said levers from said bed. The rear section of the shift lever is extensible to permit of the upward swinging movement of the carriage bed, as shown clearly in Fig. 1.

Any suitable form of escapement means may be employed and said escapement means may be operated by any desired form and arrangement of universal bar. It is also manifest that the ribbon operating mechanism may be varied and that any suitable form of line spacing means and paper-feed rolls may be employed.

What I claim is:

1. A typewriting machine comprising a main frame section, type bars mounted therein, a keyboard frame adapted to be swung upwardly and rearwardly into the main frame section, keys mounted on said keyboard frame, a carriage bed, a pivoted case or frame section supporting said carriage bed, a carriage mounted on said bed, said pivoted frame section being arranged to swing upwardly and forwardly to place the platen carriage within the main frame section, and means for connecting the keys to the type bars.

2. A typewriting machine comprising a main frame section, type bars pivoted therein, an upwardly and rearwardly swinging keyboard frame, keys mounted in said keyboard frame, type bar levers connected to said keys and to the type bars, a common pivot rod for all of said type bar levers, said pivot rod forming the pivotal connection between the keyboard frame and the main frame, a platen carriage, and means for supporting said carriage to permit it to swing upwardly and forwardly into the main frame section.

3. In a typewriting machine, the combination of a stationary base frame part, type bars mounted thereon, a keyboard support pivotally held at its rear end to the forward end of said base frame part, keys mounted on the keyboard support and foldable upwardly and rearwardly therewith from a normal horizontal position to a vertical position in front of the type bars, two-part key-actuated levers operatively connecting the keys and the type bars and each having its parts connected by a rule joint at its fulcrum point, and a common fulcrum rod for said levers extending transversely of the machine in alinement with the point of fold of the keyboard support.

4. In a typewriting machine, the combination of a stationary base frame part, type bars mounted thereon, a keyboard support pivotally held at its rear end to the forward end of said base frame part, keys mounted on the keyboard support and foldable upwardly and rearwardly therewith from a normal horizontal position to a vertical position in front of the type bars, two-part key-actuated levers operatively connecting the keys and the type bars and each having its parts connected by a rule joint at its fulcrum point, a common fulcrum rod for said levers extending transversely of the machine in alinement with the point of fold of the keyboard support, a platen, and an upwardly and forwardly foldable support for the platen pivotally held adjacent its forward edge to the rear end of the base frame part.

5. A typewriting machine comprising a main frame section, type bars mounted therein, a keyboard frame, means for pivoting said keyboard frame in the main frame section to permit it to be swung upwardly

and rearwardly to a compact vertical position in front of the type bars, two-part type bar levers, the two parts of each of said levers being pivoted on and connected together by a pivot rod coaxial with the pivots of the keyboard frame.

6. A typewriting machine comprising a main frame section, type bars therein, a foldable keyboard section, keys mounted in said section, key levers connecting the type bars to the said keys, said key levers being constructed and arranged to maintain the keys and the type bars operatively connected together in the folded and unfolded positions of the keyboard, a platen carriage, and means for supporting said carriage to permit it to be folded upwardly and forwardly into the main frame section.

7. A typewriting machine comprising a main frame section, a keyboard section foldable upwardly and rearwardly into the main section, a platen carriage, and means permitting said carriage to be folded upwardly and forwardly into the main frame section.

8. A typewriting machine comprising three sections pivotally connected together, the two outer sections being adapted to be folded upwardly and inwardly into the main section, one of said outer sections carrying the keys and their associated parts, and the other foldable section carrying the platen carriage and its associated parts.

9. A typewriting machine comprising a main box-like section, type bars mounted therein, a box-like keyboard section pivoted to the main section, keys mounted therein, articulated means connecting the keys to the type bars, a foldable box section, and a platen carriage mounted thereon and adapted to be folded upwardly and inwardly within the main box-like section to make the machine compact.

10. A typewriting machine comprising a main section, a pivoted keyboard section, a pivoted platen carriage section, a vertically movable platen carriage mounted on said platen carriage section, shift keys mounted in the keyboard section, and articulated means connecting the shift keys to the platen carriage and adapted to be operatively connected to the platen carriage during the folded and unfolded positions of both the keyboard section and the platen carriage section.

11. A typewriting machine comprising a main section, a universal bar mounted in said main section, a foldable platen carriage section, a platen carriage thereon, means operated by the universal bar to permit said platen carriage to move for letter and word spacing, a foldable keyboard section, a space key in said section, and articulated means connected to said space key and adapted to operate the universal bar.

12. In a compactible typewriting machine, the combination of a stationary base frame part, type bars mounted thereon, a foldable keyboard support, keys mounted on said support to fold upwardly and rearwardly therewith to a compact position in front of and closer to the type bars, a platen carriage, escapement mechanism, a support for the carriage and its escapement mechanism foldable upwardly and forwardly toward the type bars, ribbon spools mounted on the base frame part, a universal bar mounted on the base frame part, and means operated by the universal bar for actuating the ribbon spools and escapement mechanism.

13. A typewriting machine comprising a main box section, type bars mounted therein, a pivoted front section, a pivoted keyboard frame slidably connected to said front section and adapted to form a part of the front of the inclosing casing when the front section is folded upwardly to reduce the dimensions of the machine, a platen, and means for supporting said platen.

14. A typewriting machine comprising a main section, a keyboard section, and a platen carriage section, said keyboard and carriage sections being pivotally mounted in substantially the same horizontal plane and adapted to be folded upwardly and inwardly to compact the machine and place the keyboard and the platen within the main section.

15. In a compactible typewriting machine, the combination of a base frame part, type bars mounted thereon, a key action for actuating the type bars, a universal bar mounted on said base frame part, a platen carriage, a support for said carriage pivotally held adjacent its forward edge to the rear end of said base frame part and foldable upwardly and forwardly to place the carriage on edge in rear of and closer to the type bars, and escapement mechanism for the carriage operable by the universal bar and mounted on said support to fold therewith relatively to the universal bar.

16. In a compactible typewriting machine, the combination of a base frame part, type bars mounted thereon, a key action for actuating the type bars, a universal bar mounted on said base frame part, a platen carriage, a support for said carriage pivotally held adjacent its forward edge to the rear end of said base frame part and foldable upwardly and forwardly to place the carriage on edge in rear of and closer to the type bars, escapement mechanism for the carriage operable by the universal bar and mounted on said support to fold therewith relatively to the universal bar, and ribbon spools mounted on the base frame part adapted to be rotated through the instrumentality of the universal bar.

17. In a compactible typewriting machine,

the combination of a stationary base frame part, type bars mounted thereon, a key action for operating the type bars, a platen carriage support, connections between said support and said base frame part whereby said support may be moved from its normal position forwardly to a more compact position in closer relation with the type bars, a carriage bed mounted on said support to fold therewith and to move vertically relatively thereto, a platen carriage adapted to travel along said bed, a shift key, and a foldable constantly maintained mechanical connection between said shift key and said carriage bed for imparting a vertical case shift movement to the bed.

18. In a compactible typewriting machine, the combination of a stationary base frame part, upwardly extending type bars pivotally supported at their lower ends on said base frame part, key-operated levers for moving the type bars rearwardly to the printing point, a foldable support, a carriage bed mounted on said support and foldable therewith upwardly and forwardly to a compact position in rear of and close to the type bars, a platen carriage supported on said bed, a shift key, and a foldable constantly maintained mechanical connection between said bed and the shift key for imparting a vertical case shift movement to the bed relatively to said support.

19. In a compactible typewriting machine, the combination of a stationary base frame part, upwardly extending type bars pivotally supported at their lower ends on said base frame part, keys, and foldable connections between the keys and type bars whereby the keys may be moved from their normal operative forwardly extended horizontal positions upwardly and rearwardly to inoperative vertical positions in front of and closer to the upwardly extending type bars.

20. In a compactible typewriting machine, the combination of a stationary base frame part, upwardly extending type bars pivotally supported at their lower ends on said base frame part, a platen, a foldable support for the platen, connections between said support and the base frame part whereby the platen may be moved from a normal rearwardly extended position forwardly to an inoperative position in rear of and closer to the type bars, and a key action for operating the type bars.

21. In a compactible typewriting machine, the combination of a stationary base frame part, upwardly extending type bars pivotally supported at their lower ends on said base frame part, a platen, a foldable support for the platen, connections between said support and the base frame part whereby the platen may be moved from a normal rearwardly extended position forwardly to an inoperative position in rear of and closer to the type bars, keys, and foldable connections between the keys and type bars whereby the keys may be moved from their normal operative forwardly extended positions upwardly and rearwardly to inoperative positions in front of and closer to the type bars.

22. In a compactible typewriting machine, the combination of a stationary base frame part, type bars pivotally supported at their lower ends on said base frame part and normally extending substantially vertically upwardly from said base frame part, a keyboard frame held to said base frame part to fold upwardly and rearwardly from its normal horizontal position to a vertical position in front of and closer to the type bars, keys foldable with said keyboard frame and operatively connected to operate the type bars, a platen, and a support for the platen held to said base frame part and foldable upwardly and forwardly from a normal horizontal position to a vertical position in rear of and closer to the type bars.

23. In a compactible typewriting machine, the combination of a base, a series of normally vertically disposed type bars supported on the base, a keyboard, a platen, and means whereby said keyboard and platen may be moved toward each other from their normal extended operative positions to more compact inoperative positions respectively at the front and rear of said type bars.

24. In a compactible typewriting machine, the combination of a stationary base, a series of upwardly extending type bars pivotally held at their lower ends to said base and movable rearwardly and downwardly to the printing point, keys operatively connected to actuate the type bars and foldable upwardly and rearwardly to compact positions in front of the type bars, a platen, and a normally horizontal support for the platen pivotally connected adjacent its front edge to the base and foldable upwardly and forwardly to place the platen in a compact inoperative position at the rear of the type bars and in close relation therewith.

25. In a compactible typewriting machine, the combination of a casing having a stationary bottom plate and side plates rigidly held thereto, plates hinged to the front and rear edges of said bottom plate and normally lying in the same plane therewith, a box-like keyboard frame pivoted at its rear end to the side plates and slidably interlocked with the free end of the hinged front plate, keys supported on the keyboard frame to fold therewith to a vertical position at the front of the casing, type bars supported on the stationary bottom plate, a platen supported on the hinged rear plate and foldable upwardly and forwardly therewith between the side plates, a cover section comprising a plurality of relatively foldable plates connected with

the rear edge of the hinged rear plate, and means for securing the free end of said cover section to the keyboard frame when the machine is compacted.

26. In a compactible typewriting machine, the combination of a stationary base, type bars mounted thereon, a support pivotally held at its rear end to said base and foldable upwardly and rearwardly relatively thereto, keys, vertically reciprocable stems supporting said keys and mounted on said support to fold therewith, two-part levers each having its parts connected by a rule joint at its fulcrum point, a common fulcrum rod for said levers in alinement with the point of fold of said support, a pivotal connection between the rear end of each lever and its associated type bar, and a pivotal connection between the forward end of each lever and its associated vertically reciprocable key stem.

27. In a compactible typewriting machine, the combination of a stationary base, upwardly extending type bars pivotally supported at their lower ends on said base, a keyboard support pivotally held at its rear end to said base to fold upwardly and rearwardly from a normal horizontal position to a vertical position in front of the type bars, key-supporting stems reciprocably mounted in the keyboard support to move up and down relatively thereto and to fold with said support, horizontally disposed two-part levers connected at their rear ends with the type bars and each having its parts connected by a rule joint at its fulcrum point, a common fulcrum rod for said levers extending transversely of the machine in alinement with the point of fold of the keyboard support, and pin-and-slot connections between the forward ends of said levers and the key-supporting stems.

28. In a compactible typewriting machine, the combination of a stationary base, upwardly extending type bars pivotally supported at their lower ends on said base, a transverse pivot rod supported on the base in front of the type bars, a keyboard frame pivotally held at its rear end to said rod to fold upwardly and rearwardly to a vertical position in front of the type bars, key-supporting stems mounted in said frame to fold therewith and to reciprocate vertically therein and formed with vertically extending slots, horizontally disposed two-part levers connected at their rear ends with the type-bars and having their forward ends extending through the slots in said key stems and formed with horizontally extending slots, and pins held to said key stems and passing through the slots in said levers, each of said levers being fulcrumed on said pivot rod and having its parts connected by a rule joint at its fulcrum.

This specification signed this twenty second day of June A. D. 1917.

PHILIPPE DE CLAMECY.

Copies of this patent may be obtained for five cents each, by addressing the "Commissioner of Patents, Washington, D. C."