United States Patent [19]

Smith

[11] **3,791,555**

[45] **Feb. 12, 1974**

[54] **TRACK ESCAPEMENT AND COUNTER**

[76] Inventor: **Floyd E. Smith,** 5704 Brewster, Erie, Pa. 16505

[22] Filed: **May 1, 1972**

[21] Appl. No.: **248,854**

[52] **U.S. Cl.** **221/298**

[51] **Int. Cl.** **B65g 59/06**

[58] **Field of Search** 221/295, 298, 251, 299, 301

[56] **References Cited**

UNITED STATES PATENTS

620,550	2/1899	Nash	221/298
2,603,800	7/1952	Emmer	221/298 X
3,602,403	8/1971	Klem	221/298

Primary Examiner—Stanley H. Tollberg
Attorney, Agent, or Firm—Dominik, Knechtel, Goduka & Demeur

[57] **ABSTRACT**

A track escapement and counter including a track for the delivery of oriented parts having an open end from which the parts are discharged. A leaf spring suspended escapement is secured to a side wall of the track and cantileverly secured thereto. An arrest assembly is provided actuated transversely of the track and includes holding and release members. Upon actuating the power source the holding and release members engage a preselected part having a preselected number ahead of it and continues its motion to engage an actuating pad portion of the cantilever spring thereby moving the escapement which is at the end of the spring to open the end of the track and permit those parts ahead of the part retained by the arrest assembly to drop off the track. Thereafter the arrest assembly is returned to its normal position in timed relation to the prior repositioning of the escapement so that upon each cycle a predetermined number of parts are discharged from the track.

9 Claims, 10 Drawing Figures

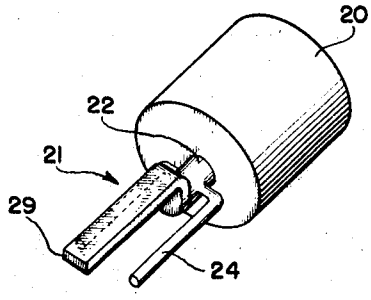

FIG.2

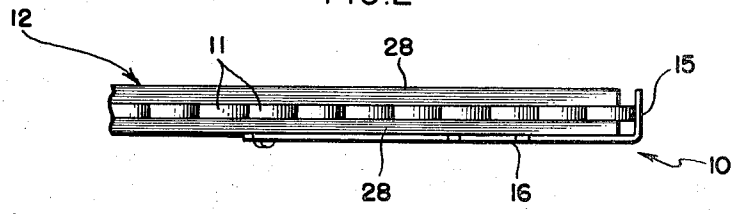

FIG.1

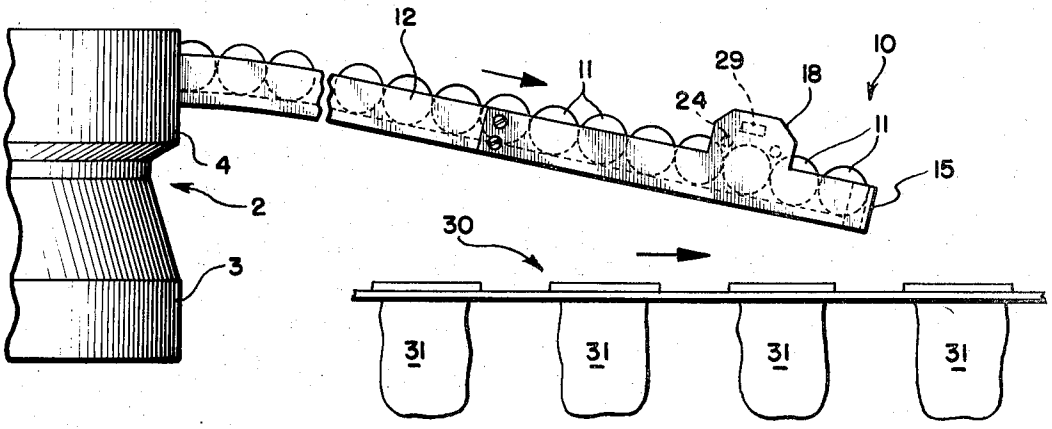

FIG.3

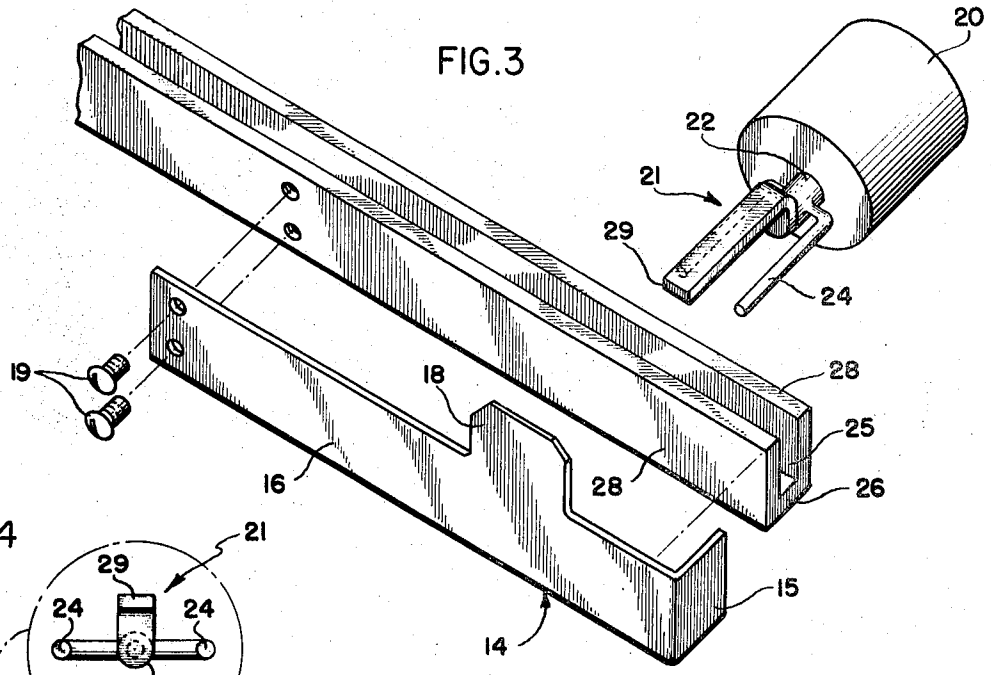

FIG.4

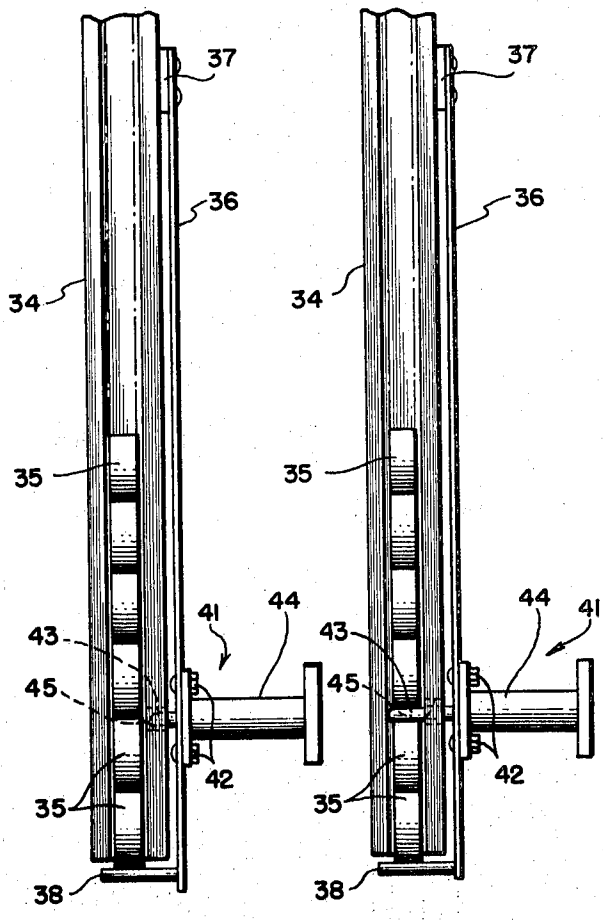

FIG.5

FIG.6

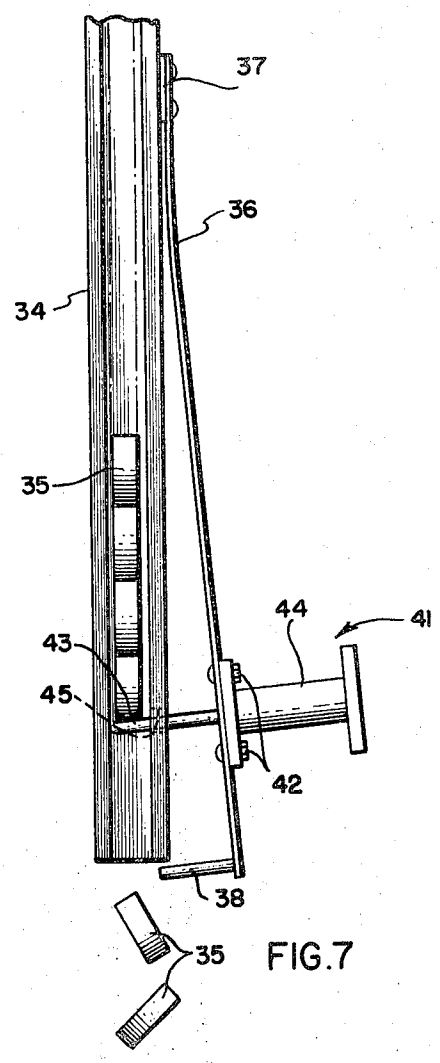

FIG.7

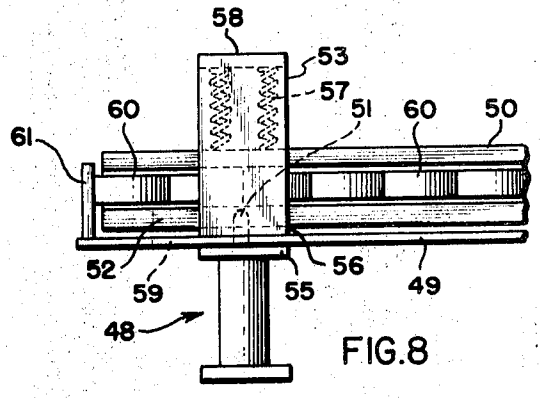

FIG.8

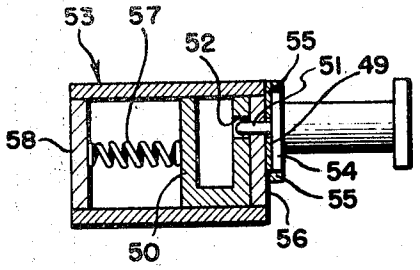

FIG. 10

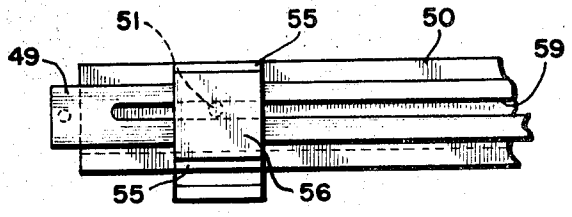

FIG.9

TRACK ESCAPEMENT AND COUNTER

The present invention relates to a track escapement and counter of the character ideally adapted for the feeding of small parts which are oriented in a track. Such tracks are quite commonly associated with vibratory, centrifeed, and tumble type feeders. The escapement and counter operates by blocking a part which is a predetermined number of parts ahead of those at the end of the track, and thereafter opening the escapement to permit those predetermined number of parts ahead of the blocked part to drop off the track.

FIELD OF INVENTION

As indicated above, the field of invention relates primarily to the feeding of parts which are susceptible of orientation such as washers, bolts, spacers, bushings, and the like. Vibratory feeders of the type shown in U.S. Pat. Nos. 2,609,914 and 2,464,216 are well known which deliver the parts to a track which confines them for discharge in an oriented fashion. Most such tracks are inclined downwardly, and many are independently vibrated so that parts flow smoothly. The tracks may be fed by other feeders of the centrifeed type as well as tumble type, or may actually be delivered to the track from a production processing machine performing a preliminary processing step on the part.

DESCRIPTION OF THE PRIOR ART

As indicated above, the prior art generally contemplate feeders of all sorts and a track from which they are dropped. Counting of parts on such a track may be accomplished by a rotary escapement such as shown in patent application Ser. No. 843,672 filed July 22, 1969 now abandoned. Other counters include electric eye devices coacting with a solenoid to open and close escapements, and pick-off devices which measure the number of parts. Traditionally many parts are counted merely by weighing the same. All of these hitherto known mechanisms for counting, particularly where involving electronic sensing means, are subject to failure due to dirt, contamination, deficiencies in current, and the like, which are not readily detectable. The rotary type counter such as referred to in patent application Ser. No. 843,672 above is highly desirable where small parts such as screws are involved, and a discreet length of the same on a track will vary substantially. Where parts such as washers, or bolts are involved and the tolerances are such that a given number of oriented parts will be confined linearly within a predetermined space, the present invention finds its utility since one part is employed as the blocking member, and while it is blocked, the blocking mechanism opens the escapement and permits those parts ahead of it to drop out in a counted fashion for packaging or further processing steps which rely upon an accurate count. Since the mechanism is entirely mechanical, it is highly reliable in operation.

OBJECTS OF INVENTION

In view of the foregoing it becomes apparent that the principal object of the present invention is to provide a track escapement and counter which is inexpensive, simple in operation, and accurate and reliable for the counting of parts being delivered from a track and in an oriented fashion.

A further object of the present invention looks to the provision of a track escapement and counter which is readily adaptable to various shapes of parts which are susceptible of orientation and delivery from a track irrespective of the type of feeder employed to deliver and orient the parts in the track.

A further object of the invention is to provide a track escapement counter which may easily be modified as to its arrest assembly and cantilever spring to accommodate a wide variety of part shapes, presupposing only that the part, when oriented and aligned in a confined track, falls within specific dimensional limitations in its longitudinal alignment to the end that one part serves to block the upstream parts, and yet predetermine the exact number of downstream parts which will be permitted to escape from the track.

Reliability and economy are essential results of achieving the above objectives.

DESCRIPTION OF DRAWINGS.

Further objects and advantages of the present invention will become apparent as the following description of an illustrative embodiment takes place, as illustrated in the attached drawings, as follows:

FIG. 1 is a front elevation of an illustrative track attached to an associated vibratory feeder.

FIG. 2 is a top elevation in the same scale as FIG. 1 showing the track and the counter escapement mechanism.

FIG. 3 is an exploded perspective view of the track, escapement, and yeildable support member in enlarged scale.

FIG. 4 is an end view of the blocking and release member shown in perspective in FIG. 3.

FIGS. 5–7 are top elevation views of an alternative embodiment, showing succeeding operational features,

FIG. 8 is a partial top elevational view of still another alternative embodiment.

FIG. 9 is a side elevational view of the structure shown in FIG. 8.

FIG. 10 is a sectional view the arrest assembly of FIG. 8, but on a slightly enlarged scale.

DESCRIPTION OF PREFERRED EMBODIMENT

Shown in FIG. 1 is a typical vibratory parts feeder 2 comprising a base feeder drive member 3 and a feeder bowl 4 mounted thereatop. Such a feeder bowl 4 has an inclined track on the interior portion, which is oriented and proportioned to deliver parts to the track escapement and counter assembly 10.

The track escapement and counter assembly 10 presupposes as its basic building block, a track 12 having side walls 28 and a base 26 (see FIG. 3) for the confinement and longitudinal oriented alignment of a plurality of parts 11. The parts 11 may be washers, bolts, bushings, sleeves, or any number of various parts which are rigid, susceptible of alignment, and which in alignment have a given number of parts in a given dimensional limitation. Additionally, it is important that the part be susceptible of blocking, whether by means of a hole in the part which can be intercepted by a rod or other blocking means, or the part may have a regular surface such as a hexagonal nut which can be spanned across the flats by means of a pair of fingers. As illustrated further, an escapement 15 is provided at the far end of the spring suspended escapement 14 which blocks the

open end 25 of the track 12. When the escapement 15 is open, as illustrated in FIG. 1, the parts drop into a bag 31 or other container on the bagger 30 or other packaging device which is passed beneath the end of the track 12 in timed relation to the opening of the escapement 15.

As will be observed particularly in FIG. 2, the parts 11 when in alignment present a given number of parts downstream and adjacent the escapement 15 to the end that by moving a fixed dimension upstream, and securing one part at such fixed dimension upstream, a positive given number of parts exist downstream of the blocked part, and upon opening the escapement 15 the positively counted number of parts can be permitted to drop into the packaging assembly.

Referring now to FIG. 3 in particular, it will be seen that the escapement 15 is secured to a spring body 16, preferably of thin leaf spring construction. An actuating pad 18 may be provided as an extension of the spring body 16, or the body itself may be engaged by the arrest assembly 21 to open the track end 25 by removing the escapement 15. As illustrated the spring body 16 is secured to one of the track sides 28 of the track 12 by means of mounting studs 19, thus securing the spring suspended escapement assembly 14 cantilleverly to the track 12.

As illustrated, the arrest assembly 21 includes as its driving member a solenoid 20 having a shaft 22 extending therefrom. In the particular embodiment shown, a pair of holding and release pins 24 are secured to the shaft 22 of the solenoid 20. The holding and release pins 24 are proportioned and oriented to straddle the part 11 spaced from the end 25 of the track 12 and the escapement 15 by a predetermined number of parts, here shown as two parts. The pad actuator 29 extends upwardly from the shaft 22 and protrudes longitudinally further than the holding and release pins 24. The pad actuator 29, as particularly noted in FIG. 3, is proportioned to engage the actuating pad 18 which is integral with the spring body 16. As the shaft 22 is extended from the solenoid 20, the pad actuator 29 pushes on the pad 18 (or body portion of the spring 16), but only after the holding and release pins 24 have engaged the part 11. As the pad actuator 29 extends further, it moves the leaf spring 16 to the end that the escapement 15 uncovers the end 25 of the track 12. Thus one part is held in position, and the two parts as shown are permitted to drop off the end of the track 12, and as shown in FIG. 1, to drop into the bags 31. Thereafter, at a timing rate predetermined empirically from experiment, the solenoid 20 is deactivated, and the escapement 15 and its associated leaf spring 16 return to their normal position, thereby blocking the end 25 of the track 12. Subsequent to this blocking action, the shaft 22 continues its retraction until the holding and release pins 24 have disengaged from the blocking part 11, and the blocking part 11 as well as the part behind it move forward until they are stopped by the escapement 15. Thereafter the cycle is repeated on a continuously timed basis so long as the feeder in combination with the counter are operated.

It will be observed that the track escapement counter 10 assembly can be moved upstream or downstream on the track thereby varying the number of parts being counted.

It will be appreciated that when parts are being counted which have a hole in the center, such as a washer or a nut, the holding and release pins 24 may be omitted, and holes drilled in the track sides 28 of the track 12 to accommodate a single extended shaft 22. The shaft 22 then pierces the opening in the center of the part 11, such as the hole in a washer, and holds it in place as the end portion of the shaft 22 engages the body of the spring 16 of the spring and suspended escapement assembly 14. Otherwise, the principle of operation is the same as that in which the holding and release pins 24 are employed to engage the part 11. Further, the practice of the invention includes a wide variety of modifications of the holding and release pin 24 assembly to the end that any bridging mechanism which blocks one part and yet permits the actuator 29 extension of the shaft 22 to engage the actuating pad 18 of the leaf spring 16 to operate.

DESCRIPTION OF ALTERNATIVE EMBODIMENTS

An alternative embodiment is shown in the view of FIGS. 5–7 wherein a unitary means are shown for interposition between adjoining parts, and for actuating the escapement. A track 34, having a plurality of oriented parts 35, is similar to the embodiment previously described. A leaf spring body 36 is mounted to a sidewall of the track in a cantilever manner by fastener assembly 37, and such spring has an escapement 38,formed as a prebent end which extends normally to the plane of the spring and across the open end of the track 34. An arrest assembly,shown generally as 41, is mounted to the leaf spring body 36 by nut and bolt assemblies 42. The arrest assembly is shown with a single holding and release pin 43, and the pin is actuated by solenoid body 44. The holding and release pin 43 is adapted to move through a port or passageway 45 in the leaf spring body 36, and through a registered port in the adjoining sidewall of the track 34.

In operation, the single release and arrest pin 43 moves between adjoining parts 35, as indicated in the view of FIG. 6, following actuation of the solenoid body 44. The pin 43 thereby arrests and retains the parts upstream,and separates the two parts downstream so that said parts may be released following continued actuation of the solenoid body and full extension of holding and release pin 43. Such full extension results in release pin 43 pressing or exerting a force against the other sidewall of the track so that continued action results in a reaction which moves solenoid body 44, and the leaf spring 36 mounted thereto, away from the track. Such movement likewise moves escapement 38 from the front end of the track to release the parts downstream of the release pin, as shown in the view of FIG. 7.

Still another alternative embodiment is shown in the views of FIGS. 8–10 wherein features similar to those shown in FIGS. 5–7 are utilized. An arrest assembly shown generally as 48 is mounted in sliding relationship to leaf spring body 49 and to track 50. A single release and holding pin 51 is adapted to block parts as previously described. Such pin will arrest and retain parts upstream thereof, and isolate part or pars downstream for later escape from the track. Whereas the embodiment of FIGS. 5–7 is fixed to release a determined number of parts downstream, the present embodiment may be adjustably positioned along the length of the track to selectively arrest different numbers of upstream parts so that different selected numbers of downstream parts may be isolated for escape.

The adjustably positioned arrest assembly **48** includes a rectangular tube **53** which has an enlarged side-to-side dimension relative to track **50.** The rectangular tube **53** is mounted in fixed relationship to solenoid part **54** by mounting lugs **55** which may be welded or the like to solenoid part **54** and adjoining sidewall **56** of rectangular tube **53.** It will be seen that leaf spring body **49** is caged or captured between solenoid part **54** and sidewall **56** of tube **53.** The enlarged rectangular tube **53** has a chamber in which is housed spring **57,** one final turn whereof abuts a sidewall of the track **50.** The opposed final turn abuts sidewall **58** of the rectangular tube **53.** The spring normally urges sidewall **56** of the rectangular tube **53** against the adjoining sidewall of track **50.** Passageway **52** in the sidewall of track **50** is elongated, as is slot **59** in leaf spring body **49.** Sidewall **56** of the tube includes an opening **59** which is in registry with elongated passageway or slots **52** and **59.** The foregoing registered openings comprise port means for pin **51.**

In operation, the arrest assembly **48** is adjustably positioned along the length of the track to desirably arrest a selected number of parts **60** upstream from a selected number of parts downstream. The holding and release pin **51** separates such upstream and downstream parts by moving between adjoining parts upon actuation of the solenoid body. The holding and release pin **51** becomes fully extended following contact of the pin with a sidewall of the track opposite to the sidewall with elongated slot **52.** Continued action causes the arrest assembly and the caged leaf spring to move away from the track so that escapement **61** is moved from the end of the track to allow the downstream parts to escape from the track. After the downstream parts escape from the track, the solenoid body is deactivated, the holding and release pin **51** is retracted, and the spring **57** urges rectangular tube **53** back to its original position wherein sidewall **56** abuts adjoining sidewall of track **50.**

Various alternative elements are contemplated as available for possible use in the subject track escapement and counter. For example, the spring **16** may be eliminated in favor of a hinged arm which is spring loaded, continuing with the same general operation of the escapement **15.** While a solenoid **20** has been shown as the driving member, it will be appreciated that an air motor, mechanically driven plunger, and the like could be employed. Also to be noted, of course, is that the solenoid body **44** in the alternative embodiment is mounted to a flexible member, operating against a fixed member, the reverse of the position and orientation of the solenoid **20** or driving member for the preferred embodiment.

Although particular embodiments of the invention have been shown and described in full here, there is no intention to thereby limit the invention to the details of such embodiments. On the contrary, the intention is to cover all modifications, alternatives, embodiments, usages and equivalents of a track escapement and counter as fall within the spirit and scope of the invention, specification, and the appended claims.

I claim:

1. For use with a track means for feeding the track, a part blocking and escapement assembly comprising in combination,

a track for confining parts in longitudinal alignment,

an elongate spring escapement member mounted on said track, said spring escapement member having an end gate escapement formed integrally therewith and carried at the end thereof in normal blocking relation with respect to said track,

a transverse movable member associated with said track and including drive means for driving said transverse movable member in a path crossing said track,

said transverse movable member operating to cause relative movement between said track and said end gate escapement when said drive means is actuated thereby to open and close said track respectively,

said transverse movable member further including part blocking means for blocking parts along said track during the escapement cycle of parts disposed downstream thereof, said part blocking means operating simultaneously with said transverse movable member.

2. A part blocking and escapement assembly as set forth in claim **1** above, wherein said part blocking means includes at least one holding and release pin, said transverse movable member having a spring actuating means extending beyond said transverse movable member, and an actuating pad on said elongate spring escapement member proportioned to be actuated by said actuating means after the locking of the part by the holding and release pins.

3. The part blocking and escapement assembly as set forth in claim **1** above, wherein said transverse movable member comprises a single shaft extending from said drive means, and wherein said track further includes port means therein for receiving said shaft,

said port means and shaft being positioned upstream from said end gate escapement for a distance whereby said shaft first blocks the part and thereafter extends to the opposite side of said track and actuates the spring escapement member thereby opening said end gate escapement.

4. The part blocking and escapement assembly as set forth in claim **2** above, wherein said part blocking means includes a pair of holding and release pins extending from said shaft of said drive means for straddling the part thereby to block the same.

5. The part blocking and escapement assembly as set forth in claim **1** above, wherein said part blocking means is mounted on said spring escapement member and including a shaft passing through an opening in said spring escapement member in registry with port means positioned in said track, whereby the action of said shaft against the opposite side of said track results in the movement of said track relative to said spring escapement member, while concomitantly blocking parts disposed upstream therefrom.

6. The part blocking and escapement assembly as set forth in claim **5** above, wherein said part blocking means includes a tubular member mounted on said drive means, said tubular member being slidably positioned about said track, a spring chamber in said tubular member including a spring urging said tubular member against said track, said spring member being flat and being captured in sliding relationship in said tubular member and said drive means, an elongated adjusting slot in said flat spring member, and a registered elongated adjusting slot in the adjoining wall of said track, whereby said part blocking means is slidingly po-

sitionable along said track to selectively block upstream parts and release a predetermined number of downstream parts upon movement of said track.

7. The part blocking and escapement assembly as set forth in claim 3 above, wherein each of the parts positioned in said track are provided with an aperture of said shaft operates to block upstream parts by moving through the aperture in a preselected part.

8. The part blocking and escapement assembly as set forth in claim 3 above, wherein the parts positioned within said track have shapes permitting said shaft to move between adjoining parts thereby to block upstream parts and allow release of a selected number of downstream parts from the track upon movement of the track relative to said spring escapement member.

9. The part blocking and escapement assembly as set forth in claim 1 above, wherein said spring escapement member comprises a flat leaf spring mounted at one end of said track, and said end gate escapement comprises a pre-bent end of said flat leaf spring extending normally to the longitudinal axis of said leaf spring and said drive means comprises a solenoid which operates a shaft forming said transverse movable member, said solenoid being mounted on one of said track and leaf spring, such that when said shaft extends and engages one of said track and leaf spring, said leaf spring and track move relative one to the other to allow escapement of a pre-selected number of downstream parts which are not blocked by the movement of said shaft.

* * * * *