No. 674,904. Patented May 28, 1901.

W. CELLERIER.

ATTACHMENT FOR PIANOS FOR AUTOMATICALLY OPERATING SAME.

(Application filed Sept. 8, 1899. Renewed Apr. 16, 1901.)

(No Model.)

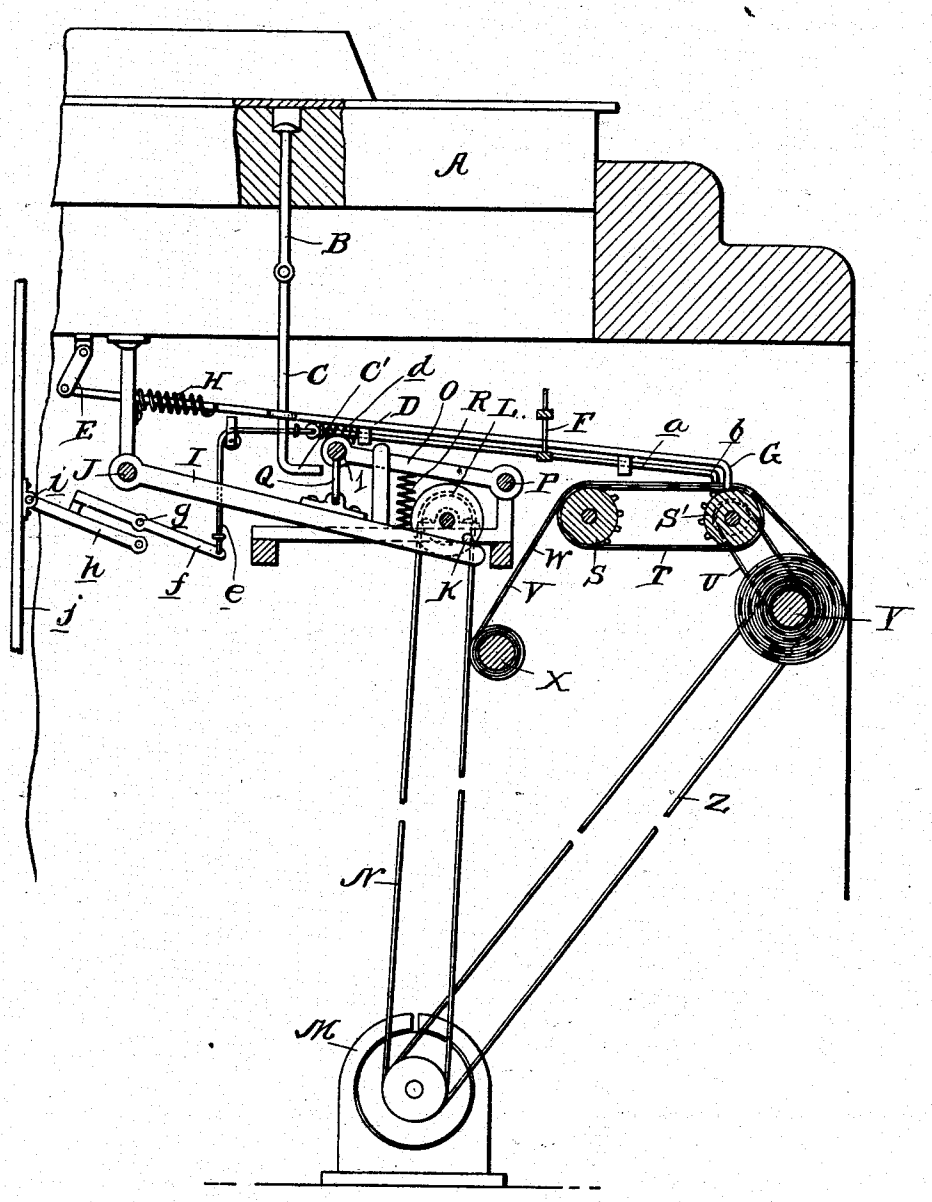

Witnesses
E. C. Purdum
L. H. Morrison

Inventor
William Cellerier
by Geo. Hay Morse
Atty

THE NORRIS PETERS CO., PHOTO-LITHO., WASHINGTON, D.C.C.

UNITED STATES PATENT OFFICE.

WILLIAM CELLERIER, OF PHILADELPHIA, PENNSYLVANIA.

ATTACHMENT FOR PIANOS FOR AUTOMATICALLY OPERATING SAME.

SPECIFICATION forming part of Letters Patent No. 674,904, dated May 28, 1901.

Application filed September 8, 1899. Renewed April 16, 1901. Serial No. 56,028. (No model.)

To all whom it may concern:

Be it known that I, WILLIAM CELLERIER, a citizen of the United States, residing at Philadelphia, in the county of Philadelphia and State of Pennsylvania, have invented a certain new and useful Improvement in Attachments for Pianos for Automatically Operating the Same, of which the following is a specification.

My invention relates to a new and useful improvement in attachments for pianos for automatically operating the same, and has for its object to provide an exceedingly simple and effective mechanism of this description which will automatically perform upon the piano by the use of perforated charts or sheets, which may be changed at will, thus providing for an unlimited variety of music to be produced.

With these ends in view this invention consists in the details of construction and combination of elements hereinafter set forth and then specifically designated by the claims.

In order that those skilled in the art to which this invention appertains may understand how to make and use the same, the construction and operation will now be described in detail, referring to the accompanying drawing, forming a part of this specification, in which a section of the keyboard of a piano is shown and illustrating the manner of attaching my improved mechanism thereto and showing the construction of said mechanism.

In carrying out my invention as here embodied I attach to each key A of the piano a pin B, which has pivoted thereto a finger C. Each of these fingers passes through an eye in the controlling-rod D. Each of the controlling-rods is pivoted at its rear end to a link E and passes forward between the pegs F, its forward end being turned downward to form the hook G, for the purpose hereinafter set forth. A spring H is so attached to the controlling-rod as to retract the rod to the position shown, by which means each finger C is held out of operation.

I is a cam-lever pivoted at J to a suitable hanger, its forward end projecting within the path of travel of the cam-pin K, which projects from the side of the wheel L. This wheel is operated from a suitable motor M by the belt N, so that so long as the motor is in operation the pin will constantly depress the operating-lever and permit it to be drawn upward by the suitable spring mechanism hereinafter set forth.

O is the operating-lever, which is pivoted at P and connected by the link Q to the cam-lever, being normally held in an elevated position by the spring R, and this spring also serves to elevate the cam-lever. The lower ends of the fingers C are bent inward, as indicated at C′, so that when the controlling-rods are traveling forward these bent ends will be drawn under the cross-bar 1 of the operating-lever, and when the latter is moved downward the fingers will also be drawn downward, which will operate the keys A.

S and S′ are sprocket-rolls, over which runs the perforated belt T, the perforations therein meshing with the teeth of the sprocket-rolls, so that when the roll S′ is driven by the belt U both the belt T and the roll S will be caused to revolve therewith.

The music chart or strip V is adapted to pass over the upper surface of the belt, and the perforations W, which are formed therein, register with certain of the perforations of the belt, and when so registering the teeth of the cross-bar of the sprocket-rolls project therethrough, and thus insure the proper feeding of the music-strip. The music-strip is fed from a suitable coil onto the receiving-roll Y, the latter being driven by the belt Z, connected with the motor.

The motor may be of any suitable construction and should be supplied with brake mechanism or a variable-speed arrangement, whereby the proper time may be given to the music-strip, or there may be two or more motors to actuate the various parts of the device so as to change the speed of each relative to the other.

From this description it will been that when one of the holes in the music-strip registers with one of the hooks G of the controlling-rods the latter will drop therein and be engaged and drawn forward against the action of the spring H until disengaged from the perforations by the latter passing around the curvature of the roll S′, and when disengagement takes place the spring H will retract the controlling-rod, as before stated. The forward movement of the controlling-rods will

carry the bent end C′ of the fingers C into engagement with the cross-bar of the operating-lever, which will cause the operation of the corresponding key of the piano, so that it follows that wherever the perforations occur in the music-strip a key of the piano will be sounded, so that it will be only necessary to properly place the perforations in the music-strip to perform any piece of music.

In order that the proper expression may be given to the music performed, an automatic treadle-action is provided for, as follows:

a represents one of a series of rods having the hook *b* upon its forward end and so arranged in suitable guides as to move parallel with the controlling-rods D. A spring *d* holds each of the rods *a* in its retracted position. A cord or flexible wire *e* is attached to the inner end of each of the rods *a* and, passing over suitable guides, is connected with the lever *f*, which forms one of a series, being pivoted at *g*. The rear end of each of these levers bears upon one of the arms *h*, which is pivoted at *i* to the rod *j*, the latter extending downward and being connected with one of the treadles. By this arrangement the hooks *b* when registering with certain perforations in the music-strip V will be drawn forward, and their rods pulling upon the cords *e* will actuate the levers *f* and through them the rods *j*, and consequently the pedals, thus giving the proper expression to the music being rendered, this expression being determined by the location of the particular perforations intended for the actuation of the treadle mechanism.

The springs H and R instead of being in the form of the spiral springs may be flat plate-springs, arranged to perform the same function, and also the springs *d* may likewise be plate-springs.

The motor may be an electric or a spring motor and so regulated as to produce a steady continuous motion, and thereby perform upon the piano in proper time, which time may be regulated either by regulating the speed of the motor or preferably by locating the perforations in the music-strip at the proper distances apart.

No skill is required for the operation of the apparatus, while any selection may be accurately and perfectly rendered.

It will be understood that the operating mechanism may be placed entirely to one side of the piano or in the center thereof, as best suits the fancy of the manufacturer or user, and may be under the control of suitable stop and regulating mechanism, which latter may be within easy reach of an attendant.

For convenience in placing the tune-sheet in position the fingers *b* and G may be elevated simultaneously by any suitable device and held in this elevated position until the tune-sheet has been located, when these fingers may be again lowered into active position.

If desired, a rigid support may be placed above the tune-sheet, so as to prevent the fingers from becoming displaced, and this support may be of cardboard, if desired.

The cost of construction of an apparatus made in accordance with my improvement is small, as there are no complicated or delicate parts to construct or maintain in adjustment.

Having thus fully described my invention, what I claim as new and useful is—

1. In combination with a piano, a series of fingers depending from the keys having bent ends, a series of controlling-rods through which the fingers pass, means for normally holding said rods in their normal position, a traveling music-strip having perforations therein for drawing said controlling-rods forward, an operating-rod under which the bent ends of the fingers are carried by the forward movement of the controlling-rods, and means for constantly moving the operating-rod, as specified.

2. In combination with a piano, a series of pivoted fingers depending from the keys, controlling-rods through which said fingers pass, springs for holding the rods in a rearward position, hooks formed upon the forward end of the rods, a music-strip having perforations therein and adapted to travel so as to bring said perforations in register and engagement with the hooks, an operating-lever, a cam-lever connected with the operating-lever, and a cam-pin arranged to so revolve as to actuate the operating-lever, as specified.

3. In combination with the keys of a piano, a series of fingers depending from said keys having bent ends, an operating-lever adapted to depress said fingers when the bent ends thereof are brought into the path of movement of the operating-lever, a traveling perforated music-strip, means dependent upon the perforations of said strip and the movements thereof to carry the fingers within the path of movement of the operating-lever, a series of rods *a* also having hooked ends for engagement with the perforations of the music-strip, and mechanism for operating the treadles through the movements of the last-named rods, as specified.

In testimony whereof I have hereunto affixed my signature in the presence of two subscribing witnesses.

WILLIAM CELLERIER.

Witnesses:
MARY E. HAMER,
E. H. FORSYTH.