May 10, 1938. E. R. CASNER 2,116,968

PUMP VALVE

Filed Oct. 2, 1935

Fig. 1.

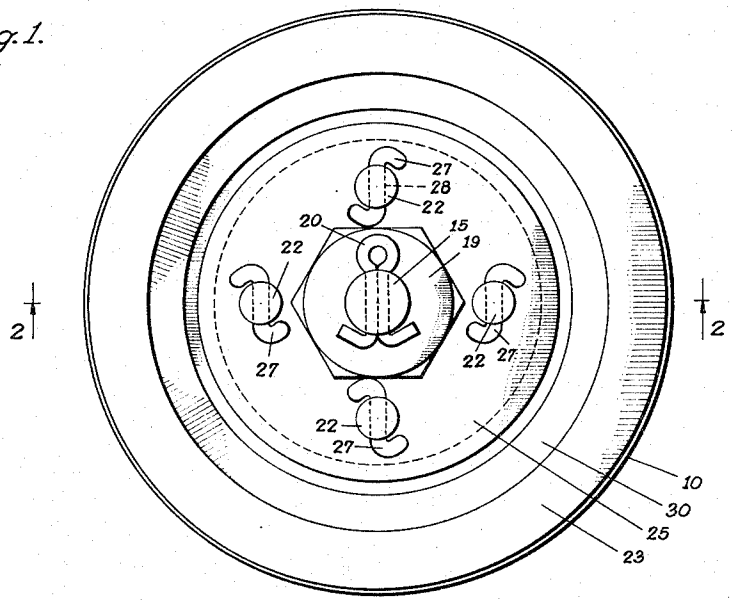

Fig. 2.

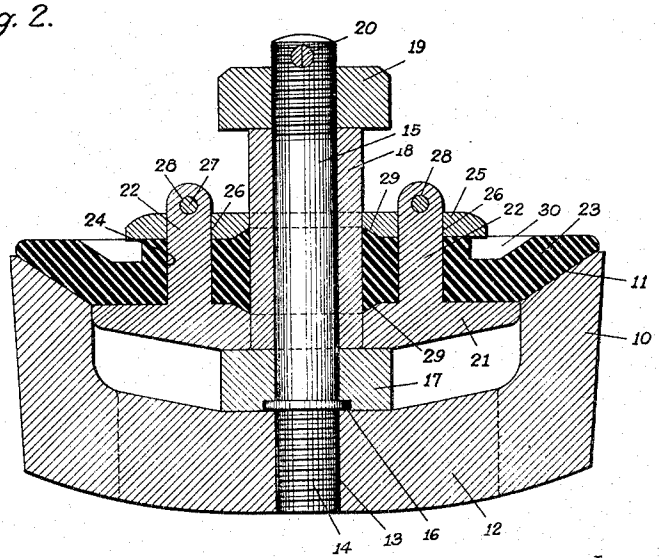

Inventor
E. R. Casner
by Hazard and Miller
Attorneys.

Patented May 10, 1938 2,116,968

UNITED STATES PATENT OFFICE

2,116,968

PUMP VALVE

Earl R. Casner, Whittier, Calif., assignor, by mesne assignments, to Security Engineering Co. Inc., Whittier, Calif., a corporation of California

Application October 2, 1935, Serial No. 43,210

3 Claims. (Cl. 251—127)

My invention relates to improvements in valves and concerns particularly pump valves, such as, for example, mud pump valves.

A primary object of the invention is to provide an improved mud pump valve wherein there is a valve seat with means providing a stem mounted on the valve seat and a relatively lightweight closure slidable on the stem having a rubber disk, the peripheral portion of which is engageable with the seating surface of the valve seat, and having a central or hub portion adapted to be squeezed into sealing engagement with the surfaces of the valve stem on which the closure is slidable when the valve closure is seated. In this way by having a stationary valve stem associated with the seat, the weight of the valve closure can be materially decreased and although wear will take place between the valve closure and the valve stem the rubber disk will be squeezed into sealing engagement with the wearing surfaces of the valve stem providing a leakproof valve when the valve is seated.

Another object of the invention is to provide an improved valve wherein the closure for the valve is slidably mounted for reciprocating movement on a stem mounted on the valve seat. In some types of mud pumps the stem for the valve is mounted for reciprocation in or otherwise mounted on the cap of the pump itself. Consequently, in such type of mud pump should occasion require the substitution of a different type of valve adapters of various kinds are required. In the improved construction where the stem for the valve is mounted on the valve seat rather than associated with the cap of the pump no such adapters are necessary and the valve and its seat are independent of the particular construction of pump in which the valve may be installed.

Another object of the invention is to provide an improved pump valve comprising a seat and a closure, the closure providing a rigid part which forms the primary closure adapted to enter and closely fit within the valve seat. Over this rigid part there is positioned a yieldable rubber disk projecting outwardly beyond the rigid part and adapted to engage the seating surfaces of the valve seat to form a seal.

Still another object of the invention is to provide a valve closure consisting of lower and upper plates between which there is disposed a rubber or like disk, the lower plate being adapted to enter and closely fit the valve seat and the rubber disk being adapted to engage the seating surface of the valve seat to seal, the plates being so connected as to enable the upper plate to move toward the lower plate when the closure is in closing position to compress the disk around the valve stem on which the valve slides, thus sealing against leakage around the valve stem.

Another object of the invention is to provide an improved pump valve of such design that parts subject to the most wear are readily removed and replaced as occasion may require.

With the foregoing and other objects in view, which will be made manifest in the following detailed description, and specifically pointed out in the appended claims, reference is had to the accompanying drawing for an illustrative embodiment of the invention, wherein:

Fig. 1 is a top plan view of the improved valve.

Fig. 2 is a vertical section through the same, taken substantially upon the line 2—2 upon Fig. 1.

Referring to the accompanying drawing, wherein similar reference characters designate similar parts throughout, the improved pump valve comprises a valve seat generally designated at 10, having a seating surface 11. The seating surface is preferably beveled as shown, although this formation of seating surface is not necessary. Integral with the valve seat there is a crossbar 12 through which is drilled a hole 13 that is internally threaded for the reception of the threaded lower end 14 of a stem 15. The stem 15 preferably has a small shoulder 16 formed thereon which on screwing the stem into the crossbar 12 forms an abutment against which the stem is tightened. The bottom of the stem when screwed home is preferably riveted over (not shown) so that the stem is permanently associated with the valve seat. A top or abutment forming bushing 17 fits snugly around the bottom of stem 15 and forms a stop or abutment which is engageable by the valve closure to limit closing movement of the valve. A stem bushing 18 fits closely about the stem on top of the stop bushing 17 and is held in place by means of a nut 19 which can be locked in place by means of a cotter pin 20.

The closure for the valve consists of a lower plate 21 of such size and shape as to enter the valve seat 10 and closely fit its interior. This lower plate forms a rigid part of the valve constituting a primary closure and is adapted to engage the stop bushing 17 to limit closing movement of the closure. The lower plate 21 carries a plurality of upstanding studs 22, preferably four in number, although the number may vary.

A disk 23 formed of rubber or like material

forms a yieldable part of the valve and is positioned over the lower plate 21, the studs 22 extending through suitable apertures 24 formed therein. On top of the disk 23 there is positioned an upper plate 25 which is also apertured as indicated at 26 so that the studs 22 may extend therethrough. Sections of wire rod 27 are passed through apertures 28 in the tops of the studs and act as cotter pins on being bent into S form, as shown in Fig. 1, to hold the parts in assembled relation. This connecting means which holds the parts of the closure assembled is such as to enable the upper plate 25 to move slightly toward the lower plate when the valve is closed and subjected to the pressure in the pump. This movement of the upper plate toward the lower plate under pressure serves to compress the rubber disk 23 particularly around the stem 15, and to squeeze the rubber against the sides of stem bushing 18. Preferably, the opposed faces of the upper and lower plates are beveled as indicated at 29 so as to squeeze the rubber toward the stem bushing. The rubber disk 23 projects outwardly beyond the periphery of the lower plate 21 and is shaped to present a seating surface substantially complementary to seating surface 11. The disk may have its edge rendered quite flexible by being formed with an annular groove 30 although the presence or absence of this groove is ordinarily not material. When the valve is in closed position wherein the lower plate 21 has its downward movement stopped by stop bushing 17 the lower plate forms the primary or principal closure for the valve. Rubber disk 23 engaging seating surface 11 forms the auxiliary closure or seal against leakage around the seating surfaces and also forms a seal around stem bushing 18. In the type of valve shown it is not necessary that the closure for the valve be continually urged by a spring into closed position as the pressure in the pump seats the closure. However, should a spring closed valve be required, a spring for this purpose can be arranged between upper plate 25 and nut 19.

From the above described construction it will be appreciated that the closure is associated with a stem supported by the valve seat and that the entire valve is independent of any adjacent pump construction. As the structure forming the stem remains stationary on the valve seat the weight of the moving part of the valve, to wit: the top and bottom plates and the intermediate rubber disk, is materially reduced. The lower plate preferably does not engage the seating surface of the valve seat but enters the valve seat. I have found that where the support for the rubber disk engages the valve seat with metal to metal contact that there is a tendency to pound out the seating surface of the valve seat, requiring replacement of the valve seat from time to time. The principal wear on the improved valve takes place between the lower plate 21 and the stop bushing 17 and between the plates 21 and 25 and the stem bushing 18. Although wear is present on the sides of the stem bushing 18 the central portion of the rubber disk 23 on being squeezed against the sides of the stem bushing effectively takes up the wear and always maintains a sealing engagement with the stem bushing when the valve is seated. When the wear on the stem and stop bushings has been too severe these parts can easily be removed and replaced.

Various changes may be made in the details of construction without departing from the spirit or scope of the invention as defined by the appended claims.

I claim:

1. A valve comprising means providing a valve seat, means providing a stem on the valve seat, and a closure slidable on the stem comprising upper and lower plates, a rubber disk between the plates, and means for holding the plates and disk in assembled relation but enabling the plates to move slightly toward each other into squeezing engagement with the disk therebetween, said disk having a peripheral portion engageable with the seating surface of the valve seat, and a central portion arranged adjacent the stem so that when the valve is seated the central portion of the disk may be squeezed into sealing engagement with the valve stem, the lower plate being of such size and shape as to enter and closely fit within the valve seat, and means around the base of the stem engageable by the lower plate to limit the closing movement of the closure.

2. A valve comprising means providing a valve seat, a stem on the valve seat, a stop bushing around the base of the stem, and a closure slidable on the stem comprising upper and lower plates, the lower plate being adapted to enter the valve seat and engage the stop bushing, a rubber disk between the plates, and means for holding the plates and disk in assembled relation but enabling the plates to move slightly toward each other into squeezing engagement with the disk therebetween, said disk having a peripheral portion engageable with the seating surface of the valve seat and a central portion arranged adjacent the stem so that when the valve is seated the central portion of the disk may be squeezed into sealing engagement with the stem.

3. A valve comprising means providing a valve seat having a cross bar, a stem secured to the cross bar, a stop bushing around the stem at its base, a stem bushing around the stem above the stop bushing, and a closure slidable on the stem bushing comprising upper and lower plates, the lower plate being engageable with the stop bushing and being of such size and shape as to enter the valve seat, a rubber disk between the plates, and means for holding the plates and disk in assembled relation but enabling the plates to move slightly toward each other into squeezing engagement with the disk therebetween, said disk having a peripheral portion engageable with the seating surface of the valve seat and a central portion arranged adjacent the stem bushing so that when the valve is seated the central portion of the disk may be squeezed into sealing engagement with the stem bushing.

EARL R. CASNER.