July 31, 1956 S. F. BRIGGS 2,757,295

AUTOMATIC ENGINE STARTING CIRCUIT

Filed Feb. 23, 1955 2 Sheets-Sheet 1

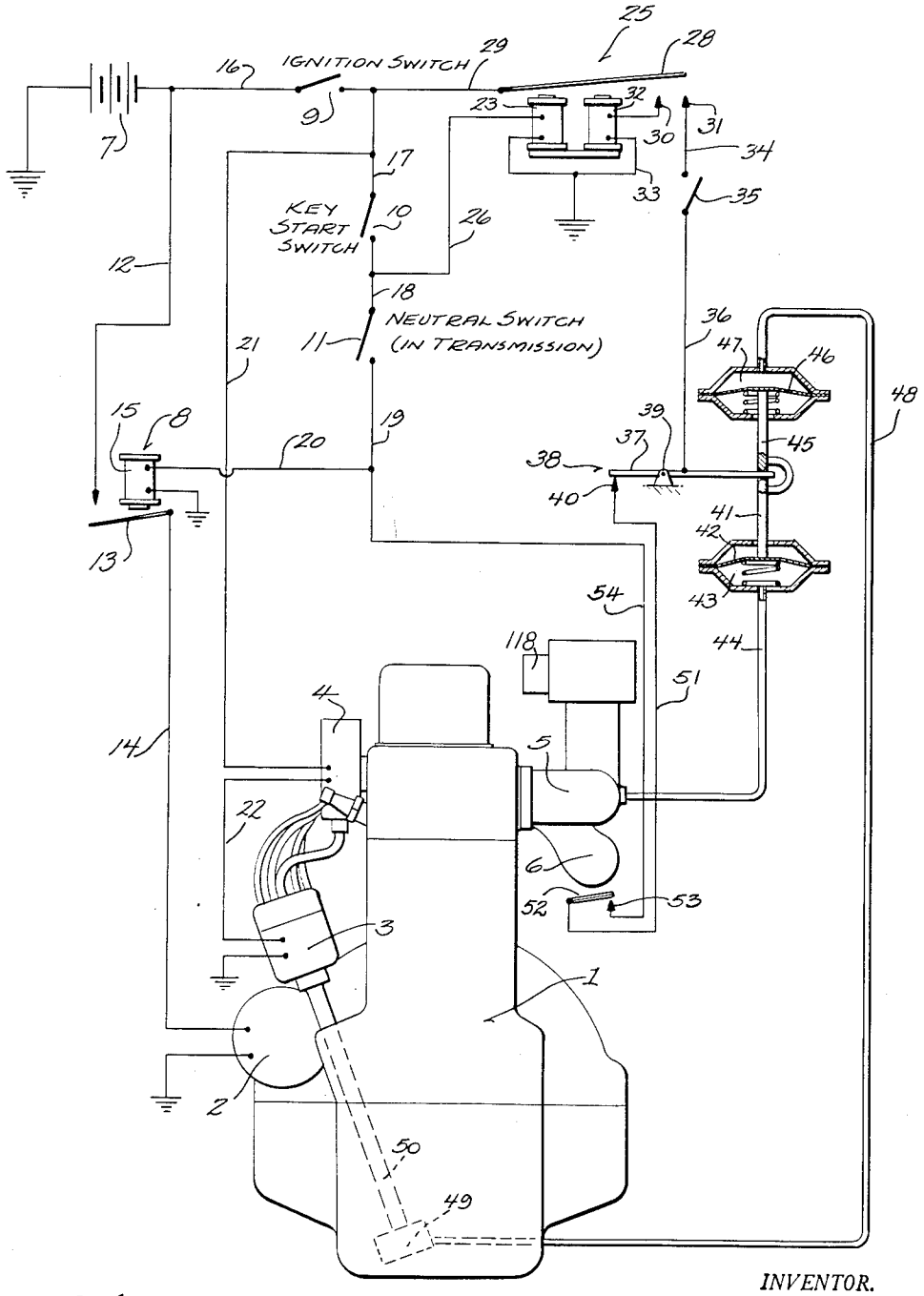

Fig. 1

INVENTOR.
STEPHEN F. BRIGGS
BY
Wheeler, Wheeler & Wheeler
ATTORNEYS

July 31, 1956 S. F. BRIGGS 2,757,295

AUTOMATIC ENGINE STARTING CIRCUIT

Filed Feb. 23, 1955 2 Sheets-Sheet 2

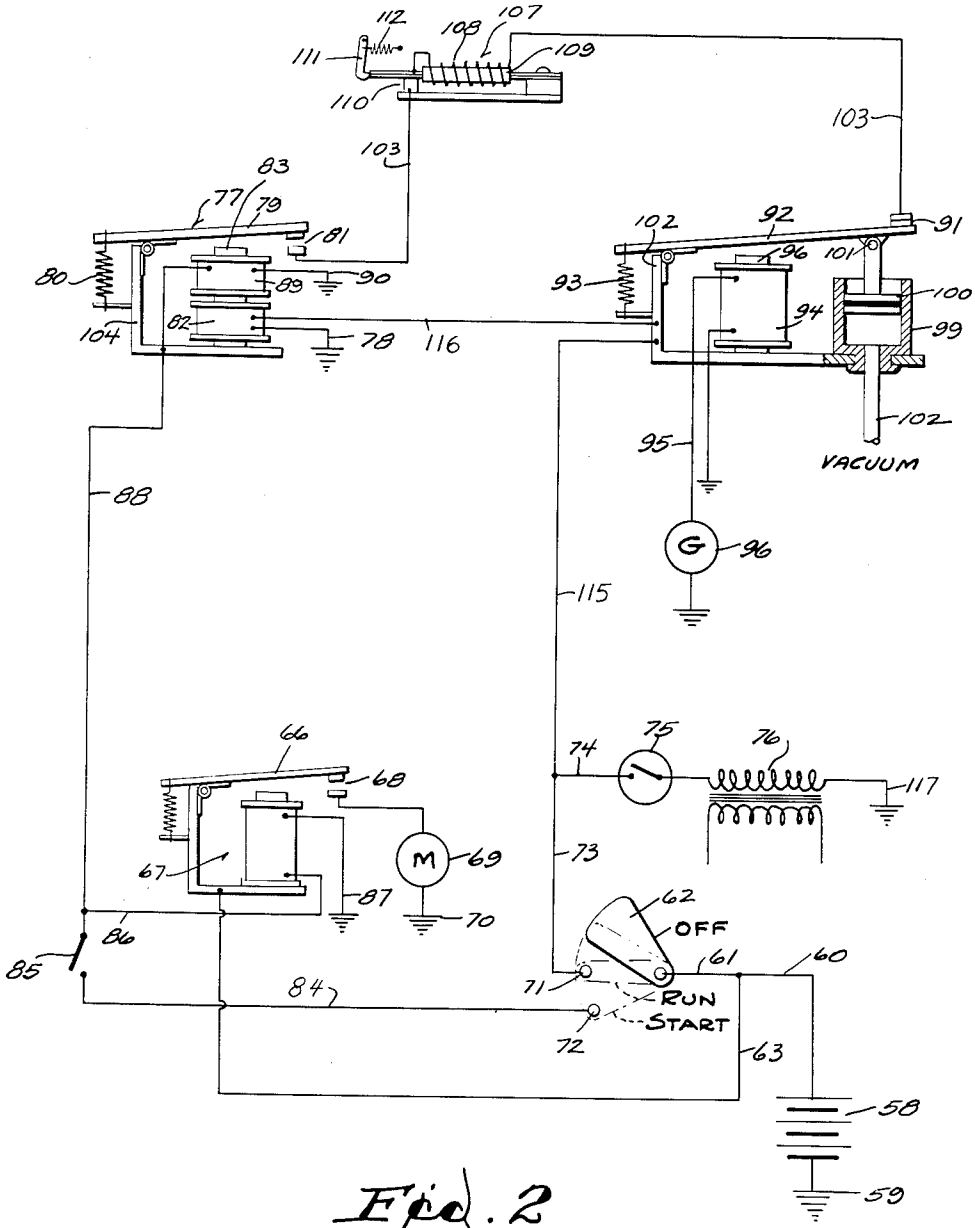

Fig. 2

INVENTOR.
STEPHEN F. BRIGGS
BY
Wheeler, Wheeler & Wheeler
ATTORNEYS

United States Patent Office 2,757,295 Patented July 31, 1956

2,757,295

AUTOMATIC ENGINE STARTING CIRCUIT

Stephen F. Briggs, Naples, Fla.

Application February 23, 1955, Serial No. 489,974

14 Claims. (Cl. 290—38)

This invention relates to automatic engine starting circuits for motor vehicles.

Use of the conventional starting switch to close the starting motor relay is necessary when the engine is first started. Thereafter if the engine fails for any reason, restarting is automatic regardless of the status of the transmission in the driving connections to the wheel.

A holding relay energized in the first start of the engine supplies current to a switch which closes when the engine stops but which is held open under all conditions of engine operation. Desirably two different actuators operate on this one switch. For example, in one embodiment of my invention there may be a diaphragm subject to oil pressure to hold the switch open when the oil pressure is high and another diaphragm subject to intake manifold vacuum to hold the switch open when manifold vacuum is high. There are circumstances under which the oil pressure may fall substantially to zero as when the engine is idling while hot, and there are other circumstances under which the vacuum will fall very low, as when the engine is accelerating under wide open throttle. However, one or the other of these diaphragms will remain effective to hold the switch open whenever the engine is in operation.

In another embodiment of my invention one of the actuators may be an electromagnetic coil energized by the generator. If the engine fails the generator will stop and de-energize the coil. This coil is desirably used in conjunction with a vacuum operated actuator as aforesaid.

Through the holding relay and the engine controlled switch above described, the starting relay is energized at a point in the starting circuit which is beyond the neutral switch normally provided in the transmission, thus providing for re-starting a stalled engine under all circumstances of normal operation.

I may optionally provide a thermostatically controlled switch in series with the engine controlled switch. This may be desirable because of the fact that the neutral switch is shunted by the re-starting circuit. If the engine is subject to the action of any choke, manual or automatic, an excess of fuel is provided while the engine is cold. Accordingly, if a re-start were to be permitted with a cold engine and the neutral switch open (the vehicle being in gear), the excess fuel provided by the choke might result in undesirably rapid vehicle motion.

This application is a continuation in part of my copending application Serial No. 421,505, filed April 7, 1954, and now abandoned.

Fig. 1 is a diagrammatic showing of one circuit embodying my invention.

Fig. 2 is a diagrammatic showing of a modified circuit embodying my invention.

In the embodiment of the invention shown in Fig. 1 the vehicle engine diagrammatically illustrated at **1** has the usual starting motor **2**, distributor **3**, ignition coil **4**, intake manifold **5**, exhaust manifold **6**, battery **7**, starting motor relay **8**, ignition switch **9**, starting switch **10**

and neutral switch **11**. The latter is ordinarily located in the transmission controls and is intended normally to require the transmission to be in neutral as a prerequisite to the operation of the starting motor through relay **8**. The starting switch **10** is frequently combined in one unit with the ignition switch **9** to be operated by an overrunning movement of the starting switch key. Since the switches are in fact separate switches, however, and are not necessarily combined at all, they are separately illustrated in this diagram.

A cable **12** of heavy current carrying capacity leads to the starting motor relay **8**, and subject to control of its armature **13**, is connected by similar cable **14** to the starting motor **2**. The return circuit is through ground, as shown.

The coil **15** of starting motor relay **8** requires for its energization the closing of ignition switch **9**, the closing of the starting switch **10** and the closing of the neutral switch **11**. With all three of these switches closed, current flows through conductors **16**, ignition switch **9**, conductor **17**, starter switch **10**, conductor **18**, neutral switch **11** and conductors **19** and **20** to the starting relay coil **15**, returning through ground. Energizing of the coil **15** attracts the armature **13** to close the starting relay switch and energizes the starting motor to operate the engine. Meantime, ignition current is supplied to the coil **4** and distributor **3** in the usual way through conductor **16**, ignition switch **9**, conductor **21** to the coil and conductor **22** to the distributor, returning through ground.

When the starting switch **10** is closed, the coil **23** of holding relay **25** is energized by conductor **26** from conductor **18**, with a return through ground. This attracts the armature **28** to close circuits through the ignition switch from the battery and through conductor **29** to the stationary contacts **30** and **31**. Contact **31** is connected to coil **32** of the holding relay, which has a return through conductor **33** to ground. Coil **32** will hold relay armature **28** engaged with contacts **30** and **31** as long as the ignition switch **9** remains closed. The relay **25** will open whenever the circuit through the ignition switch **9** is broken. The relay can be re-closed only by operating starter switch **10**.

Closing of the circuit from the battery through armature **28** of holding relay **25** to contact **31** connects contact **31** through conductor **34**, switch **35** and conductor **36** with the moving contactor **37** of a normally closed switch generically designated by reference character **38** which is opened in any desired manner when the engine is in operation. The switch **35** is a control switch which enables the auxiliary automatic starting circuit to be made effective or ineffective at the option of the operator.

Automatic starting is primarily effected through the moving contactor **37**. As illustrated, the switch contactor **37** is a lever pivoted at **39** for movement to and from fixed contact **40**. The lever is connected by link **41** with a diaphragm **42** constituting one wall of diaphragm chamber **43** which communicates through tube **44** with the intake manifold **5**. When pressures in the manifold are substantially sub-atmospheric, the pressure differential to which diaphragm **42** is subject will operate to lower the diaphragm and communicate motion through link **41** to the contactor **37** to move the contactor in a switch opening direction.

Another link at **45** connects the contactor lever **37** with a second diaphragm **46** constituting one wall of chamber **47**. Diaphragm chamber **47** communicates through tube **48** with the engine oil pump **49** which is shown, for the purposes of this disclosure, to be driven by an extension into the crank case of the distributor shaft **50**. The arrangement is such that pressure developed by oil pump **49** during engine operation is communicated through duct **48** to diaphragm chamber **47** to subject diaphragm **46** to

pressure differentials tending to actuate contactor lever 37 of switch 38 in a switch opening direction.

As stated above, there are some conditions of engine operation during which the oil pressure does not constitute a dependable indication of engine operation. There are other conditions in which the degree of vacuum in the intake manifold does not constitute a dependable indication of engine operation. These conditions do not occur concurrently in the oil pressure line and intake manifold. Accordingly, by causing the switch 38 to open whenever there is either substantial oil pressure or substantial vacuum, I provide for the opening of switch 38 whenever the engine is in operation, and for the closing of switch 38 whenever engine operation ceases.

The fixed contact 40 of switches 38 is optionally connected by conductor 51 with a thermostatic switch contactor 52. This may comprise a bimetallic bar exposed to engine heat as, for example, by proximity to the exhaust manifold 6. When the thermostatic switch 52 is heated, it closes a circuit to fixed contact 53 and thence through conductor 54 and conductor 20 to the coil 15 of the starting motor relay 8. This switch 52 may be omitted entirely. It is particularly unnecessary if the engine has no automatic choke.

Assuming that the engine is warm, and that its automatic choke 118 is inoperative, the stopping of the engine 1 will, regardless of the position of the neutral switch, close a circuit through the holding relay switch 25, the auxiliary switch 35, the engine operative switch 38, and the thermostatic switch 52 to the starting relay to close the latter and re-start the engine. As soon as the engine starts, the intake manifold vacuum or the oil pressure, or both, will effect the opening of switch 38 thereby opening the starting motor relay and leaving the engine in normal operation.

A modified embodiment of the invention is shown in Fig. 2. The circuit diagram therein shown omits the engine 1, which may be assumed, but is otherwise comparable to the circuit of Fig. 1. One terminal of the battery 58 is grounded at 59, its other terminal being provided with a line 60 having a branch line 61 connected to the fan-shaped arm 62 of a combined ignition and motor start switch. Line 60 has a second branch line 63 to armature 66 of starting motor relay 67, switch contacts 68, starting motor 69 and ground return 70.

As shown in the drawing the switch blade 62 is in its "off" position. If rotated counterclockwise to its first dotted line position marked "run" it engages ignition circuit contact 71 to complete the ignition circuit through lines 73, 74, engine distributor 75, ignition coil 76 and ground return 117. A circuit is also thereby completed through lines 73, 115, 116, and electromagnetic coil 82 in the holding relay or cut-out switch 77 and ground return 78.

The holding relay or cut-out switch 77 comprises an armature 79 biased by spring 80 to a position in which switch contacts 81 are open. The holding relay further comprises a field core 83 about which the electromagnetic coil 82 is wound. When the armature 79 is in its open position as illustrated, the air gap at 83 is a maximum. The magnetic strength of energized coil 82 is so designed that when the air gap is maximum the bias of spring 80 is not overcome. Accordingly, switch contacts 81 will remain open.

If the fan-shaped combined ignition and motor start switch blade 62 is further rotated counterclockwise to its dotted line position marked "start" it will engage contact 72 (simultaneously with contact 71) and close the circuit from the battery 58 through lines 60, 61, 84, transmission safety switch 85, line 86, starting motor relay 67 and ground return 87. If the transmission safety 85 is open, for example, if the vehicle is in gear, actuation of the manual starting switch 62, 72 will be ineffective to complete the circuit aforesaid and the engine will not start. However, if the engine transmission is in neutral,

switch 85 will be closed and the engine will start as aforesaid. In this circumstance an extended circuit is thereby completed through line 88 to a second electromagnetic coil 89 wound about core 83 of holding relay 77 and ground return 90.

The coils 82 and 89 are wound to be magnetically additive. Since the fan-shaped combined ignition and starting motor switch blade 62 simultaneously engages contacts 71 and 72, both coils 82 and 89 are simultaneously energized. The additive fluxes of both coils across the air gap 83 develop adequate magnetic attraction to overcome the bias of spring 80 and attract armature 79 to close switch contacts 81.

Thereafter the combined ignition and starting motor switch blade 62 may be returned to its "run" dotted line position thus de-energizing coil 89. Coil 82, however, remains energized. Because the armature 79 has moved toward core 83, the air gap between the core and the armature is reduced to the extent that coil 82 alone develops adequate magnetic attraction across the reduced air gap to overcome the bias of spring 80 and maintain switch contacts 81 closed.

The re-starting switch has a set of contacts 91, one of which is mounted on armature 92 which is biased by spring 93 to hold the contacts in normally closed position as shown. However, the armature may be attracted by the electromagnetic coil 94 which is in a circuit 95 with the engine generator 96. As long as the engine runs and turns the generator to energize coil 94 armature 92 will be attracted to the electromagnet core 96 to open switch contacts 91.

I may additionally provide vacuum cylinder 99 and piston 100 having a pivotal connection 101 to the armature 92. The cylinder 99 is subjected to the vacuum of the intake manifold of the engine through the pneumatic line 102. Accordingly, as long as the engine is operating and subjects cylinder 99 to vacuum, piston 100 will be drawn into the cylinder to break switch contact 91. As soon as the engine is manually started in the manner aforesaid, switch contacts 91 are opened and will not re-close until the engine fails, thereby deenergizing the coil 94 and relieving the vacuum in the cylinder 99. Spring 93 will thereupon close switch contacts 91 and an engine re-starting circuit is established from battery 58 through lines 60, 61, switch blade 62, lines 73, 115, the frame 102 of the re-starting switch, its armature 92, closed contacts 91, line 103, cut-out switch 107, closed contacts 81, armature 79, the frame 104 of the holding relay 77, lines 88 and 86, the starting motor relay 67 and ground return 87. The engine will thus re-start and as soon as re-started the switch contacts 91 will open because of the actuation of the armature 92 by generator action and/or intake manifold vacuum.

To preclude undesirable drain of the battery 58 and turning of the starting motor 69, if for some reason the engine is unstartable, for example, for lack of fuel or otherwise, I may provide a conventional cut-out switch 107 in line 103. The cut-out switch may comprise a resistance 108 wound about a bi-metallic element 109. The circuit is completed through switch contacts 110 which are broken on movement of the bi-metallic element when sufficient heat is generated by passage of current through the resistance 108. Cut-out switches of this type are designed to permit passage of current for a predetermined period, for example, approximately one minute before action of the bi-metallic element breaks the circuit. I may also provide a latch 111 biased by spring 112 to snap under the arm of the bi-metallic element when the arm lifts to open the circuit. Accordingly, the cut-out switch 107 will re-close only if manually re-set. In this manner automatic re-closing of cut-out switch 107 is prevented and uncontrolled cycling of the automatic re-start circuit cannot occur.

From the foregoing it is clear that the circuit of Fig. 2 is comparable to the circuit of Fig. 1. in that the engine

will automatically re-start upon engine failure and regardless of the position of the transmission switch **85**. The re-starting circuit is in shunt with the manual starting circuit and both circuits are in series with the switch blade **62**. Moreover, by reason of the provision for dual coils **82, 89** in the holding relay **77**, once the ignition switch is turned to "off" position the holding relay will open under bias of spring **80** and will not again close until both coils are energized. Manual starting is thus required to condition the automatic re-starting circuit for operation.

Various features of the invention shown in the circuits are interchangeable. Any combination of actuators for holding the re-starting switch open until engine failure occurs can be used. Moreover, the several holding relay structures illustrated can be substituted one for the other, suitable modifications being made in the circuits for this purpose.

It is very important to the successful functioning of any automatic starting device to provide, as in the instant circuits, that the re-starting of a stalled engine will be effected regardless of the position of the neutral switch and the transmission. It is quite common for inexperienced drivers to stall automobiles while the vehicle is on a railroad track. But for the circuits herein disclosed, it would be necessary to set the transmission in neutral before the automatic re-starting circuit could function. Because of the circuits disclosed, re-starting will occur instantly when the engine stalls, without requiring any conscious effort on the part of the operator.

Despite the fact that the engine will automatically restart, regardless of the engagement or disengagement of the transmission, I nevertheless retain all the advantages of the neutral switch as a means of requiring that the transmission be disengaged as a prerequisite to manual starting. For this reason, once the ignition switch is opened the holding relay or cut-out switch is opened, thereby opening the re-starting circuit and requiring actuation of the manual start cycle to close the holding relay and condition the circuit for automatic re-starting. Thus the ignition switch is electrically in series with the manual start switch and automatic re-starting switch, the latter two switches being electrically in parallel.

I claim:

1. An engine re-starting circuit for a vehicle engine having a starting motor, an ignition circuit, a battery, a starting relay switch and a power connection from the battery to the starting motor controlled by said starter relay switch, the re-starting circuit comprising in combination an ignition switch connected between the battery and the engine ignition circuit, a starting switch operatively connected in circuit between the battery and the starting motor relay, a transmission switch in series with the starting switch between the starting switch and the starting motor relay, a re-starting circuit including a holding relay switch having energizing means controlled by the starting switch and having a normally open switch contact and a holding means controlled by its own said contact, said relay including a relatively fixed contact engaged by the first mentioned contact in the closed position of the latter and an electrical connection from the said fixed contact to the starting motor relay in parallel with said neutral switch and provided with a normally closed switch having engine operated means for opening it, whereby the closing of said last mentioned switch is dependent upon non-operation of the engine.

2. The device of claim 1 in which the engine comprises means for varying fluid pressure during engine operation, said last mentioned switch including a moving contactor and a movable part connected therewith and responsive to pressure differentials and a chamber with respect to which said part is movable and which is in communication with the pressure varying means to constitute the means for opening said switch during engine operation.

3. The device of claim 1 in which the engine is provided with an air intake system and an oil pressure system and the last mentioned switch comprises a movable contactor, the means for opening said switch during engine operation comprising a pressure chamber with a movable wall connected to said contactor, the interior of the chamber communicating with one of said systems and the exterior of the wall being exposed to atmospheric pressure.

4. An automatic re-starting control for a vehicle engine having a starting motor and a starting motor switch with manually operable control means, said re-starting control comprising a normally closed switch having a re-starting circuit controlled by the normally closed switch in shunt with the switch first mentioned and further including a holding relay having activating means controlled by the switch first mentioned, the normally closed switch having means controlled by the engine for opening the normally closed switch during engine operation.

5. The device of claim 4 in which the means for opening the normally closed switch comprises a pair of opposed diaphragms and diaphragm chambers therefor, the engine having a fluid pressure pump connected with one of said diaphragm chambers and having an intake manifold subject during engine operation to sub-atmospheric pressures and connected with the other of said diaphragm chambers, the diaphragms being movable in response to fluid pressure and sub-atmospheric pressure in the same direction whereby to exert their combined effect in a direction to open the normally closed switch.

6. A means for re-starting a vehicle engine having a driving transmission provided with a neutral switch, said engine further having a starting motor, a starting motor relay switch, a battery, a power connection from the battery subject to the relay switch to the starting motor, an ignition system having an ignition switch in circuit with the battery, and a manually operable starting switch in circuit with said relay for the closing of said starting relay switch, a re-starting circuit including a holding relay having energized means controlled by the manually operable starting switch and having a holding circuit effective on the closing of the relay to retain it closed subject to the re-opening of the ignition switch, a further circuit through the ignition switch controlled by the holding relay and leading to the starting motor relay in shunt with the neutral switch, a normally closed switch in said last circuit and engine operated means for opening the normally closed switch during engine operation.

7. The device of claim 6 in which said last mentioned circuit further includes means for opening the circuit during the period when the choke of said engine is operative, said engine being provided with such a choke.

8. The device of claim 7 in which the last means comprises a thermostatic switch exposed to temperatures developed during a substantial period of engine operation.

9. An automatic re-starting control for a vehicle engine having a starting motor and starting motor circuit including a manual starting switch, said re-starting control comprising a re-starting circuit in shunt with the starting motor circuit, said re-starting circuit including a first switch closed by actuation of the starting motor through the starting motor circuit, and a second switch closed by engine failure whereby to complete the re-starting circuit through said closed first switch, and an ignition switch and circuit including actuating means for said first switch whereby to open said first switch when the ignition switch is open and require completion of the manual starting circuit to re-close said first switch to condition the re-starting circuit for operation.

10. The device of claim 9 in which the actuating means for said first switch includes a relay comprising an electromagnet having an armature and two field coils magnetically coupled in series, one of said coils being in the circuit including the ignition switch and the other coil being in the circuit including the manual starting switch, said electromagnet having an air gap characteristic such

as to preclude actuation of the armature by the field until both coils are energized, the actuation of the armature resulting in air gap reduction whereby the armature will be held by the coil in the ignition switch circuit.

11. The device of claim 9 in which the actuating means for said first switch includes a relay having a first electromagnetic coil in series circuit with the ignition switch and manual starting switch and a second electromagnetic coil in series circuit with the ignition switch and said first switch is in shunt circuit with said manual start switch whereby closing of the manual start switch is a prerequisite to actuation of the first electromagnetic coil to actuate said first switch which thereupon completes a shunt circuit through the second electromagnetic coil, opening of the ignition switch being effective, however, to open both series and shunt circuits to require re-actuation of both the ignition and manual start switches to re-actuate said first switch.

12. An automatic re-starting control for a vehicle engine having a starting motor, a starting motor switch with manually operable control means, an ignition system and an ignition switch, said re-starting control comprising a re-starting switch having a re-starting circuit controlled by the re-starting switch in shunt with the starting motor switch and further comprising a cut-out switch having holding means controlled by said ignition switch and a closing means controlled by the starting motor switch, whereby opening of the ignition switch opens said cut-out and subsequent closing of said ignition switch is ineffective to close said cut-out switch pending closing of the motor starting switch, the re-starting switch having means controlled by the engine for precluding closing of the re-starting switch during engine operation.

13. The device of claim 12 in which said holding means comprises an electromagnetic coil and a circuit for said coil including said ignition switch, said circuit and coil having adequate magnetic strength to hold said cut-out switch once it is closed but having inadequate magnetic strength to close said cut-out switch from its open position.

14. The device of claim 13 in which said closing means comprises a second coil magnetically additive to the coil first mentioned whereby energization of both coils is effective to close said cut-out switch.

References Cited in the file of this patent

UNITED STATES PATENTS

1,444,403	Varley	Feb. 6, 1923
1,607,497	Williams et al.	Nov. 16, 1926
1,903,761	Guettner	Apr. 18, 1933
1,909,415	Maurer	May 16, 1933
1,981,880	Sayre	Nov. 27, 1934
2,067,084	Hartzell	Jan. 5, 1937
2,135,620	Loehr et al.	Nov. 8, 1938
2,352,774	Dermond	July 4, 1944
2,581,737	West	Jan. 8, 1952
2,602,144	Bolles	July 1, 1952
2,654,036	Schneider et al.	Sept. 29, 1953