May 23, 1944. W. A. BECKER 2,349,605

DISPENSING CONTAINER

Filed Jan. 1, 1943 2 Sheets-Sheet 1

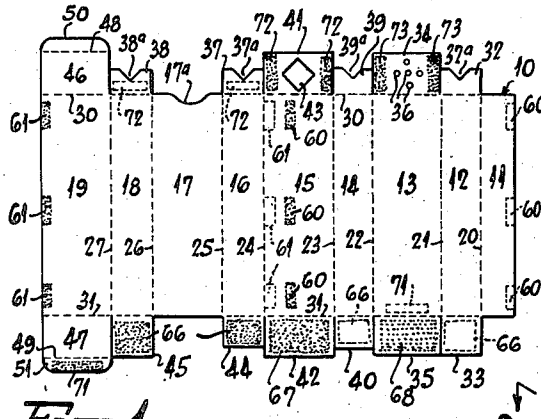

Fig. 1

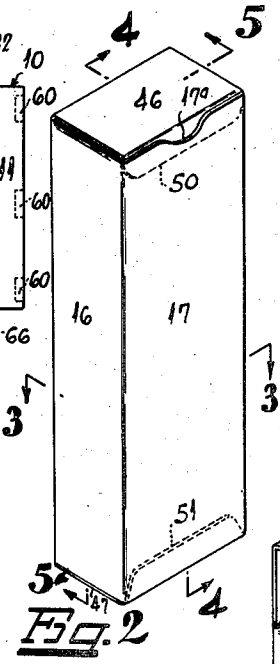

Fig. 2

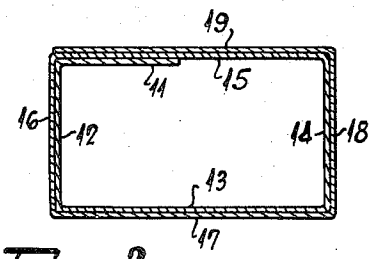

Fig. 3

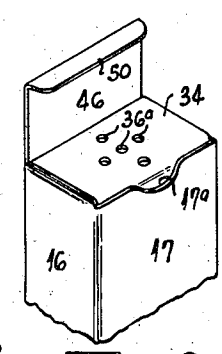

Fig. 6

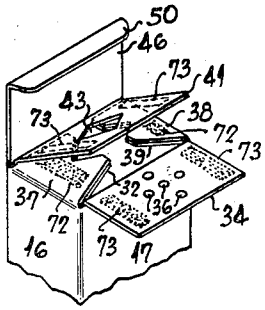

Fig. 7

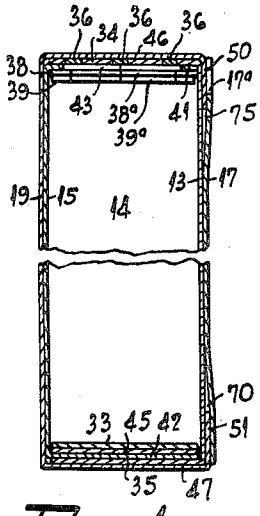

Fig. 4

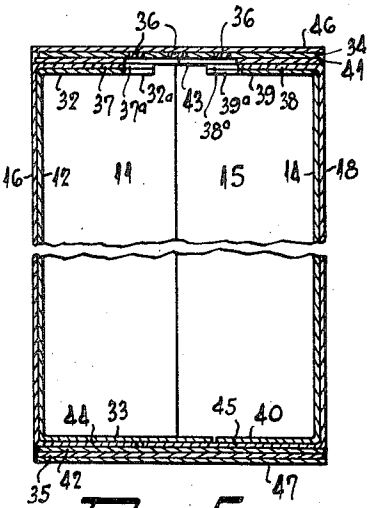

Fig. 5

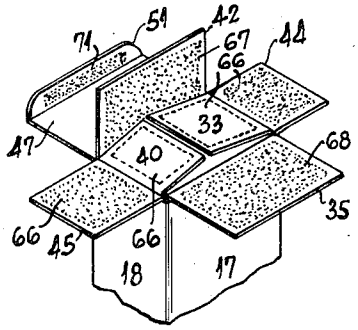

Fig. 8

Inventor:
WALTER A. BECKER

By

Eaton & Brown
Attorneys

May 23, 1944. W. A. BECKER 2,349,605

DISPENSING CONTAINER

Filed Jan. 1, 1943 2 Sheets-Sheet 2

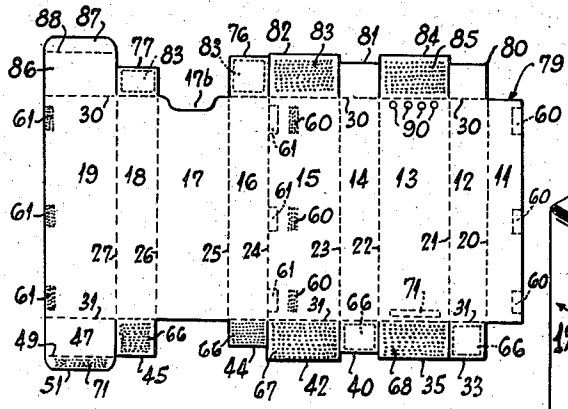

Fig. 9

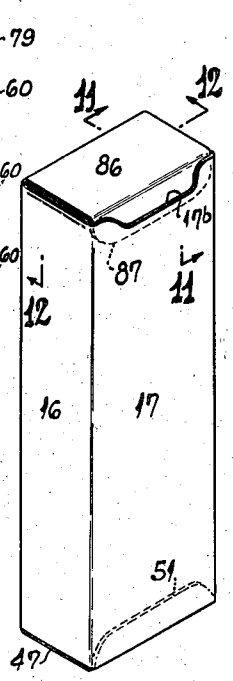

Fig. 10

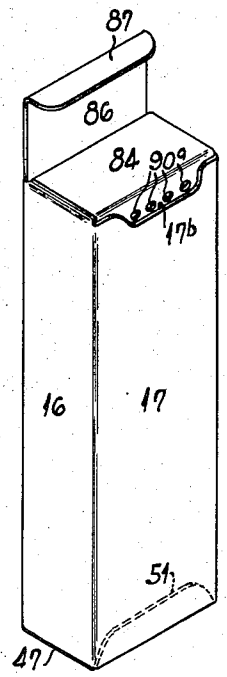

Fig. 13

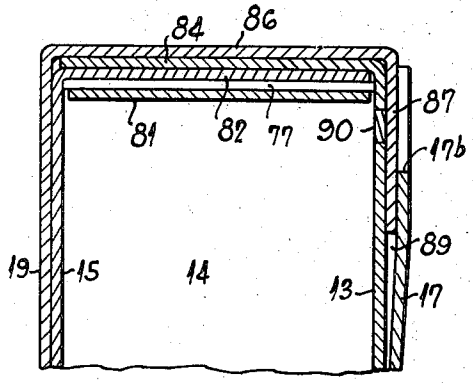

Fig. 11

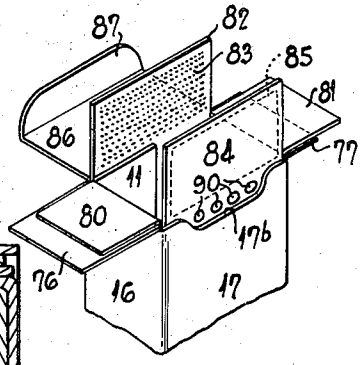

Fig. 14

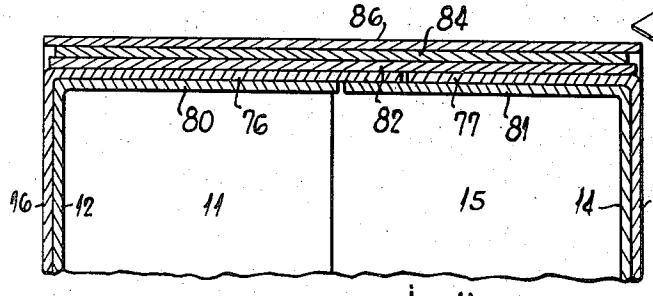

Fig. 12

Inventor:
WALTER A. BECKER

By

Eaton & Brown
Attorneys

Patented May 23, 1944 2,349,605

UNITED STATES PATENT OFFICE

2,349,605

DISPENSING CONTAINER

Walter A. Becker, Charlotte, N. C., assignor to Old Dominion Box Company, Lynchburg, Va., a corporation of Virginia

Application January 1, 1943, Serial No. 471,040

6 Claims. (Cl. 229—17)

This invention relates to containers for holding powdered or granulated substances such as talcum powder, salt, pepper, and the like, and more particularly to an article of this type employing a novel dispensing construction and closure means therefor.

It is a prime object of this invention to provide a rectangular cardboard container having side and end walls of a double thickness which are formed from a blank of material wound in a spiral manner, said container having the top and bottom walls sealed by projecting tabs which extend from the outer side or end walls so that the edges thereof will fit between the proximate inside faces of the inner side or end walls. Since an outer side or end wall of the container is wider than the inner side or end wall respectively by an amount equal to twice the thickness of the blank of material, it is evident that the tab extending from an outer wall will be slightly wider than the normal inside width of the container; consequently, when the edges of an outside tab are pressed between the proximate faces of the inner side walls, there will be a slight spreading and thus, a tight seal will be provided.

It is another object of this invention to provide a spirally wound container having inner and outer walls, one of said inner walls having perforations therein for permitting the contents of the container to be dispensed, and the companion outer wall having a closure flap formed therefrom for closing the perforations when the contents are not being dispensed.

It is yet another object of this invention to provide a cardboard container of the class described in which the contents may be completely sealed or encased for storage and shipment, but being constructed in such a manner that it may be easily converted into a dispenser with a closure member therefor. In other words, the above-mentioned perforations are not present in the inner wall when the contents are packed. Instead, the inner wall is scored at the points where the perforations are to be provided so that small sections of the inner wall can be easily removed when the container is converted into a dispenser.

Some of the objects of the invention having been stated, other objects will appear as the description proceeds when taken in connection with the accompanying drawings, in which:

Figure 1 is a plan view of a container blank of cardboard from which one type of the present container is formed;

Figure 2 is an isometric view of the container after it has been formed from the blank shown in Figure 1;

Figure 3 is a sectional plan view taken along the line 3—3 in Figure 2;

Figure 4 is a vertical sectional view, with the central portion thereof broken away, and taken along the line 4—4 in Figure 2;

Figure 5 is a vertical sectional view, with the central portion thereof broken away, and taken along the line 5—5 in Figure 2;

Figure 6 is an isometric view of the top portion of the container with the top flap opened, and showing the perforations in the inner top wall through which the contents from the container are dispensed;

Figure 7 is an isometric view of the top portion of the container showing the individual tabs and flaps employed in forming the same;

Figure 8 is an isometric view of the unfolded bottom portion of the container, said view illustrating the tabs and flaps employed in forming the bottom construction;

Figure 9 is a plan view of a body blank from which a slightly modified type of container is formed;

Figure 10 is an isometric view of the container after it has been formed from the blank shown in Figure 9;

Figure 11 is an enlarged vertical sectional view taken along the lines 11—11 in Figures 10 and 12 illustrating the top construction of the container;

Figure 12 is a sectional view taken along the line 12—12 in Figure 10 further illustrating the top construction of the container;

Figure 13 is an isometric view of the container, similar to Figure 10, but showing the top flap in an opened position and displaying the perforations through which the contents from the container are dispensed;

Figure 14 is an isometric view of the upper portion of the container showing the top tabs and flaps in unfolded positions.

Referring more particularly to the drawings, the numeral 10 broadly designates a cardboard body blank from which one form of my improved container is constructed. This blank is divided into side and end wall sections 11, 12, 13, 14, 15, 16, 17, 18, and 19 by substantially parallel crease lines 20, 21, 22, 23, 24, 25, 26, and 27. The top edges of sections 12, 13, 14, 15, 16, 18, and 19 are defined or outlined by crease line 30, which line is disposed at substantially right angles to the first mentioned crease lines, whereas the bottom edges of these same sections are defined or out-

lined by a second crease line 31, said line 31 being substantially parallel to crease line 30.

By observing Figure 1, it will be noted that the inner end wall section 12 has integral with its upper and lower edges, suitable end tabs 32 and 33 respectively; the inner side wall section 13 has integral with its upper and lower edges, end flaps 34 and 35 respectively; the inner end wall section 14 has integral with its upper and lower edges, suitable end tabs 39 and 40 respectively; the inner side wall section 15 has integral with its upper and lower edges, flaps 41 and 42 respectively, said flap 41 having a substantially square hole 43 disposed in its central portion. The outer end wall section 16 has integral with its lower edges suitable end tabs 37 and 44 respectively, and the outer end wall section 18 has integral with its upper and lower edges, tabs 38 and 45 respectively. Finally, the outer side wall section 19 has integral with its upper and lower edges, flaps 46 and 47 respectively, said flaps having integral with their outer margins suitable tabs 50 and 51, and these tabs are united to the free edges of flaps 46 and 47 along crease lines 48 and 49 respectively.

It will be noted by observing Figures 1, 4, 5, and 7 that tabs 32, 39, 37, and 38 have V-shaped edge notches 32*a*, 39*a*, 37*a*, and 38*a* respectively. These notches substantially coincide with the corresponding walls of the square hole 43 in flap 41 when the container is erected.

When it is desired to construct a container from the blank shown in Figure 1, the following steps are carried out substantially in the order named:

(*a*) The blank 10 is bent about crease lines 20, 21, 22 and 23 to form side and end wall sections 11, 12, 13, 14, and 15 into a rectangular inner container wall, and then the adjacent contact surfaces of side and end wall sections 11 and 15 are adhesively or otherwise secured together as at 60.

(*b*) The remaining side and end wall sections 16, 17, 18 and 19 of the blank are then bent about crease lines 24, 25, 26, and 27, and spirally wound around the previously formed rectangular inner wall, after which the sections 15 and 19 are adhesively or otherwise secured together as at 61. After the above-named operations have been carried out, the container side and end walls will have a double thickness at all places, and at some places, there will be a triple thickness of the blank. (See Figure 3.)

(*c*) The construction of the bottom wall is begun by turning flaps 33 and 40 inwardly about crease lines 31, thereby forming the first or inside wall for the bottom. (Figures 4, 5, and 8.)

(*d*) Flaps 44 and 45 are then folded inwardly about crease lines 31 upon flaps 33 and 40. If desired, the adjoining surfaces of the members 44, 45, 33, and 40 may be adhesively or otherwise secured together as at 66. The flaps 44 and 45 form the second bottom thickness. It should be noted that a butt joint is provided between the proximate ends of flaps 33 and 40, said joint being positioned in staggered relation to a similar butt joint between the proximate ends of flaps 44 and 45, thereby giving an added strength to the bottom structure.

(*e*) Next, the flap 42 is turned inwardly upon the outer surfaces of flaps 44 and 45 about the crease line 31. If desired, the adjoining surfaces of flaps 42, 44, and 45 may be adhesively or otherwise secured together as at 67.

(*f*) The flap 35 is then turned inwardly upon the outer surface of flap 42 and about crease lines 31. Likewise, the adjacent surfaces of flaps 35 and 42 may be adhesively or otherwise secured together as at 68, if desired.

(*g*) Finally, the outside flap 47 and associated tab 51 are turned inwardly over flap 35 and about crease line 31 as an axis. At the same time, the tab 51 is also turned inwardly about crease line 49 and inserted in a crack or opening 70 disposed between inner and outer side walls 13 and 17. The tab 51 is then secured in an inserted position between the walls 13 and 17 by adhesive or other materials as at 71. In most instances, a securing means between the adjacent surfaces of tabs and flaps 33, 35, 40, 42, 44, and 45 is not provided because outer tab 51, when secured as at 71, will maintain the bottom in a closed position. However, where an added strength is desired, it may be necessary to adhesively or otherwise secure the adjacent surfaces of the above-named tabs and flaps together.

(*h*) The construction of the top wall is begun by folding the tabs 32, 39, 37, and 38 inwardly about their respective crease lines 30. When folded inwardly, the proximate edges of these tabs are disposed a substantial distance apart from each other. (Figures 5 and 7.)

(*i*) With the tabs 32, 39, 37 and 38 folded inwardly at substantially right angles to their associated end walls, the flap 41 is then turned inwardly about its crease line 30, over tabs 37 and 38, and then the adjoining surfaces of members 41, 32, and 39 are adhesively or otherwise secured together as at 72. This last-named operation completely closes the top wall of the container except for the square perforation 43 disposed in the central portion of tab 41.

(*j*) The flap 34 is now turned inwardly about crease line 30 and over the flap 41, and then the adjoining surfaces of members 34 and 41 are adhesively or otherwise secured together as at 73. With the flap 34 adhesively secured in position, the perforations 36*a* will be disposed within the confines of the square opening 43 in the flap 41 therebeneath. Of course, it is understood that the perforations 36*a* are formed by the removal of plugs or sections 36 from the flap 46. Usually the plugs 36 are partially severed from the flap 34, but are permitted to remain in position, so that the contents within the container cannot escape. It is only when the container must be used as a dispenser that the plugs 36 are removed to form perforations 36*a*.

(*k*) The last operation consists in folding the flap 46 and its associated tab 50 inwardly about crease line 30, so that the flap 46 will cover the flap 34 and its associated perforations 36*a* or plugs 36. At the same time, the tab 50 is turned about its crease line 48, and then releasably inserted in a crack or opening 75 between the side walls 13 and 17. Since the side walls 13 and 17 are not secured together at the point of insertion, it is seen that a slight friction will be present between the proximate faces of the separated side walls and the opposed faces of the inserted tab. Therefore, the tab 50 will be releasably held in position. As a means for facilitating the removal of the tab 50 from the crack 75, a suitable thumb notch 17*a* is provided in the upper edge of side walls 17.

Attention is called to the fact that the tabs 37 and 38 are slightly wider than the tabs 32 and 39 immediately therebelow, because the tabs 37 and 38 are extensions of the outer end walls

16 and 18. Therefore, the side edges of tabs 37 and 38 will fit into closer engagement with the inner side walls 13 and 15 to form a more perfect seat and to prevent sifting of the contents from the package. This same principle of providing a tight fit is employed in the top and bottom walls of both forms of the invention.

Modified form

The container shown in Figures 9 to 14 inclusive has its side walls, end walls, and bottom wall formed identically in the same manner as just described in connection with the container shown in Figures 1 to 8 inclusive. The top structure of this last-named container is somewhat different, however, because the perforations through which the contents from the container are dispensed, are located in a slightly different position. Also there is a slight difference in construction insofar as the top flap and tab structure is concerned.

By referring to the upper portion of Figure 9, it can be seen that a container blank is broadly designated by the reference character 79, said blank having integral with its upper edge a novel tab and flap structure for forming the top wall of the container. For example, the inner end wall section 12 has a tab 80 connected thereto along a crease line 30; the inner side wall section 13 has connected to its upper edge along crease line 30 a flap 84; the inner end wall 14 has connected to its upper edge along crease line 30 a tab 81; and the inner side wall 15 has connected to its upper edge along crease line 30 a flap 82; and the outer end wall sections 16 and 18 have connected to the upper edges thereof along crease line 30 suitable tabs 76 and 77 respectively. The outer side wall section 17 has a notch 17*b* in its upper edge which has a slightly different shape from the notch 17*a* described in connection with side wall section 17 of the preceding form of the invention. This notch not only serves as a thumb space whereby the top flap may be removed from inserted position, but also forms a passageway in the outer wall of the container whereby perforations 90*a* as shown in Figure 13 may be exposed when suitable outer top members 86 and 87 are opened. The outer flap 86 is connected to the upper edge of side wall section 19 along crease line 30 and the free end of the flap 86 has hingedly secured thereto along crease line 88 the tab 87.

Since the side walls, end walls, and bottom walls of this container are formed in the manner previously described in connection with the first form of this invention, another description will not be made, but like reference characters will be given like parts. The top wall structure, however, is somewhat different, and therefore, a step by step description will be given as to its formation in substantially the proper order. The steps are as follows:

a. After the side walls, end walls, and bottom walls have been formed, the top structure is begun by turning the tabs 80 and 81 inwardly about the crease line 30 to a position where they are disposed in a plane substantially parallel to the bottom of the container, thus forming a butt joint between the free ends thereof. Then the tabs 76 and 77 are likewise folded inwardly about crease line 30 and on top of tabs 80 and 81, thus forming a second butt joint between the free ends of the tabs. It will be noted that the butt joints between the upper and lower tabs are staggered.

b. The flap 82 is then turned inwardly about crease line 30 over the tabs 76 and 77, after which the members 76, 77, and 82 are adhesively secured together as at 83. This operation provides a triple top wall thickness and serves to close the top of the container.

c. The flap 84 is then turned inwardly over flap 82 and about crease line 30 as an axis of rotation, after which the adjacent surfaces of members 82 and 84 are adhesively or otherwise secured together as at 85. Flap 84 serves as another thickness for the top of the container, members 80 and 81 being the first thickness, members 76 and 77 being the second thickness, member 82 being the third thickness, and member 84 being the fourth thickness.

d. Finally the flap 86 and its associated tab 87 are turned inwardly over the flap 84 about crease line 30. At the same time, the tab 87 is turned inwardly about crease line 88 and then releasably inserted in a crack or opening 89 between the side walls 13 and 17. When the tab 87 is in an inserted position as shown in Figure 10, it is evident that the perforations 90*a*, or the plugs 90 which are disposed in these perforations when the container is packed, will be covered. As in the preceding case, the perforations 90*a* are not present when the container is packed, but instead, the plugs 90 are partially severed from the front side wall 13 and allowed to remain in position. When the consumer desires to dispense the contents from the package, however, as many of the plugs 90 are removed as desired, to thereby form perforations 90*a*.

It is therefore seen that in this last form of the invention, the perforations are disposed in the front wall and are adapted to be closed or covered by the tab 87 on the free end of flap 86 when the contents are not being dispensed. It is also seen that the perforations 90*a* are immediately exposed to view when the tab 87 is removed from opening 89 on account of the shape of notch 17*b*. This notch also provides a thumb space, whereby the tab 87 may be easily removed from opening 89.

In order to more clearly describe the invention the wall sections 11, 13, 15, 17, and 19 have been referred to as side walls, and the wall sections 12, 14, 16 and 18 have been referred to as end walls. In some of the claims, however, all of these wall sections are broadly referred to as side walls since the sections together form four sides of the container.

As in the preceding form of the invention, the outer end wall tabs 76 and 77 are wider than the normal inside width of the container, therefore, when the opposed edges of these tabs are inserted between the proximate inner sidewall faces as shown in Figure 11, the walls will be slightly expanded, thus resulting in a tighter seal or fit.

The tabs 32, 33, 39, 40, 37, 44, 38, 45 and the flaps 34, 35, 41, 42, 46, and 47 as well as tabs 86, 81, 76, and 77 and flaps 83, 84, and 86 may be broadly referred to as extensions.

In the drawings and specification, there has been set forth a preferred embodiment of the invention, and although specific terms are employed, they are used in a generic and descriptive sense only and not for purposes of limitation, the scope of the invention being defined in the claims.

I claim:

1. In a rectangular paper box formed from a single blank and being scored to provide two inner and outer side walls and two inner and outer

end walls when the blank is folded to first form the inner end and side walls and by further folding to form the outer side walls and end walls, each of the inner end walls having tabs thereon, adapted to be folded towards each other, so that their free ends are in abutting relation, and each of the outer end walls also having tabs thereon adapted to be folded towards each other, so that their free ends are in abutting relation, the inner side walls having flaps on each end thereof adapted to be folded towards each other in overlapping relation and one of the outer side walls having flaps extending from each end thereof adapted to be folded over the tabs of the inner and outer end walls and over the flaps of the inner side walls, the flaps on one end of one of the outer side walls having tabs on their free ends adapted to be inserted between the inner and outer walls opposite the hinge point of the last-named flap to securely hold all of the tabs and flaps in folded position, the flaps extending from the inner side walls being perforated.

2. A rectangular paper box formed from a single blank and having inner and outer side walls and inner and outer end walls, the inner and outer end walls having tabs extending from each end and scored to be folded inwardly towards each other and being of such length as to cause their free ends to be in abutting relation when folded, the tabs extending from one end of the blank being notched at their free ends to provide an opening between their free ends, the inner side walls having flaps extending from each end thereof and being scored to fold inwardly in overlapping relation to each other, the flaps at one end of the inner side walls having perforations therein which coincide when the flaps are folded, one of the outer side walls having flaps extending from each end thereof and being scored to fold over the ends of the box and having an extension tab on their free ends adapted to be inserted between the inner and outer side walls which are remote from the hinge point of the last-named flap.

3. A rectangular paper box formed from a continuous length of material comprising inner and outer end walls and inner and outer side walls, the inner and outer end walls having extensions or tabs on each end thereof scored to be folded inwardly towards each other with their ends in abutting relation, the inner side walls having extensions or flaps on each end thereof scored to be folded inwardly towards each other in overlapping relation, one of the outer side walls having an extension or flap on each end thereof scored to fold inwardly over the aforesaid extensions or tabs and flaps and having a tab on the free ends thereof scored to be folded and inserted between the inner and outer side walls which are opposed to the outer side wall having the extensions or flaps projecting from each end thereof.

4. A rectangular paper box formed from a continuous length of material comprising inner and outer end walls and inner and outer side walls, the inner and outer end walls having extensions or tabs on each end thereof scored to be folded inwardly towards each other with their ends in abutting relation, the inner side walls having extensions or flaps on each end thereof scored to be folded inwardly towards each other in overlapping relation, one of the outer side walls having an extension or flap on each end thereof scored to fold inwardly over the aforesaid extensions or tabs and flaps and having a tab on the free ends thereof scored to be folded and inserted between the inner and outer side walls which are opposed to the outer side wall having the extensions or flaps projecting from each end thereof, all of the extensions on the inner end walls and the outer side walls at one end of the box having openings therein for permitting the contents of the box to be emptied therefrom when the extension or flap on the outer side wall at that end of the box is moved to open position.

5. A rectangular paper box formed from a continuous length of material comprising inner and outer end walls and inner and outer side walls, the inner and outer end walls having extensions or flaps on each end thereof scored to be folded inwardly towards each other with their ends in abutting relation, the inner side walls having extensions or flaps on each end thereof scored to be folded inwardly towards each other in overlapping relation, the inner end walls and side walls together with their flaps or extensions forming an inner shell, one of the outer side walls having an extension or flap on each end thereof scored to fold inwardly over the portion of the inner shell formed by the extensions on the inner side walls and inner end walls and each of the last-named flaps having a tab on the free end thereof scored to be folded and inserted between the inner and outer side walls remote from the side wall of which the last-named flap is a part, the inner shell having perforations therein adapted to be covered by the extension on the outer side wall when it is in folded position.

6. A rectangular paper box formed from a continuous length of material comprising inner and outer end walls and inner and outer side walls, the inner and outer end walls having extensions or tabs on each end thereof scored to be folded inwardly towards each other with their ends in abutting relation, the extensions or tabs on the inner and outer end walls being unequal in length, so that when moved to folded position, the junction point between the extensions or tabs on the inner end walls will be off-set with relation to the junction point between the extensions or tabs on the outer end walls, the inner side walls having extensions or flaps on each end thereof scored to be folded inwardly towards each other in overlapping relation, one of the outer side walls having an extension or flap on each end thereof scored to fold inwardly over the aforesaid extensions or tabs and flaps and having a tab on the free ends thereof scored to be folded and inserted between the inner and outer side walls which are opposed to the outer side wall having the extensions or flaps projecting from each end thereof, the outer side wall opposed to the outer side wall having the extensions or flaps thereon being cut away at one end thereof and the inner side wall which is contiguous to the cut away portion of the outer side wall having perforations therein through which contents of the box may be sifted when the extension or flap on the opposed outer side wall at that end of the box is moved to open position.

WALTER A. BECKER.