July 8, 1930. L. C. NORTON 1,770,250

CONTROL MEANS FOR DOOR CLOSERS

Filed Aug. 28, 1926

Fig. 1.

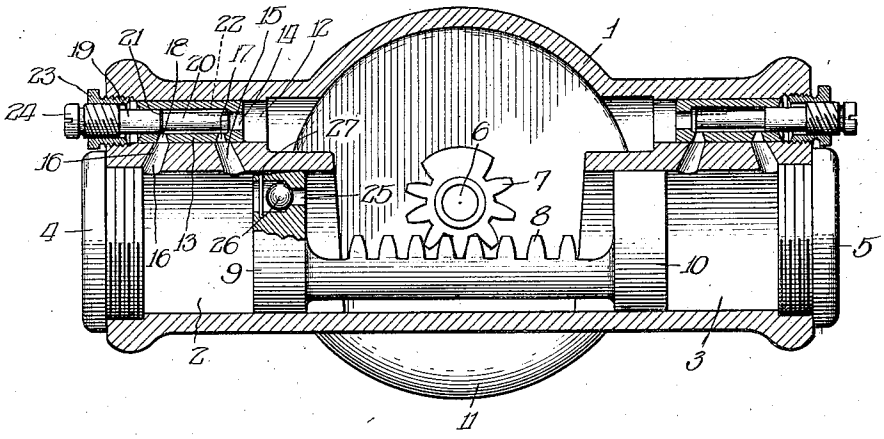

Fig. 2.

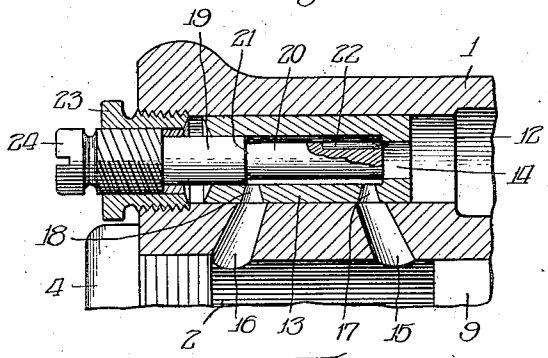

Fig. 3.

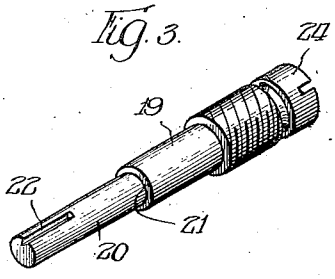

Fig. 4.

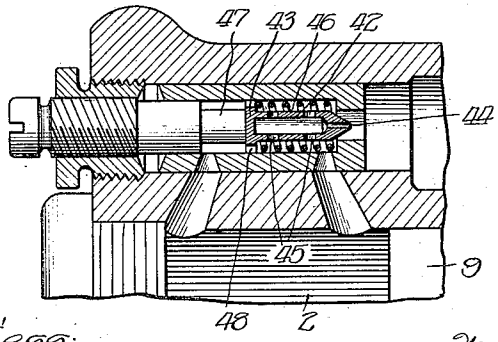

Fig. 5.

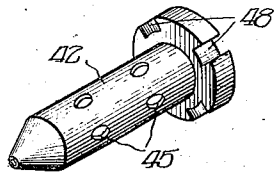

Inventor:
Louis C. Norton,
By Wilkinson, Hurley, Byrne, & Knight.
Attys.

Witness:
R. Burkhardt.

Patented July 8, 1930 1,770,250

UNITED STATES PATENT OFFICE

LEWIS C. NORTON, OF CHICAGO, ILLINOIS, ASSIGNOR TO NORTON LASIER COMPANY, OF CHICAGO, ILLINOIS, A CORPORATION OF ILLINOIS

CONTROL MEANS FOR DOOR CLOSERS

Application filed August 28, 1926. Serial No. 132,108.

My invention relates to improvements in regulating means for fluid controlled door checks, and more particularly to door checks of the closer type which operate to force the door closed and control its movement during the closing operation.

My invention has special adaptation as a regulating means for fluid operated door checks of a type to be positioned between a door frame and a door, connected by pivoted links in a manner to convert swinging movement of the door to oscillatory movement of a spindle mounted in the door check, the latter being connected to suitable mechanism to convert the oscillatory movement to a reciprocatory movement of a double-headed piston. The piston is in a position to slide in a fluid cylinder, the latter being provided with a by-pass in communication with the cylinder through suitable ports, the by-pass and ports being controlled by regulating means for restricting the passage of fluid in a manner to control the movement of the piston as desired. Door checks of this type, for convenience in installation, that is, to render them capable of operation whether applied to a left-hand or right-hand swinging door, are provided with double pistons and double cylinders, each set having separate control means and being oppositely disposed so as to be effective as a fluid control, one set when the piston is moved in one direction, as applied to a door of one hand, the other set when it is moved in the opposite direction, as applied to a door of the other hand, but only one cylinder of the door check operating on a particular installation. When the door check is applied to a particular door, the regulating means for the cylinder and piston, to be effective for controlling the closing operation, is adjusted in a manner to restrict the ports to effect the desired control of the closing action, the opposite control means being left open in a manner to permit the free flow of fluid in order that the check will offer no resistance to the opening movement of the door.

In order to prevent any retarding action on the suction stroke of the operating piston, that is, when the door is being opened, a passage through the piston head is provided having a one-way check valve therein, the valve opening in a direction to pass fluid with comparatively no resistance when the piston is moved in the direction caused by the opening of the door, and thus no reliance is placed on the restricted ports to supply fluid at this time.

In controlling the closing action of doors, it has been found desirable to provide for two speeds, first, a comparatively rapid speed which brings the door to a substantially closed position, which will hereinafter be termed the general speed, thus preventing undesirable drafts through the open doorway for unnecessarily long periods, and secondly, a very slow speed for the last few inches of its swing, hereinafter termed the latch speed, to effect an easy and quiet engagement at the latch. To this end, it has been the practice to provide two distinct fluid passages, controlling each to give the desired fluid resistance, fluid ports being so positioned in the cylinder relative to the piston travel that the piston movement, and in turn the door, is controlled in a manner to give the desired closing movement.

In order to eliminate a plurality of adjustments for the various ports, it has been proposed to provide a single regulating screw so positioned relative to the by-pass and the ports and so constructed that it is possible to regulate the two fluid passages in one operation. Regulating devices of this type are disclosed in patents issued to L. C. Norton, No. 868,357, patented October 15, 1907, and No. 1,152,339, patented August 31, 1915, and over which my invention is an improvement. The regulating screw shown in Patent No. 868,357 is provided with a reduced portion at its outer end in a manner to form a shoulder intermediate its length, the surface of the shoulder being provided with grooves adapted to cooperate with one of the ports to regulate the same in the manner of a spigot valve, varying the port size from a completely closed to a completely open condition by movement of the screw through a 180° arc. It is to be noted that the position of the shoulder relative to the end of the pin is such that the second port which is the one to be effective to control the latch speed of the door, is reg-

ulated before the end of the pin is in a position to restrict the by-pass or in other words, the general speed of the door is determined.

The Patent No. 1,152,339 discloses an improvement of the pin just described inasmuch as it effects, by the regulation of a single screw, an adjustment of the port controlling the general speed of the door before the second port is adjusted, this being accomplished by positioning the shoulder further back on the shank of the screw so that on inward movement the end of the screw will cooperate with a portion of the by-pass to effect an adjustment of the first port before the shoulder has come into a position to effect its adjustment. The restriction of the by-pass is accomplished by introducing the end of the pin, which is provided with a V-groove, into a restricted portion of the by-pass to obstruct all fluid flow except through the groove, the amount of fluid permitted to pass being determined by the size of the groove effective at a given position of the screw. In this device, the screw is provided with extremely fine threads adjacent its head which engage in a threaded bushing positioned in the outer end of the by-pass, the gradual pitch permitting the screw to be advanced until the proper by-pass adjustment is effected and then permit the screw to be further turned within the limits of 180° to effect an adjustment of the second port without substantially effecting the first. This type of pin is a distinct advance over that disclosed in the other patent described for the reason that it permits a more accurate adjustment at the time of installation although the two pins act substantially the same having once been set in a regulated position. The advantages of regulating the port controlling the general speed of the door first can be readily seen when it is understood that the carpenters installing door checks of this type use the trial method, that is, they permit the door to swing shut, at the same time turn the screw down to the position where the desired controlled movement is had, and inasmuch as the latch speed of the door is contingent upon the general speed, it is obviously advantageous to adjust the general speed first.

In practice it has been found that carpenters will not take the time to turn down this type of screw in order to properly adjust the door check and it is, therefore, highly desirable to provide a door check which may be adjusted by slight turning of a regulating screw, and to this end, it is one of the purposes of my invention to provide a regulating screw which will embody all the advantages disclosed in the above-described patents and yet eliminate the necessity for the extremely fine pitch threads which are a necessary element in the patented devices.

I have found further that the speed of doors through the first part of the closing movement, or the general speed, need not be controlled beyond the point of establishing a fixed speed for all doors, and therefore, another purpose of my invention is to provide a single screw for adjusting the latch speed and for establishing a predetermined general speed in one operation, the general speed being the same for all doors.

A further object of my invention is to provide a door check of this general type having a V-groove in the piston surface in a position to pass over the opening of the first port in order to provide an intermediate speed for the piston, the groove providing a gradually decreasing passage for fluid past the piston through the first port as the piston moves past said port, and in this manner the door is permitted to close at a comparatively rapid but safe rate up to within a fraction of an inch of complete closure, the final movement being accomplished by a leakage of the fluid through the ports, the second port being completely shut off when such an operation is desired.

Other objects of my invention will be more fully understood from the following detail description of a preferred embodiment, when considered in connection with the accompanying drawing, in which—

Figure 1 is a cross-sectional view, cut in a horizontal plane, showing a door check embodying my improved control means;

Figure 2 is an enlarged cross sectional view through the improved control valve disclosing one form of my invention;

Figure 3 is a perspective of a regulating screw employed in the modification disclosed in Figure 2;

Figure 4 is a view similar to Figure 3 showing a second modification of my invention in which the by-pass adjusting means are shown as a perforated valve plug adapted to be operated by the end of the screw, and

Figure 5 is an enlarged perspective of the valve plug embodied in the modification disclosed in Figure 4.

Referring to the drawings one type of door check to which my invention may be applied is disclosed in Figure 1, which embodies a suitable casing, designated as 1, provided with oppositely disposed cylinders 2 and 3, the outer ends of which are closed by screw plugs 4 and 5. Centrally disposed and mounted in suitable bearings within the casing is a spindle 6 which is attached by pivoted link mechanism to either the door or door frame depending upon which of these elements the check device is mounted on in a manner to cause the relative movement between the door and frame to oscillate the spindle 6. On the inner end of spindle 6 a gear 7 is mounted to mesh with the rack 8 having on its outer ends pistons 9 and 10 in a position to slide in oppositely disposed cyl-

inders previously mentioned. The large portion of the casing 1, shown at 11, is provided to house suitable spring means attached between the housing and the spindle in a manner to impart a spring force to the spindle so as to close the door, the showing of which, however, has been omitted in the drawing.

The structure and operation of the two checking cylinders at opposite sides of the device are the same, and therefore, for purposes of description, only one side will be described.

Cylinder 2 is provided with a by-pass duct 12 having a bushing 13 positioned therein for the purpose of providing a more accurate fit for the adjusting screw, the bushing being restricted as at 14 at its inner end so as to receive the end of the pin in a manner to effect an adjustment to be described later. The by-pass duct is connected to the cylinder by ports, such as shown at 15 and 16, the bushing likewise being provided with openings 17 and 18 to complete the communication between the cylinder and the interior of the bushing, the two ports in a single cylinder being so positioned relative to the travel of the piston that one of said ports, such as shown in Figure 1 at 15, becomes effective prior to the remaining port, adjustment of the first-named port effecting the movement of the general speed of the door whereas the adjustment in the last-named port controls the latch speed.

Positioned in the by-pass duct 12 is an adjusting screw 19 which is provided with a reduced end 20 having a diameter less than that of the bore of the bushing in which it fits, but further provided with an enlarged portion exactly fitting the bore of the bushing and presenting a shoulder, designated as 21, the reduced portion having a groove 22 cut in its surface and extending to its ends, which groove is of uniform size throughout its length. The bushing shown at 23 is screwed into the cylinder wall and is internally threaded to receive the regulating screw, the threaded engagement of which is preferably of double or triple threads to provide a relatively steep pitch in order that a single revolution of the regulating screw may cause its advance an amount equal to the diameter of the port controlling the latch speed. The head of the regulating screw may be provided with any suitable means to receive a tool, a slot 24 adapted to receive the screw driver being the means shown in the drawing.

A passage 25 having a one-way check valve 26 positioned therein is provided in the piston head 9, in a manner to permit fluid to pass through the piston when the piston is moving away from the cylinder end, but to prevent any passage of fluid during movement in the opposite direction, that is, on the working stroke. Piston 9 is also provided with a V-groove 27, as shown in Figure 1, in a position to pass over the opening of port 15 when the piston moves on its working stroke, the groove extending to the edge of that side of the piston which is adjacent the end of the cylinder.

Referring now to Figure 4, this modification differs only in the manner of effecting the restriction of the by-pass which, in this form, is accomplished by providing a plug slidably mounted in the by-pass duct and having a head at one end to fit the main portion of the by-pass and with a taper and an orifice at its other end, this last named end fitting the restriction in the by-pass to obstruct the passage of fluid except that which can pass through the orifice. The plug is normally open, being held away from the by-pass restriction by spring 46 in a manner to abut the end of the regulating screw 47 in order that the position of the screw will determine the position of the plug.

As shown in Figure 5, the head 43 of the plug is provided with a notched periphery, such as shown at 48, which permits the free passage of fluid past the plug when the port adjacent the end of the cylinder is effective.

In operation, to effect the desired adjustment for the various movements of the door to which the check is applied, the screw on the closing side of the check is turned a small amount which advances it sufficiently to cause the reduced grooved end to fit the restricted opening in the bushing, after which time the shoulder is in a position to pass over the second port opening and in the event the pin is turned further, this port will be accordingly regulated. Due to the uniform size of the groove in the end of the pin, further movement of the adjusting screw will have no effect on the general speed of the door, this having once been established, and therefore, by trial the proper adjustment of the latch speed can be had within a range of one revolution of turning the regulating screw. This having been done, regulating means on the opposite side of the door check is screwed outwardly to the extreme outer position to provide unobstructed passages for the fluid through the various ports in order that there will be no resistance to the opening movement of the door.

The operation of the modification disclosed in Figures 4 and 5 is similar to that above, the proportions and relationship of the parts being such that the plug 42 is seated to establish a restricted by-pass prior to any adjustment of the second port as effected by the shoulder of the pin. In this form, the end of the door check, subject to the opening movement, is left open in the same manner as described with reference to the other modification, the plug being forced from its seat by the action of the coiled spring when the screw is in a position to uncover the port.

The above detail description and disclosures in the drawing represent a preferred embodiment of my invention but it is my intention to include all modifications that fall within the scope of the appended claim.

I claim:

In a door check, the combination of a fluid cylinder, a piston and control means therefor comprising a regulating screw having a reduced end, and a by-pass duct having a portion of reduced diameter and adapted to receive said screw, the portion of reduced diameter receiving the reduced end of said screw, two ports connecting said by-pass with said cylinder, one of which is adapted to be regulated by said screw, said screw having a groove of uniform size in its reduced portion extending to the end thereof, the length of the reduced portion of said screw being slightly greater than the distance between the reduced portion of said by-pass and the port to be controlled.

Signed at Chicago, Illinois, this 21st day of August, 1926.

LEWIS C. NORTON.