(12) INTERNATIONAL APPLICATION PUBLISHED UNDER THE PATENT COOPERATION TREATY (PCT)

(19) World Intellectual Property Organization
International Bureau

(43) International Publication Date
24 January 2019 (24.01.2019)

WIPO | PCT

(10) International Publication Number
WO 2019/016708 A1

(51) International Patent Classification:
B65C 1/02 (2006.01) *B65G 47/82* (2006.01)
B65C 3/10 (2006.01) *B65G 47/91* (2006.01)

(21) International Application Number:
PCT/IB2018/055308

(22) International Filing Date:
17 July 2018 (17.07.2018)

(25) Filing Language: English

(26) Publication Language: English

(30) Priority Data:
2017/00357 17 July 2017 (17.07.2017) ZA

(71) Applicant: **RIGHT EPHARMACY (PTY) LTD** [ZA/ZA]; 3rd Floor Outspan Building, 1006 Lenchen Avenue North, 1057 Centurion (ZA).

(72) Inventor: **VANBILJON, Andre**; 3rd Floor Outspan Building, 1006 Lenchen Avenue North, 1057 Centurion (ZA).

(74) Agent: **BREDENKAMP ATTORNEYS**; PMA House, Block B, Ground Floor, Tijger Vallei Office Park, Silver Lakes Road, Silver Lakes, 0081 Pretoria (ZA).

(81) Designated States *(unless otherwise indicated, for every kind of national protection available)*: AE, AG, AL, AM, AO, AT, AU, AZ, BA, BB, BG, BH, BN, BR, BW, BY, BZ, CA, CH, CL, CN, CO, CR, CU, CZ, DE, DJ, DK, DM, DO, DZ, EC, EE, EG, ES, FI, GB, GD, GE, GH, GM, GT, HN, HR, HU, ID, IL, IN, IR, IS, JO, JP, KE, KG, KH, KN, KP, KR, KW, KZ, LA, LC, LK, LR, LS, LU, LY, MA, MD, ME, MG, MK, MN, MW, MX, MY, MZ, NA, NG, NI, NO, NZ, OM, PA, PE, PG, PH, PL, PT, QA, RO, RS, RU, RW, SA, SC, SD, SE, SG, SK, SL, SM, ST, SV, SY, TH, TJ, TM, TN, TR, TT, TZ, UA, UG, US, UZ, VC, VN, ZA, ZM, ZW.

(84) Designated States *(unless otherwise indicated, for every kind of regional protection available)*: ARIPO (BW, GH, GM, KE, LR, LS, MW, MZ, NA, RW, SD, SL, ST, SZ, TZ, UG, ZM, ZW), Eurasian (AM, AZ, BY, KG, KZ, RU, TJ, TM), European (AL, AT, BE, BG, CH, CY, CZ, DE, DK,

(54) Title: LABELLING SYSTEM AND METHOD

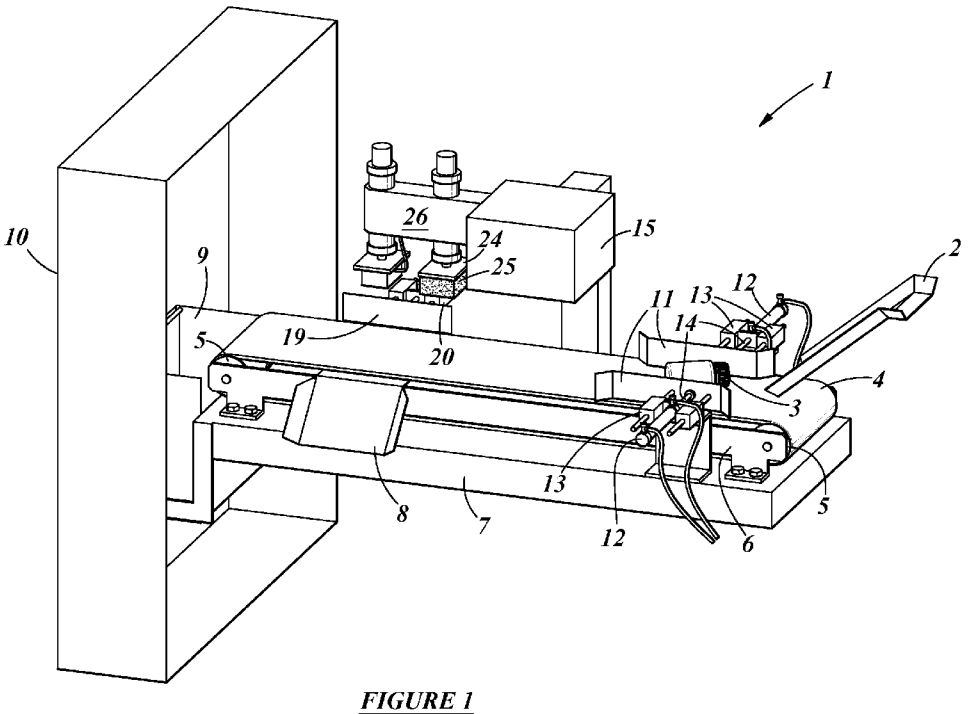

FIGURE 1

(57) Abstract: This invention relates to a labelling apparatus (1) and method for labelling different shapes, sizes and material types of packaging (3, 36) such as cardboard or plastics material boxes, plastics or other material bottles and sachets all containing medicaments being dispensed. The labelling apparatus (1) includes a conveyor means (4) having a receiving end for receiving an article (3, 36) to be labelled from a chute (2) and a discharge end for discharging the article (3, 36) once labelled to a receiving container (9), a label applicator (15) for attaching a label (29) to the article and a label securing means (25) for securely forcing the label (29) onto the article.

WO 2019/016708 A1

[Continued on next page]

EE, ES, FI, FR, GB, GR, HR, HU, IE, IS, IT, LT, LU, LV, MC, MK, MT, NL, NO, PL, PT, RO, RS, SE, SI, SK, SM, TR), OAPI (BF, BJ, CF, CG, CI, CM, GA, GN, GQ, GW, KM, ML, MR, NE, SN, TD, TG).

Published:

— *with international search report (Art. 21(3))*
— *before the expiration of the time limit for amending the claims and to be republished in the event of receipt of amendments (Rule 48.2(h))*
— *in black and white; the international application as filed contained color or greyscale and is available for download from PATENTSCOPE*

LABELLING APPARATUS AND METHOD

FIELD OF THE INVENTION

This invention relates to a labelling apparatus and method and more particularity, but not exclusively, to a labelling apparatus and method for labelling different shapes, sizes and material types of packaging such as cardboard or plastics material boxes, plastics or other material bottles and sachets all containing medicaments being dispensed.

BACKGROUND TO THE INVENTION

Labelling apparatus for use in medicine or pharmaceutical dispensing systems are known. One susch system is described in United States patent number 9,721,418 B2 in the name of Medavail, Inc., entitled "Vending machine container labelling and dispensing method" discloses a vending machine in communication with a remote station. The vending machine "*delivers labelled containers to a user from storage holding containers of different sizes and shapes and containing different products such as medicaments. A control system is operable to select a specific unlabelled container from among the other containers in storage, and to move the selected unlabelled container to a labelling module where a label is applied after the position of the label and/or the selected unlabelled container are/is just so as to result in the label being applied at a desired position and angular orientation with respect to the selected unlabelled container. The control system is further operable to move the label container to a delivery zone accessible to the user.*"

OBJECT OF THE INVENTION

It is an object of this invention to provide a labelling apparatus and method of the type described above.

SUMMARY OF THE INVENTION

In accordance with this invention there is provided a labelling apparatus comprising a conveyor means having a receiving end for receiving an article to be labelled and a discharge end for discharging the article once labelled, a label applicator for attaching a label to the article and a label securing means for securely forcing the label onto the article.

The article has a curved, uneven, angled or flat surface.

The article is a bottle, box or sachet; alternatively, the article is a container that contains a medicament.

There is provided for the conveyor means to be a continuous conveyor belt extending around rollers at opposite ends of the conveyor means.

The label applicator includes an applicator arm movable between a retracted position in which it receives the label at the free end of the arm and an extended position in which an adhesive side of the label is pushed onto the article.

There is provided for the label securing means to be a resiliently deformable object movable between a position removed from the article to a position in which it is forced onto the label and the article so that it deforms to take the shape of an exposed side of the article to force the label to securely attach to the article.

The object m may be made from foam rubber or is a sponge.

A suction means is movable between an engagement position in which it engages the sachet in a container and a retracted position in which the sachet is attached to the suction means and moved out of the container.

A discard apparatus pushes the container off the conveyor when the suction means is in its retracted position.

The suction means releases the sachet when the suction means is in its retracted position and when the container is removed from the conveyor so that the sachet falls onto the conveyor.

There is provided for the conveyor receiving ended to the operatively underneath a discharge end of a delivery chute for receiving the article on the receiving end of the conveyor.

The discharge end of the conveyor terminates at a dispensing container for discharging the article, once labelled, into the dispensing container.

The dispensing container includes a trapdoor which trapdoor is located in a front cover of a pharmaceutical dispenser unit.

The pharmaceutical dispensing unit also includes a patient interface in the front cover thereof.

The patient interface includes a screen and communication means having a microphone and a speaker, a keypad and a card reader.

The article is moved along the conveyor to operatively underneath the label applicator for attaching a label and then to underneath the label securing means securely forcing the label onto the article.

Alignment means align and article to be labelled on the conveyor means before a label is applied to the article.

A suction device is located above the conveyor means and which suction device includes a suction cup movable onto the article to attached to the article through negative vacuum pressure and to lift the article away from the conveyor means by moving the suction cup away from the conveyor means.

The invention extends to a labelling method comprising the steps of:

- receiving an article to be labelled on a conveyor means;
- moving the article, on the conveyor means, to operatively underneath a label applicator;
- attaching a label, at least partially, to the article;
- forcing, with a label securing means, a major part of the label onto the article.

The invention includes the step of aligning the article on the conveyor means.

There is provided for applying a suction force to the article to lift the article out of a dispensing container or box and to release the suction force from the article to drop the article back onto the conveyor means once the dispensing container or box has been moved off the conveyor means.

There is also provided for a step of forcing an incorrect article, and article having been incorrectly labelled or a dispensing container or box off the side of the conveyor means.

These and other features of the invention are described in more detail below.

BRIEF DESCRIPTION OF THE DRAWINGS

An embodiment of the invention is described below by way of example only and with reference to the drawings in which:

Figure 1 shows a perspective view of a labelling apparatus with a misaligned medicine bottle on a conveyer belt of the labelling apparatus;

Figure 2 shows the same view of the labelling apparatus of figure 1 with the medicine bottle aligned on the conveyer belt;

Figure 3 shows the same view of the apparatus of figures 1 and 2 with the medicine bottle below a label applicator with an arm of the applicator partly extended;

Figure 4 shows the same view of the apparatus of figures 1 to 3 with the label applicator arm abutting the medicine bottle;

Figure 5 shows the same view of the apparatus of figures 1 to 4 with the label applicator arm retracted;

Figure 6 shows the same of the apparatus of figures 1 to 5 with a label applied to the medicine bottle;

Figure 7 shows the same view of the apparatus of figures 1 to 6 with an arm of a sponge movement apparatus partially extended;

Figure 8 shows the same view of the apparatus of figures 1 to 7 with a sponge engaged with the medicine bottle;

Figure 9 shows the same view of the apparatus of figures 1 to 8 with the label attached to the curvature of the medicine bottle;

Figure 10 shows the same view of the dispensing apparatus of figures 1 to 9 with the medicine bottle falling into a dispensing container;

Figure 11 shows a perspective view of a pharmaceutical dispensing unit (PDU);

Figure 12 shows the same view of the apparatus of figures 1 to 10 with a dispensing box having a sachet therein, on the conveyer belt below the label applicator with the label applicator arm extended onto the sachet in the box;

Figure 13 shows the same view of the apparatus of figures 1 to 10 and 12 with the sponge referred to in the description of figure 8 above, engaged with the sachet referred to in the descriptions of figure 12;

Figure 14 shows the same view of the apparatus of figures 1 to 10 and 12 and 13 with a suction cup engaged with the sachet;

Figure 15 shows the same view of the apparatus of figures 1 to 10 and 12 to 14 with a discard plate discarding the dispensing box to the side; and

Figure 16 shows the same view of the apparatus of figures 1 to 10 and 12 to 15 with the sachet referred to in the description of figures 12, 13 and 14 falling into the dispensing container referred to in the description of figure 10.

DETAILED DESCRIPTION OF THE DRAWINGS

With reference to the drawings a labelling apparatus is generally indicated by reference numeral 1.

The labelling apparatus 1 includes a conveyor means for having a receiving end that terminates underneath an outlet of a chute 2 and on opposite discharge end that terminates over a dispensing container 9. The conveyor means is a continuous conveyor belt for located over rollers 5. The rollers 5 are supported between roller support braces 6. The support braces 6 are, in turn, attached to a support platform 7.

The conveyor belt for rotates anticlockwise about the rollers 5 when the apparatus 1 is viewed as shown in the drawings.

In accordance with a 1st example of the invention, the chute discharges a medicine bottle 3 on the receiving end of the conveyor belt 4. As the conveyor belt rotates, the bottle 3 moves in between alignment plates 11. The alignment plates 11 are elongate in the direction of the conveyor belt and face each other from opposing sides of the conveyor belt. An alignment actuator rod 14 is selectively movable into and out of an alignment actuator housing 12 between a retracted position and an extended position. An operatively inner end of the alignment actuator rod 14 is attached to a rear surface of each alignment plate so that movement of the alignment actuator rod 14 moves the plate from a side of the conveyor belt towards a centre thereof. Alignment movement support rods are attached on either side of the alignment actuator rod 14 to the alignment plates and are movable together with the alignment plates in alignment movement support blocks 13. This supports the alignment plates so that they do not rotates about their connection with the alignment actuator rod or so that they do not cause rotation of the alignment actuator rod with in the alignment actuator housing.

The arrows 28 shown in figure 3 show the direction of movement of the plate 11 from their retracted to their extended positions.

A further device, in the form of a label applicator 15, is next in line in the direction of movement of the top portion of the conveyor belt. The label applicator 15 includes a label applicator arm that receives, in use, a label from a label roll and a printer (not shown) on a label applicator plate 17, at a free end of the label applicator arm 16.

The label applicator arm is movable from a retracted position in which it locates mostly with in the label applicator 15 to an extended position as shown in figure 4.

The next device, in the direction of movement of the top section of the conveyor belt, is a sponge movement apparatus supported in a support beam 26 the sponge movement apparatus includes a sponge support plate 24 at the end of a sponge arm. The sponge arm 27 is movable from a retracted position in which it allows the movement of articles freely along the conveyor belt to extended position in which a sponge 25 on the operatively underside of the sponge support plate 24 is pressed onto an article, such as the medicine bottle 3, to be labelled.

A further device is supported on the beam 26, further down in the direction of movement of the upper portion of the conveyor belt. This device is a suction apparatus 38 having a suction on 39 movable between a retracted position in which it allows free, unimpeded movement of articles on the conveyor belt and an extended position in which a suction cup or suction means 37 at a free end of the suction arm Duchess an article such as a plastics material sachet 36 and engages it for applying a vacuum through the suction cup and up the arm of the suction apparatus 38.

A still further device in the form discard the wise includes a discard plate 19 located underneath to the side of the suction device. The discard device includes a discard plate 19 which is elongate and orientated in the direction of the conveyor belt, coaxially there with and to the side of the conveyor belt so that, in a retracted position it allows free movement of articles on the conveyor belt. The discard support rod 21 is attached behind the discard plate and discard plate movement support rods 33 located on either side of the discard

supporter rod and on movable in discard support blocks 20 to ensure steady movement and prevent rotation of the plate 19 when the discard support rod 28 is extended from a retracted position to an extended position in which the plate has moved across the conveyor belt towards the discard shoot 8 thus to push an article moving or, in the case of the conveyor belt being at standstill, off the conveyor belt and onto the discard shoot 8 from where it can be discarded into a discard receptacle.

The dispensing container 9 is located and attached to a pharmaceutical dispenser unit front cover 10. The dispensing container can be accessed through a trapdoor from an operatively front side of the pharmaceutical dispensing unit (PDU) as is described further below.

The front cover 10 of the PDU includes a user interface and communication means in the form of a screen 31 a keyboard 32 a card reader slot 34 a speaker 33 and a microphone (not shown). The flat door 30 is operable from a front side of the PDU and is normally locked. The flat door is unlocked and access to the dispensing container is allowed once a patient has been positively identified and once it is confirmed that the correct medicine has been dispensed into the dispensing container.

In a 2nd example, and as shown in figure 12, a sachet 36 moves along the conveyor belt in a sachet dispensing box 35 which has been dispensed by dropping the dispensing box 35 down the chute so that it lands with its open end facing upwards on the conveyor belt and then moves along the conveyor belt as described in more detail below.

In in use, and with reference 1st to figure 1, a bottle 3 is deposited from the chute onto the receiving end of the conveyor belt. The bottle will not necessarily align lengthwise on the conveyor belt or transverse to the conveyor belt. To ensure proper alignment of the bottle the alignment plate 11 move closer together and force the bottle alignment as is shown in figure 2. The conveyor belt may include a centrally extending recess (not shown) to support the bottle and to prevent it from rolling to the size of the conveyor belt. As shown in figure 3, the bottle is now moved to underneath the label applicator and a label 29 having an adhesive operatively underside is pushed onto the bottom as is shown in figure 4. In figure 5, the label applicator has moved to its retracted position and the label is attached to the bottle albeit only at the central portion of the label opposite ends of the label have not been pushed down onto the curvature of the bottle.

As is shown in figure 6, the bottle now moves to a position underneath the sponge 25 and the device that operates the sponge pushes the sponge downwards as is shown in figure 7 and onto, as is shown in figure 8, the bottle. This movement forces the sponge, which is of course resiliently deformable to deform according to the shape of the curvature of the bottle and it causes the label to be forced properly onto the curvature of the bottle.

At this point, if a barcode or other reader such as a camera having character recognition facilities, the discard plate 19 may be actuated to discard the bottle down the discard shoot 8 if it is determined that the incorrect medicine or dosage is about to be dispensed. If however it is confirmed that the correct medicine is about to be dispensed the bottle now moves further along the conveyor belt from where it falls from the discharge end of the conveyor belt into the dispensing container where it is ready for collection by a patient once the patient has performed the necessary actions at the front end of the PDU. This process of dispensing the medicine is known and the medicine will only be dispensed once the patient has been positively identified and other requirements such as payment for the medicine is confirmed. In the dispensing process, access to a pharmacist may also be established through use of the communication means of the PDU which may even include a video link.

As shown in figure 12, a sachet made of plastics material and including medicament is dispensed inside a sachet dispensing container or box 35, down the chute 2, onto the receiving end of the conveyor belt. The dispensing box 35 may or may not be orientated on the chute using the alignment plates 11. The alignment otherwise of the box will depend on the size of the label to be adhered to the sachet. Once the label is attached with the label attachment means and once the sponge has been activated to ensure proper adherents of the label to the uneven surface (due to the medicament inside of the sachet) of the sachet by pushing down on the sachet and label and deforming to conform with the uneven surface of the sachet, the suction cup is moved onto the sachet from where vacuum means 3 suction cup and suction arm ensure that the sachet remains attached to the suction cup as the suction cup is moved upwards away from the dispensing box 35. Once the sachets moved out of the box, the discard plate 19 is moved forward across the conveyor belt to push the dispensing box 35 to the side and onto the dispensing chute 8. The box does travels down the inclined dispensing chute 8 into a collection receptacle from where it may be reused.

Sensors in the form of barcode readers and all cameras having character recognition software may be used at various intervals along the path of travel of the article to be labelled to ensure that the correct medicament is dispensed, that the and the like. If the incorrect medicament is about to be dispensed or if the incorrect information is displayed on the label, the discard plate 19 will be activated to move any such article off the conveyor belt and down the discard chute 8.

It is envisaged that the invention described herein will be convenient to use in that sachets may be dispensed using open topped rectangular boxes, suction or vacuum means and a discard means for discarding the boxes from the conveyor belt. Once the box has been moved off the conveyor belt, the vacuum force is released so that the sachet drops back onto the conveyor belt from where it moves to the discharge end of the conveyor belt and falls into the dispensing container.

Labels are also securely attached to articles such as boxes, sachets having uneven surfaces and bottles having curved surfaces through use of the resiliently deformable sponge that, once a label is partially attached to an article, pushes the label further onto the article and such articles uneven or curved or angled surface. In the case of a box having a flat surface, the sponge is also useful to apply additional pressure which may not have been sufficiently applied by the label applicator.

It will be appreciated by those skilled in the art that the invention is not limited to the precise details as described herein. For example, labels may be attached to other types of packaging instead of bottles and sachets as described herein. For example, labels may also be attached to cardboard and other material boxes and the like.

CLAIMS

1. A labelling apparatus comprising a conveyor means having a receiving end for receiving an article to be labelled and a discharge end for discharging the article once labelled, a label applicator for attaching a label to the article and a label securing means for securely forcing the label onto the article.
2. An apparatus as claimed in claim 1 in which the article has a curved, uneven, angled or flat surface.
3. An apparatus as claimed in any one of the preceding claims in which the article is a bottle, box or sachet.
4. An apparatus as claimed in any one of the preceding claims in which the article is a container that contains a medicament.
5. An apparatus as claimed in any one of the preceding claims in which the conveyor means is a continuous conveyor belt extending around rollers at opposite ends of the conveyor means.
6. An apparatus as claimed in any one of the preceding claims in which the label applicator includes an applicator arm movable between a retracted position in which it receives the label at the free end of the arm and an extended position in which an adhesive side of the label is pushed onto the article.
7. An apparatus as claimed in any one of the preceding claims in which the label securing means is a resiliently deformable object movable between a position removed from the article to a position in which it is forced onto the label and the article so that it deforms to take the shape of an exposed side of the article to force the label to securely attach to the article.
8. An apparatus as claimed in claim 7 in which the object is made from foam rubber or is a sponge.
9. An apparatus as claimed in any one of the preceding claims in which a suction means is movable between an engagement position in which it engages the sachet in a container and a retracted position in which the sachet is attached to the suction means and moved out of the container.
10. An apparatus as claimed in claim 9 in which a discard apparatus pushes the container off the conveyor when the suction means is in its retracted position.
11. An apparatus as claimed in any one of claims 9 or 10 in which the suction means releases the sachet when the suction means is in its retracted position and when the container is removed from the conveyor so that the sachet falls onto the conveyor.

12. An apparatus as claimed in any one of the preceding claims in which the conveyor receiving in its operatively underneath a discharge end of a delivery chute for receiving the article on the receiving end of the conveyor.

13. An apparatus as claimed in any one of the preceding claims in which the discharge end of the conveyor terminates at a dispensing container for discharging the article, once labelled, into the dispensing container.

14. An apparatus as claimed in claim 13 in which the dispensing container includes a trapdoor which trapdoor is located in a front cover of a pharmaceutical dispenser unit.

15. An apparatus as claimed in claim 14 in which the pharmaceutical dispensing unit also includes a patient interface in the front cover thereof.

16. An apparatus as claimed in claim 15 in which the patient interface includes a screen and communication means having a microphone and a speaker, a keypad and a card reader.

17. An apparatus as claimed in any one of the preceding claims in which the article is moved along the conveyor to operatively underneath the label applicator for attaching a label and then to underneath the label securing means securely forcing the label onto the article.

18. An apparatus as claimed in any one of the preceding claims in which alignment means align and article to be labelled on the conveyor means before a label is applied to the article.

19. An apparatus as claimed in any one of the preceding claims in which a suction device is located above the conveyor means and which suction device includes a suction cup movable onto the article to attached to the article through negative vacuum pressure and to lift the article away from the conveyor means by moving the suction cup away from the conveyor means.

20. A labelling method comprising the steps of:

- receiving an article to be labelled on a conveyor means;
- moving the article, on the conveyor means, to operatively underneath a label applicator;
- attaching a label, at least partially, to the article;
- forcing, with a label securing means, a major part of the label onto the article.

21. A method as claimed in claim 20 in which the method includes the step of aligning the article on the conveyor means.

22. A method as claimed in any one of claims 20 to 21 in which the method includes applying a suction force to the article to lift the article out of a dispensing container or box and to release the suction

force from the article to drop the article back onto the conveyor means once the dispensing container or box has been moved off the conveyor means.

23. A method as claimed in any one of claims 20 to 22 including the step of forcing an incorrect article, and article having been incorrectly labelled or a dispensing container or box off the side of the conveyor means.

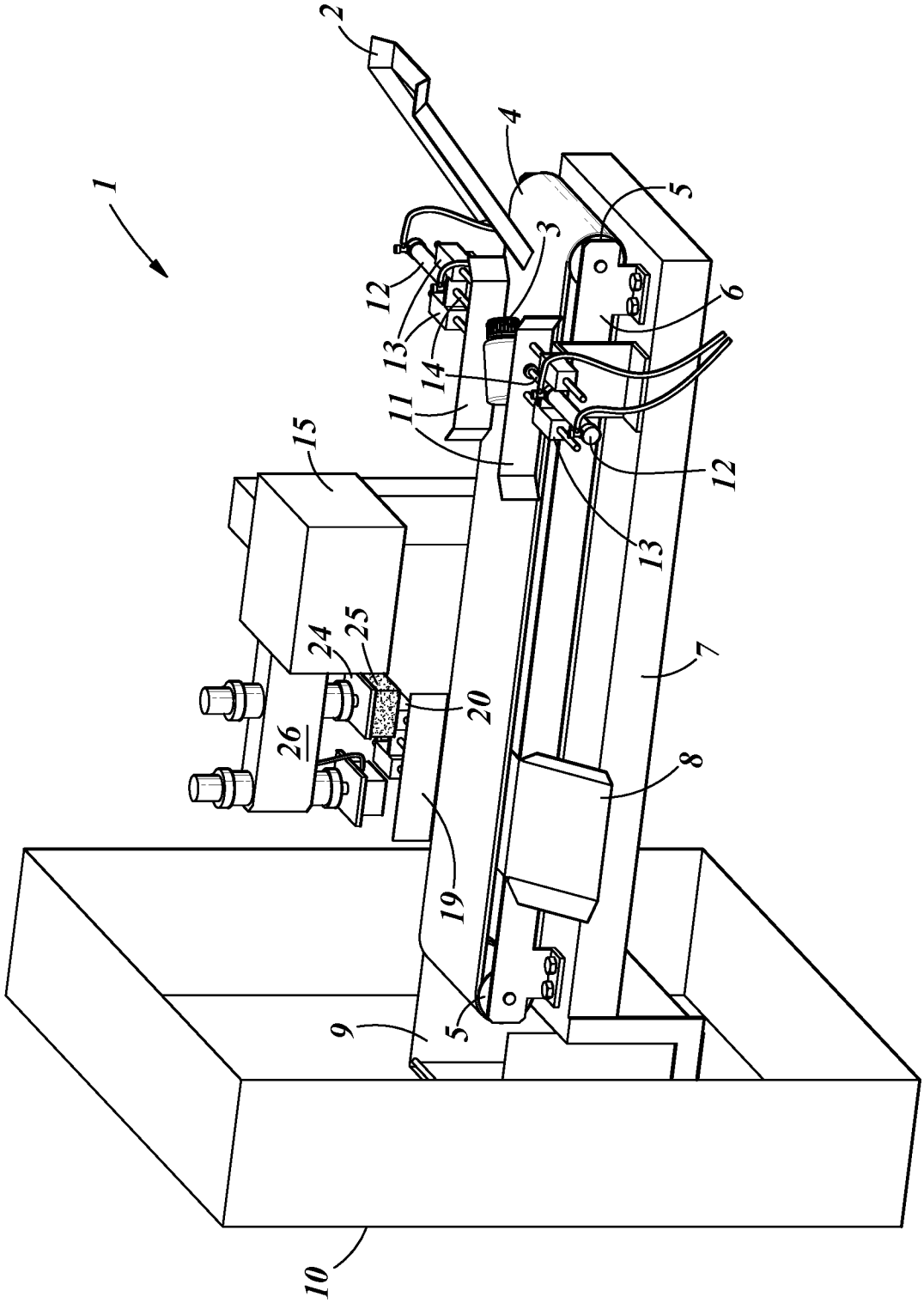

FIGURE 1

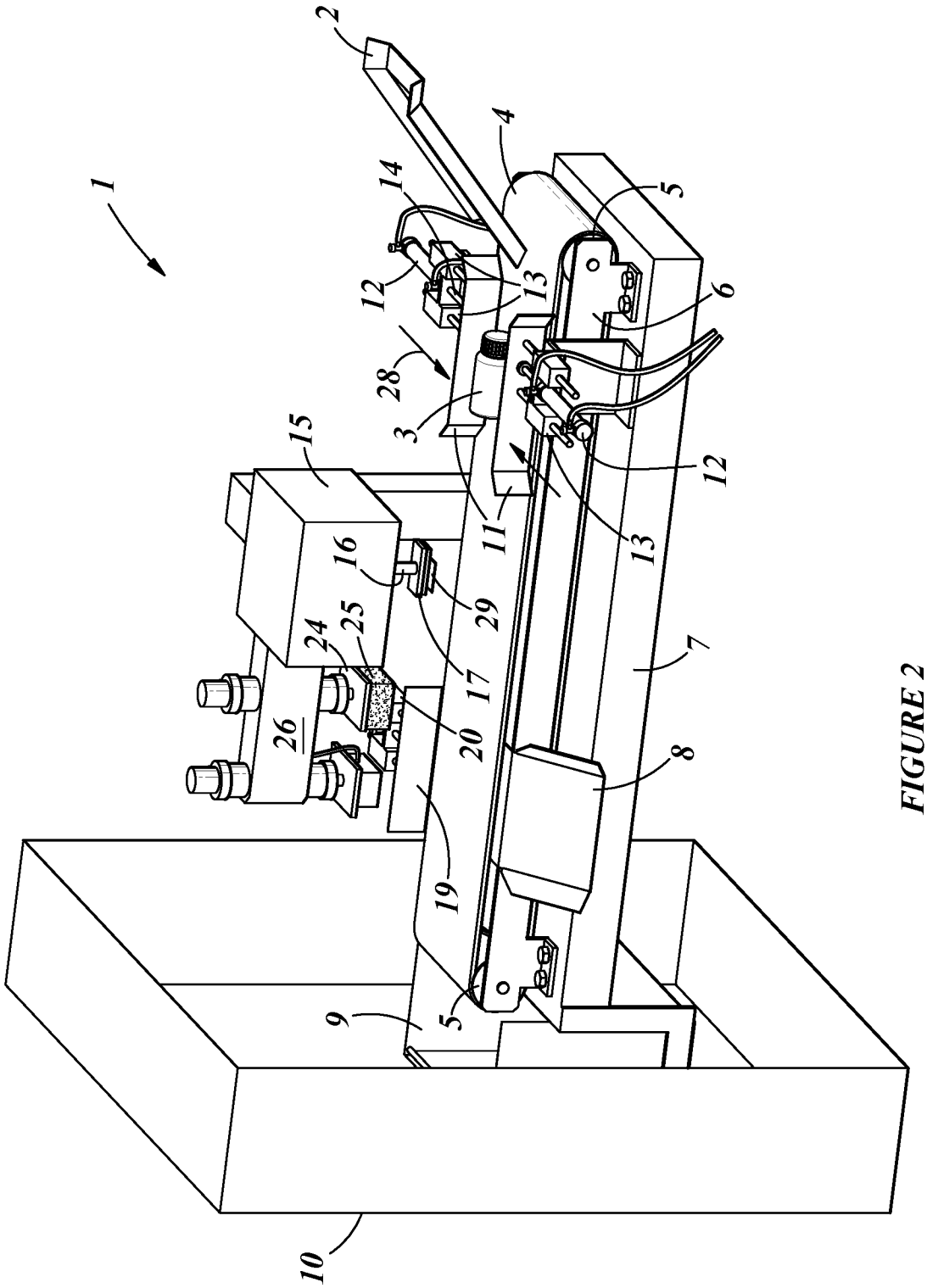

FIGURE 2

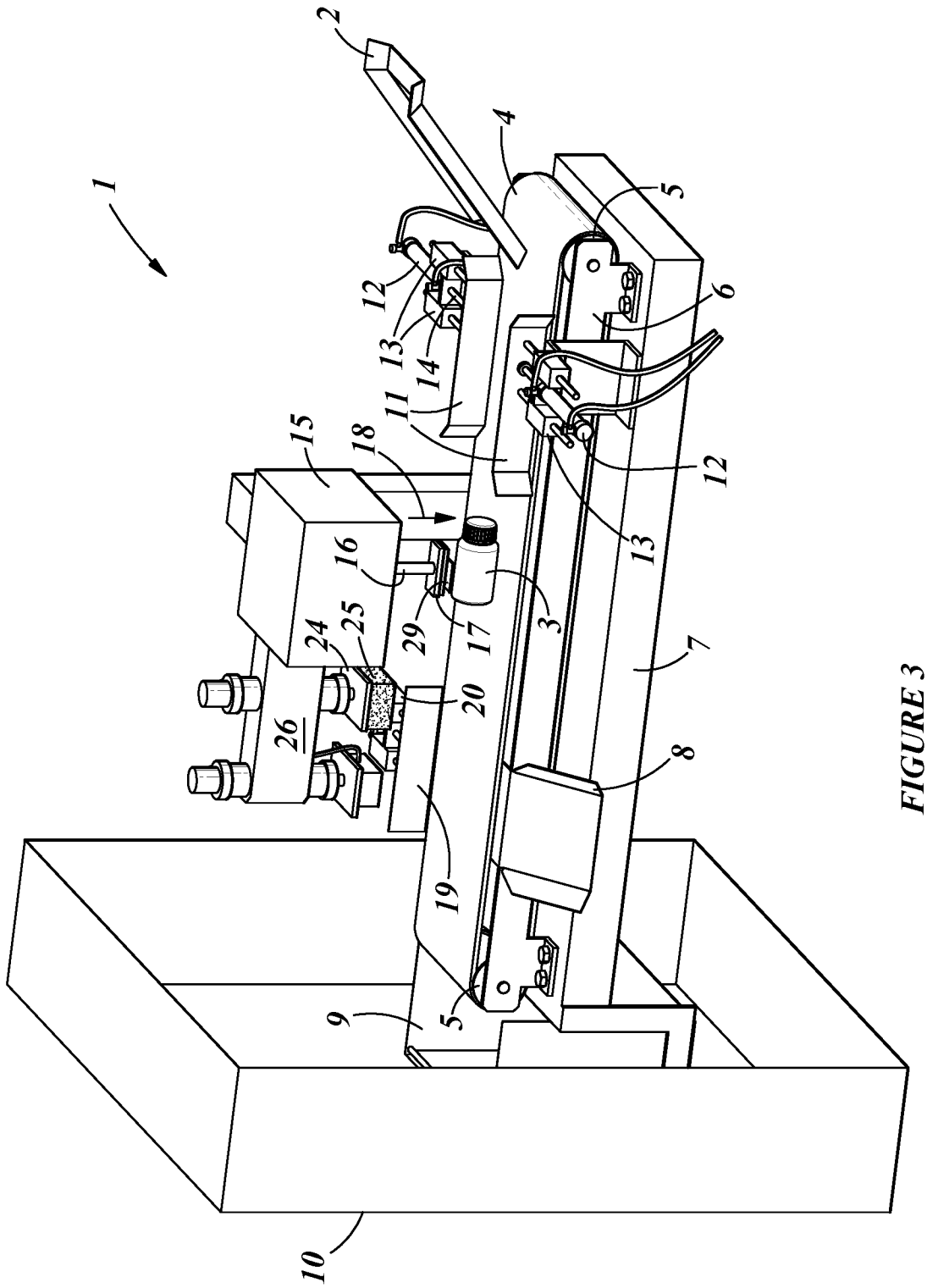

FIGURE 3

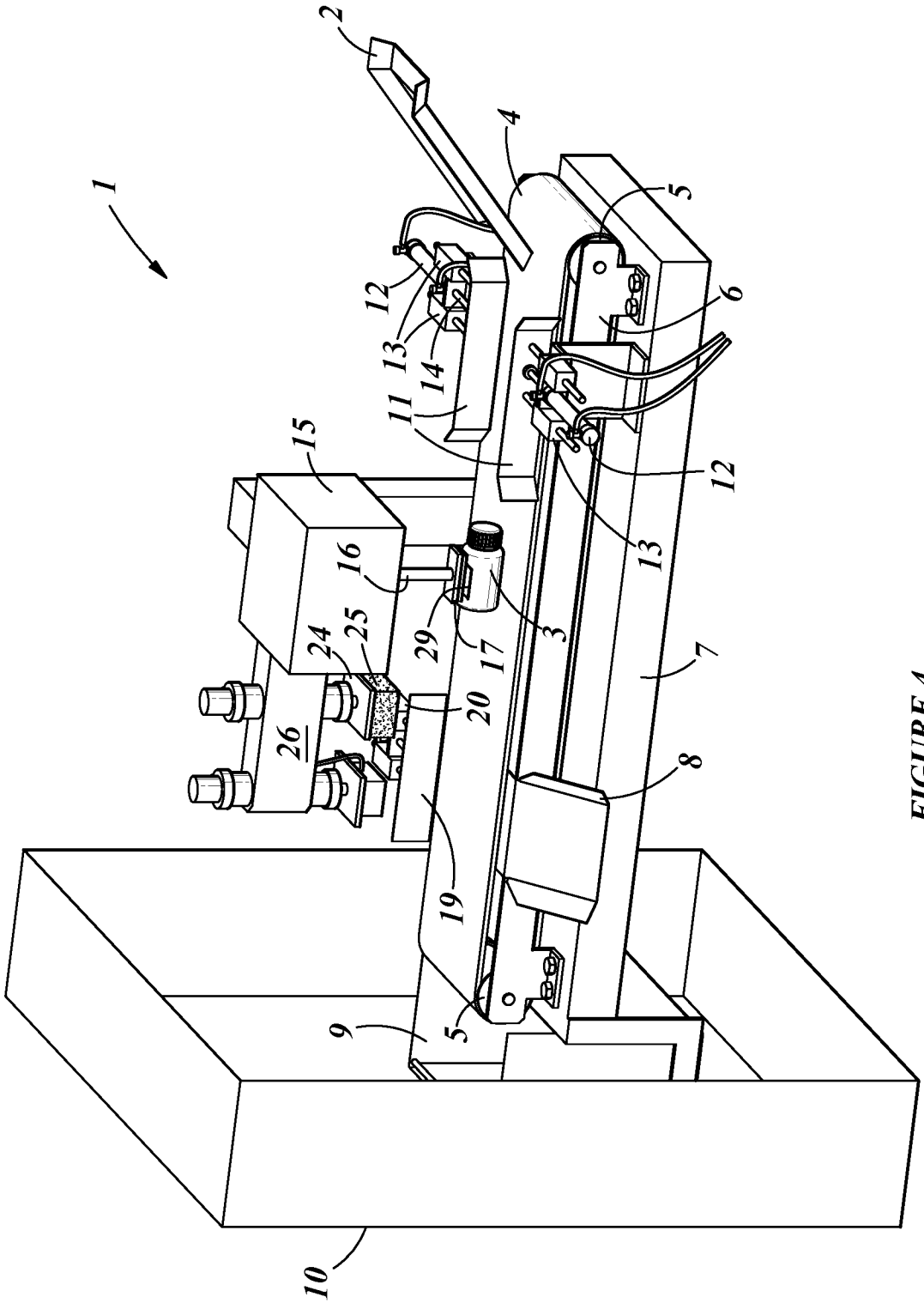

FIGURE 4

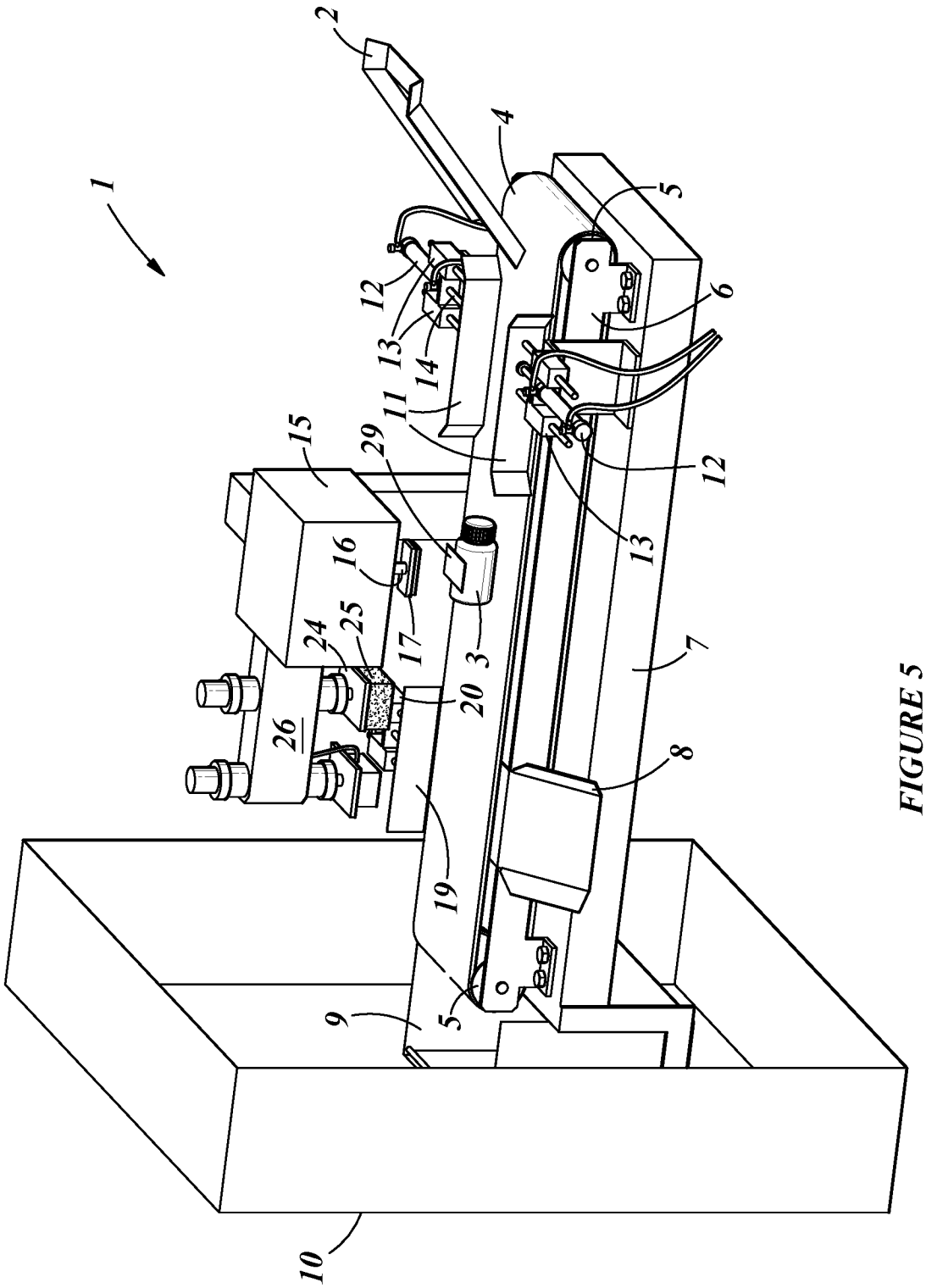

FIGURE 5

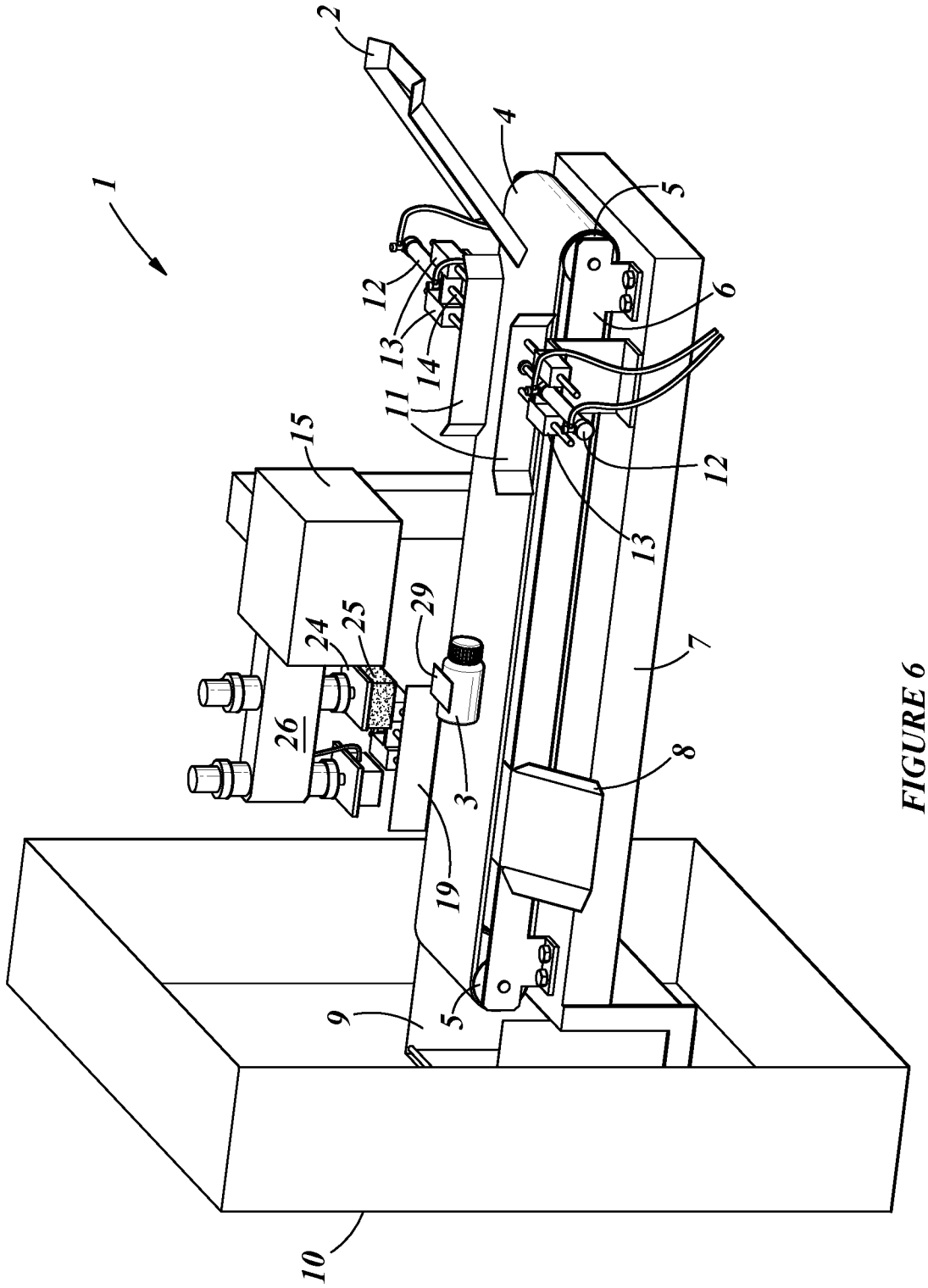

FIGURE 6

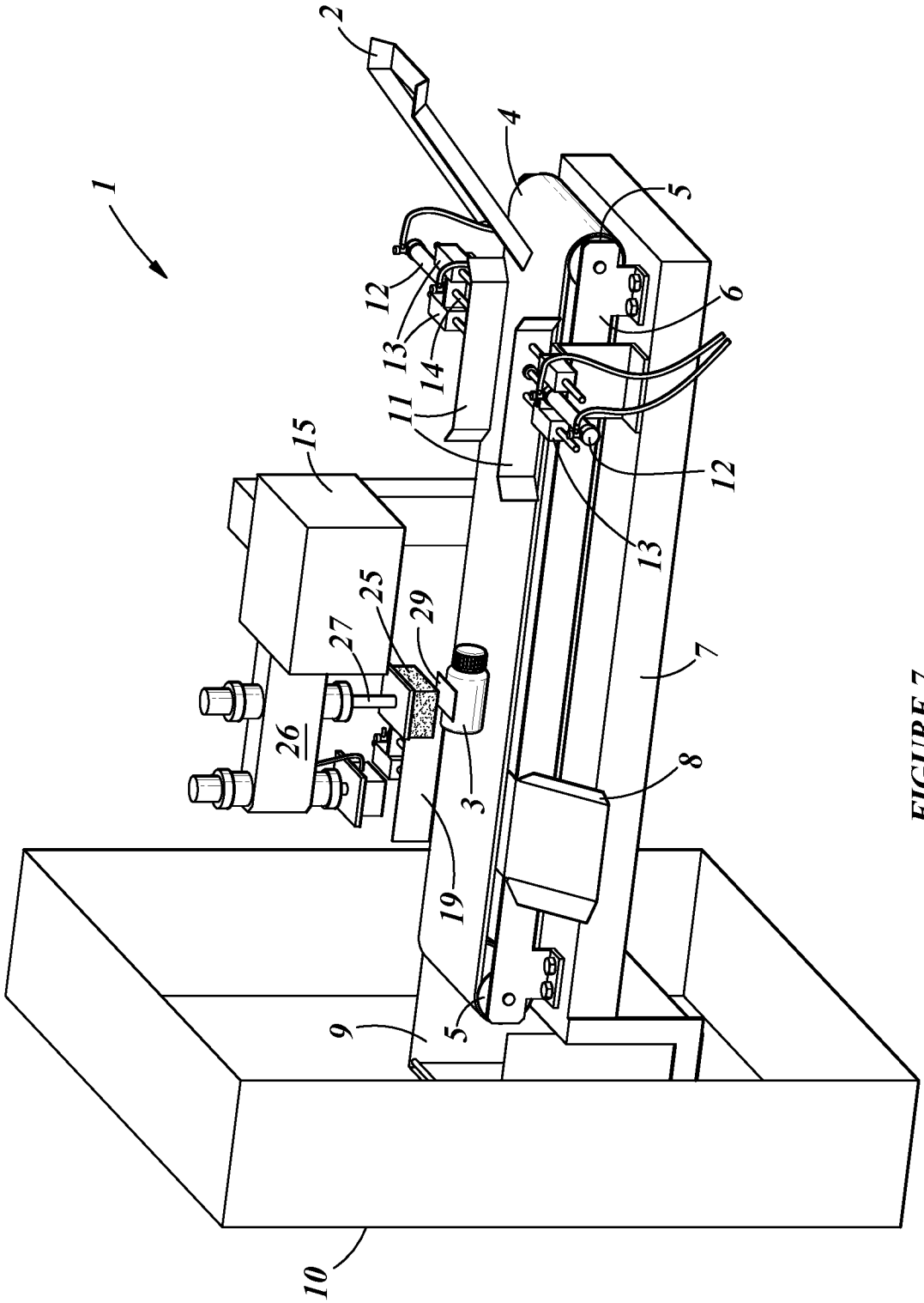

FIGURE 7

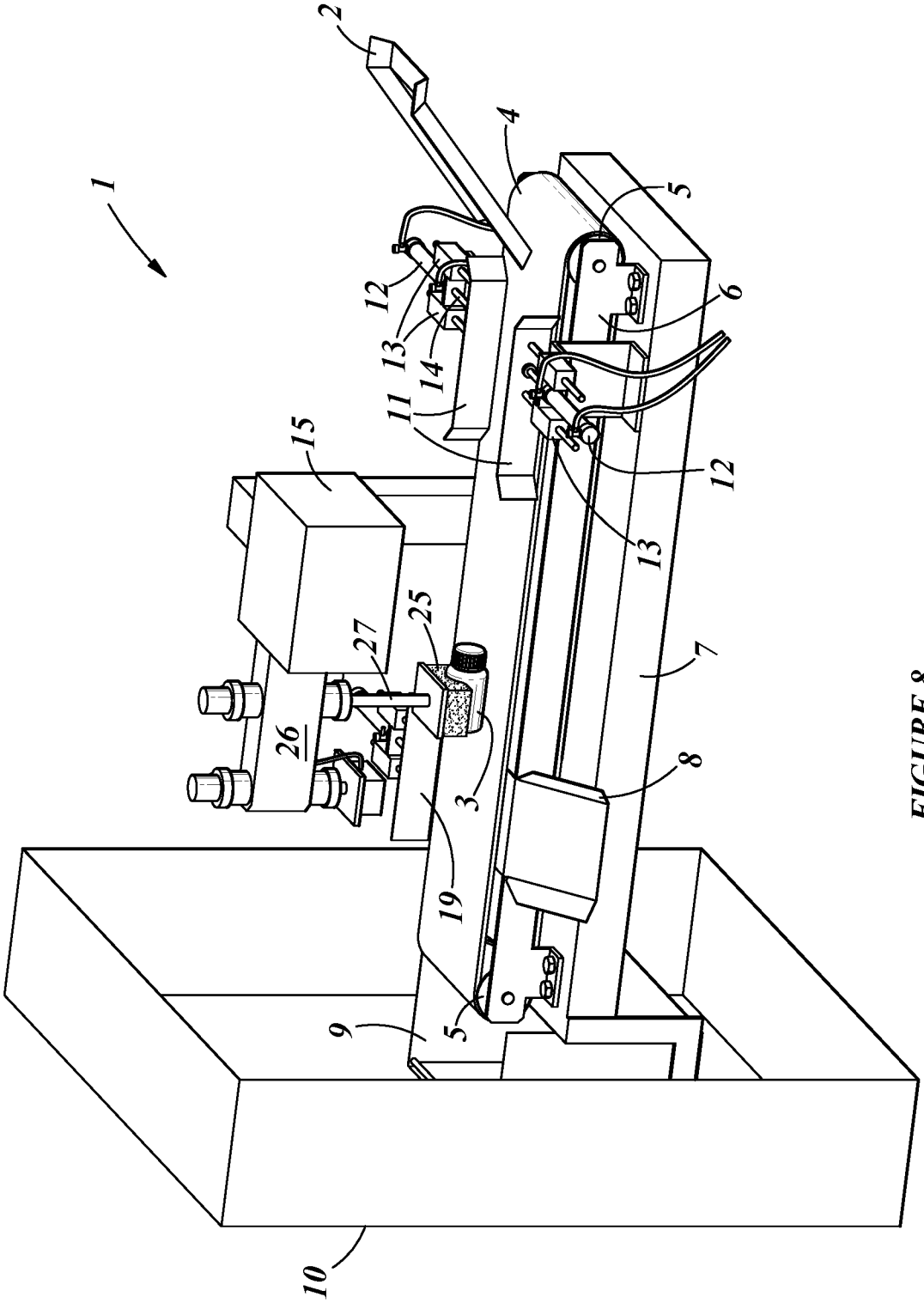

FIGURE 8

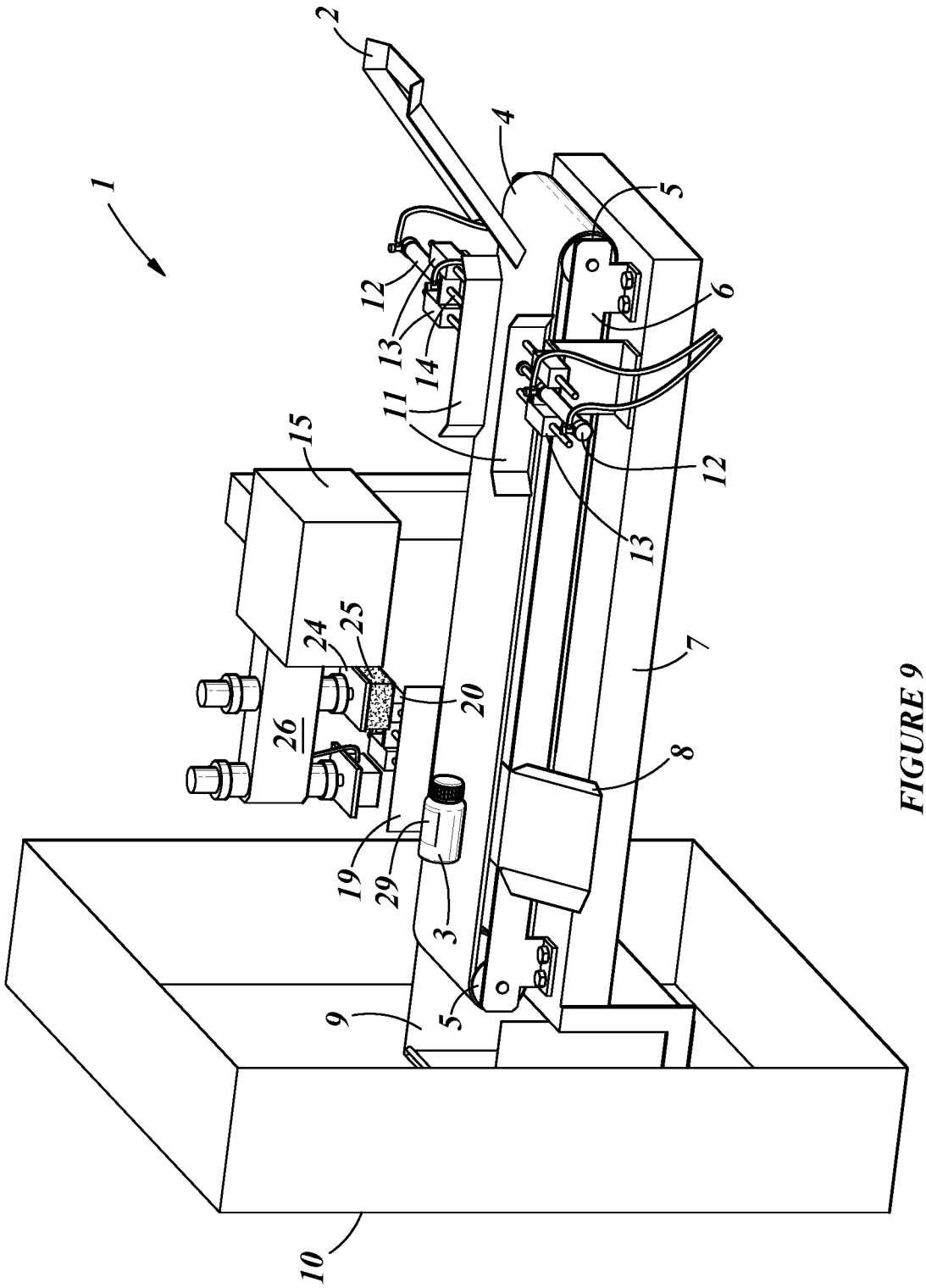

FIGURE 9

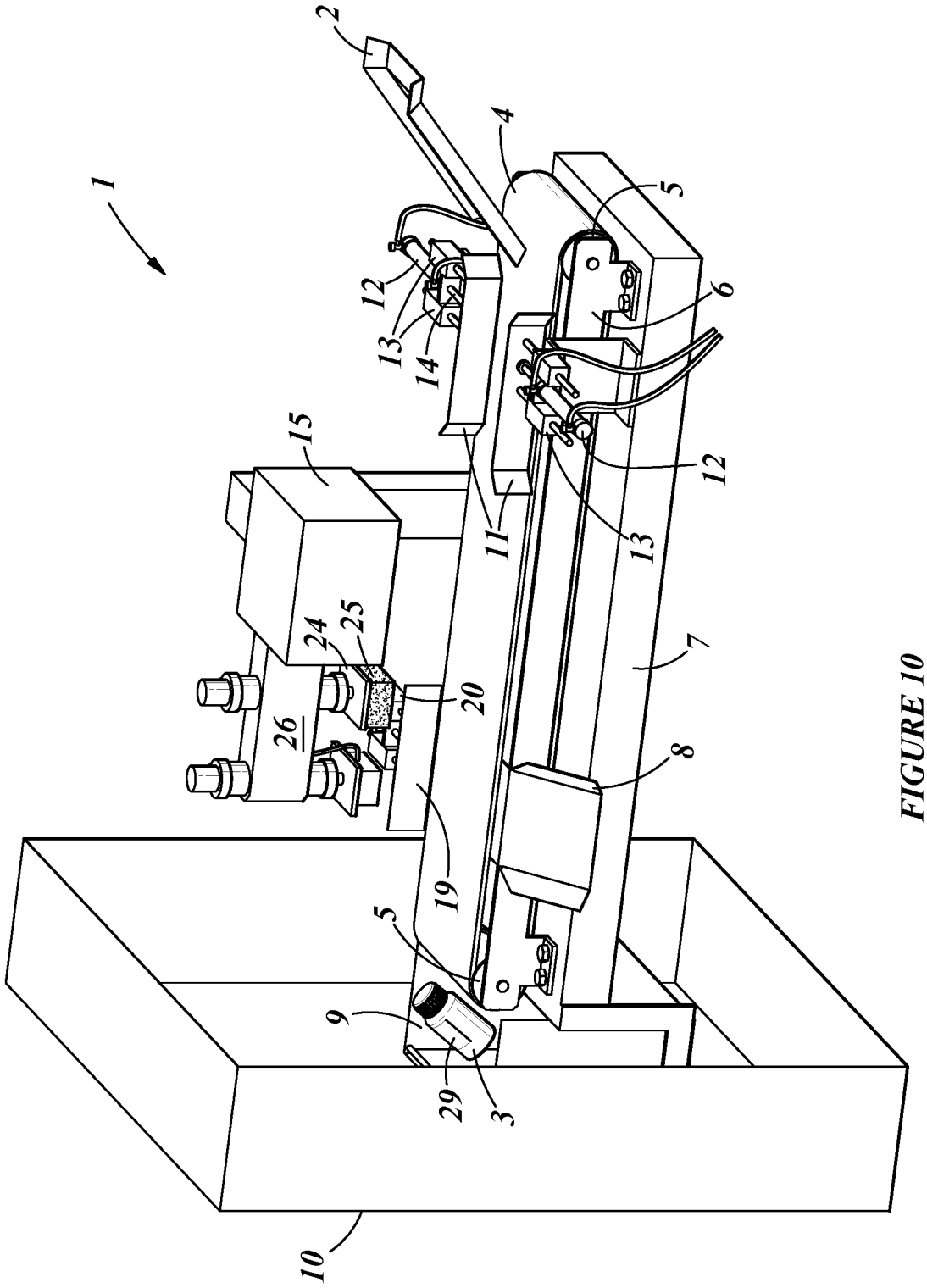

FIGURE 10

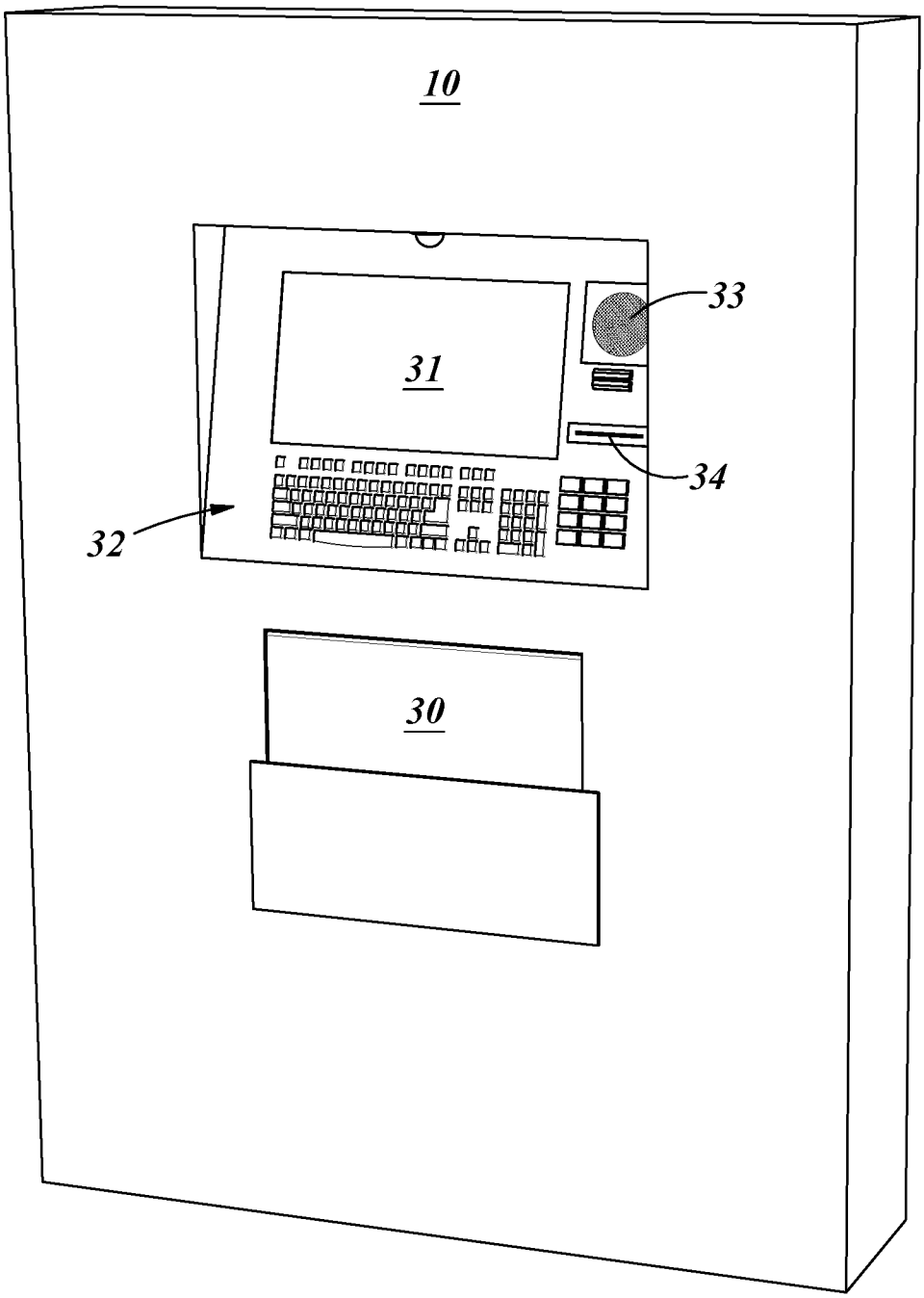

FIGURE 11

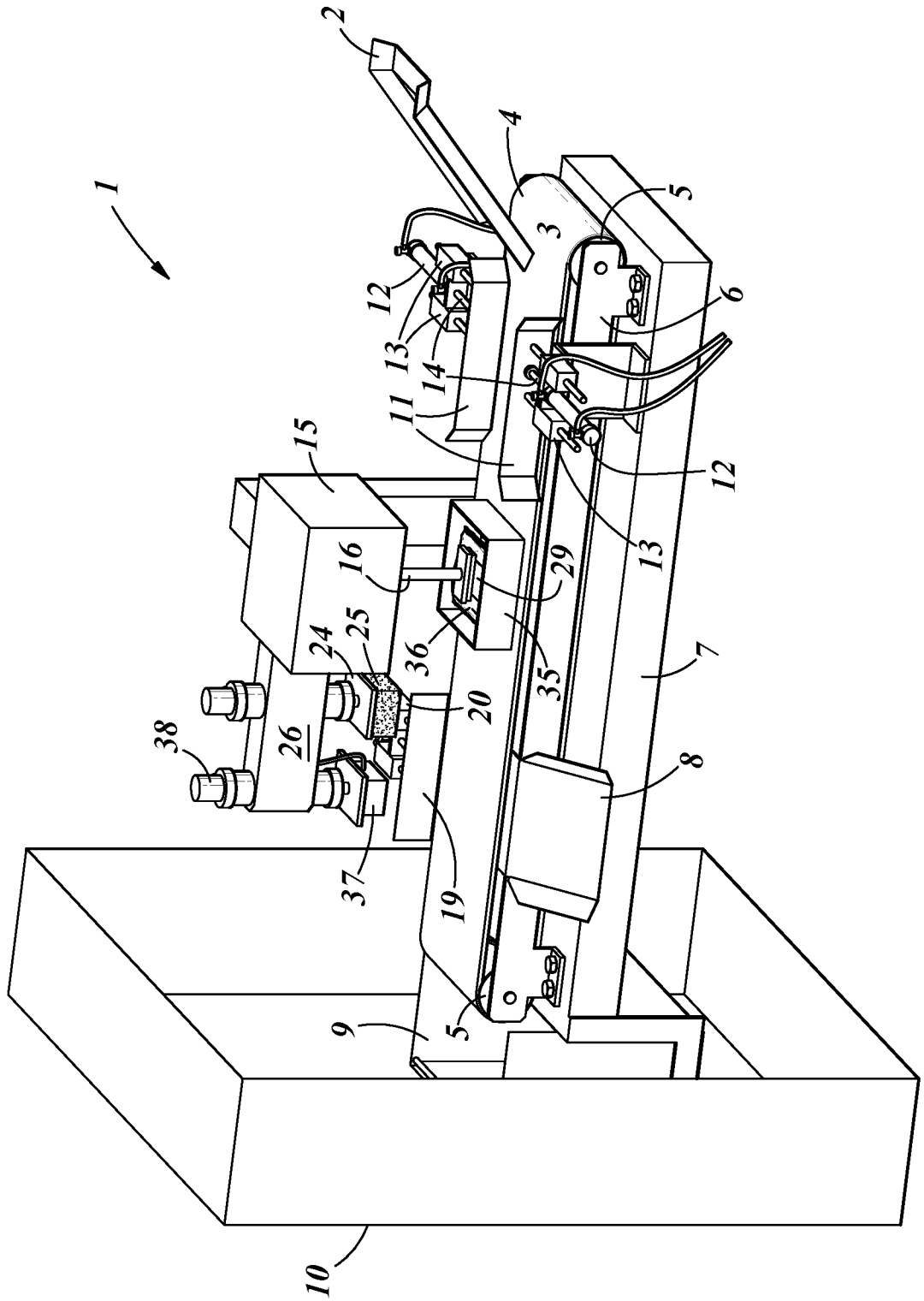

FIGURE 12

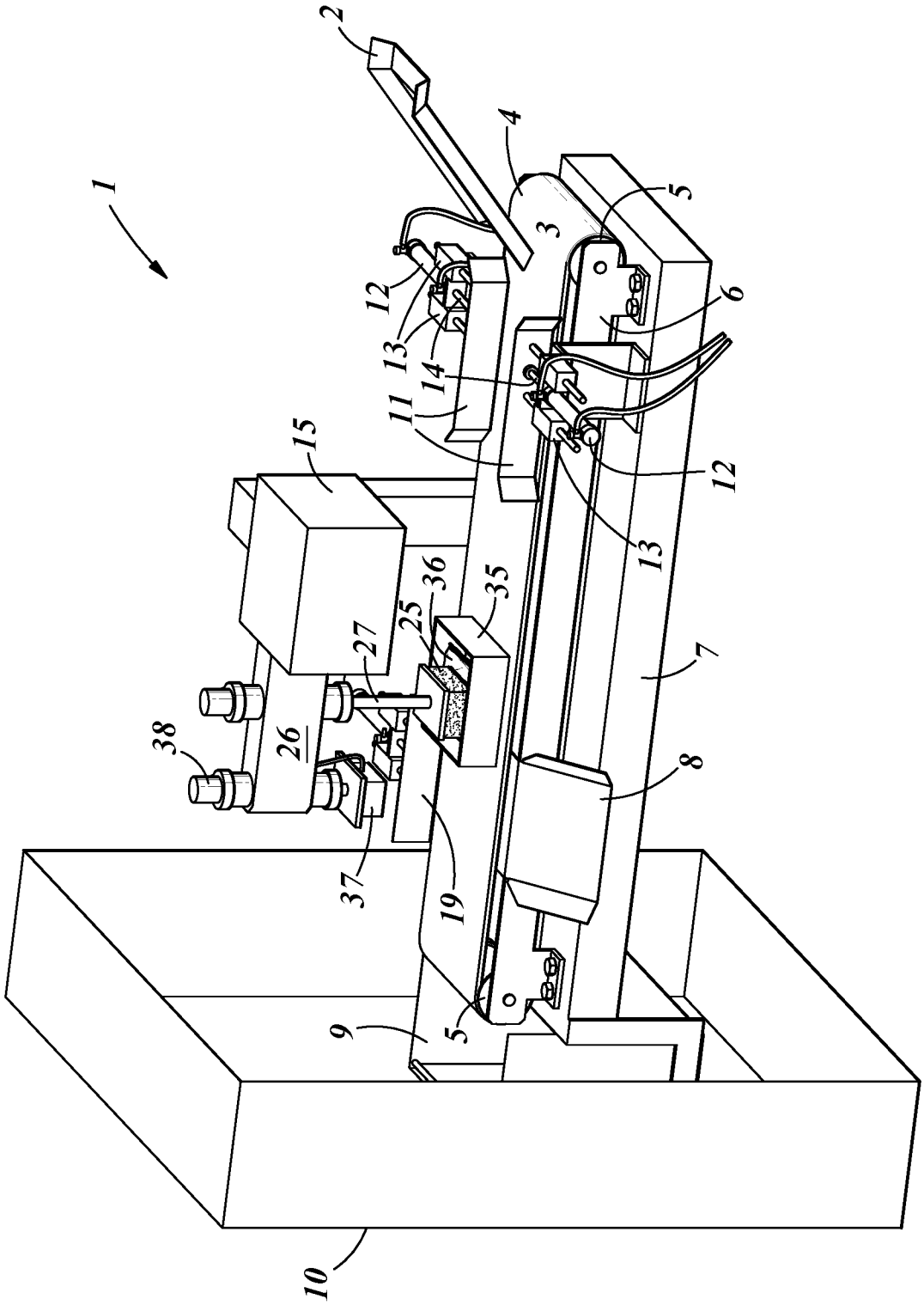

FIGURE 13

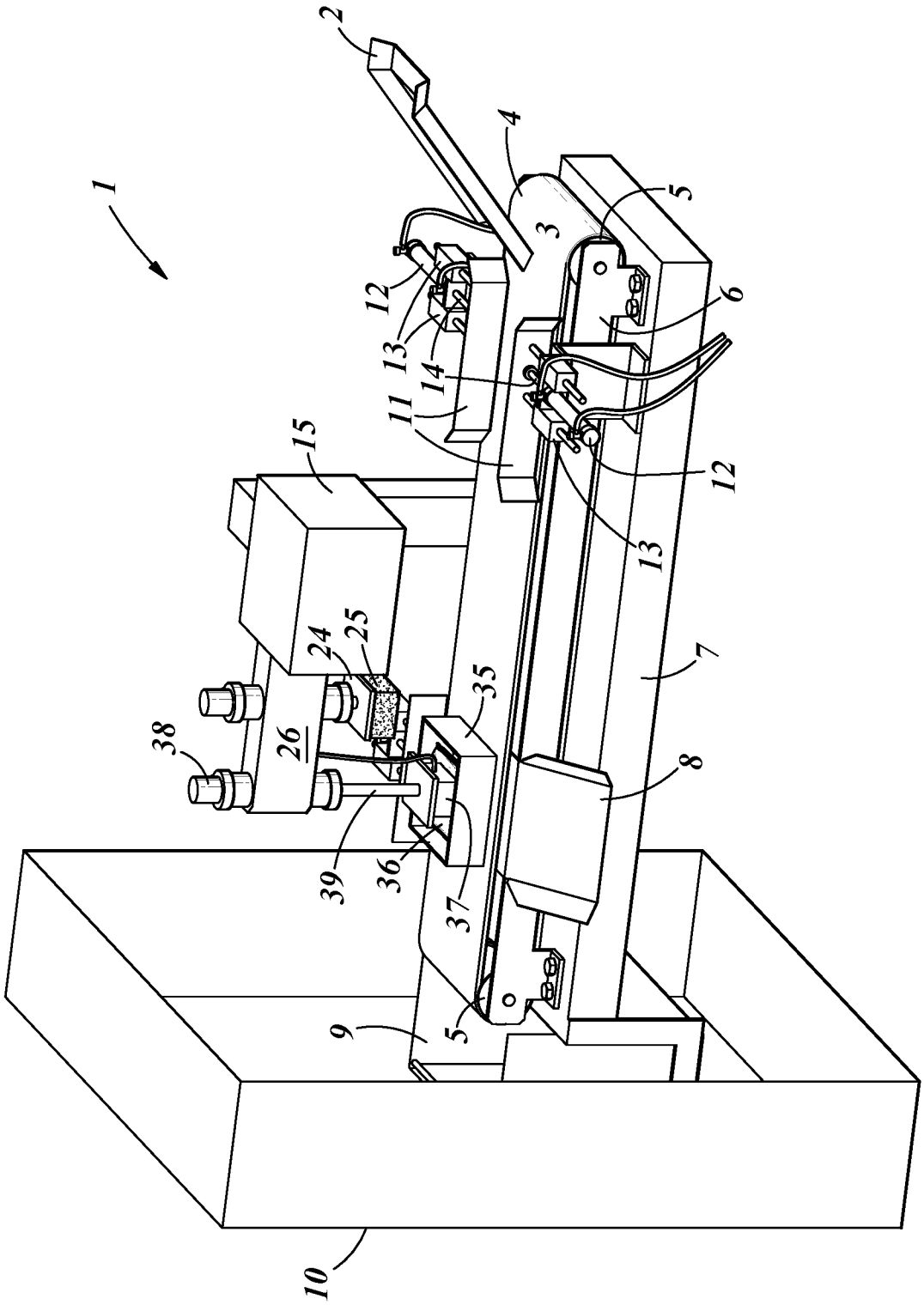

FIGURE 14

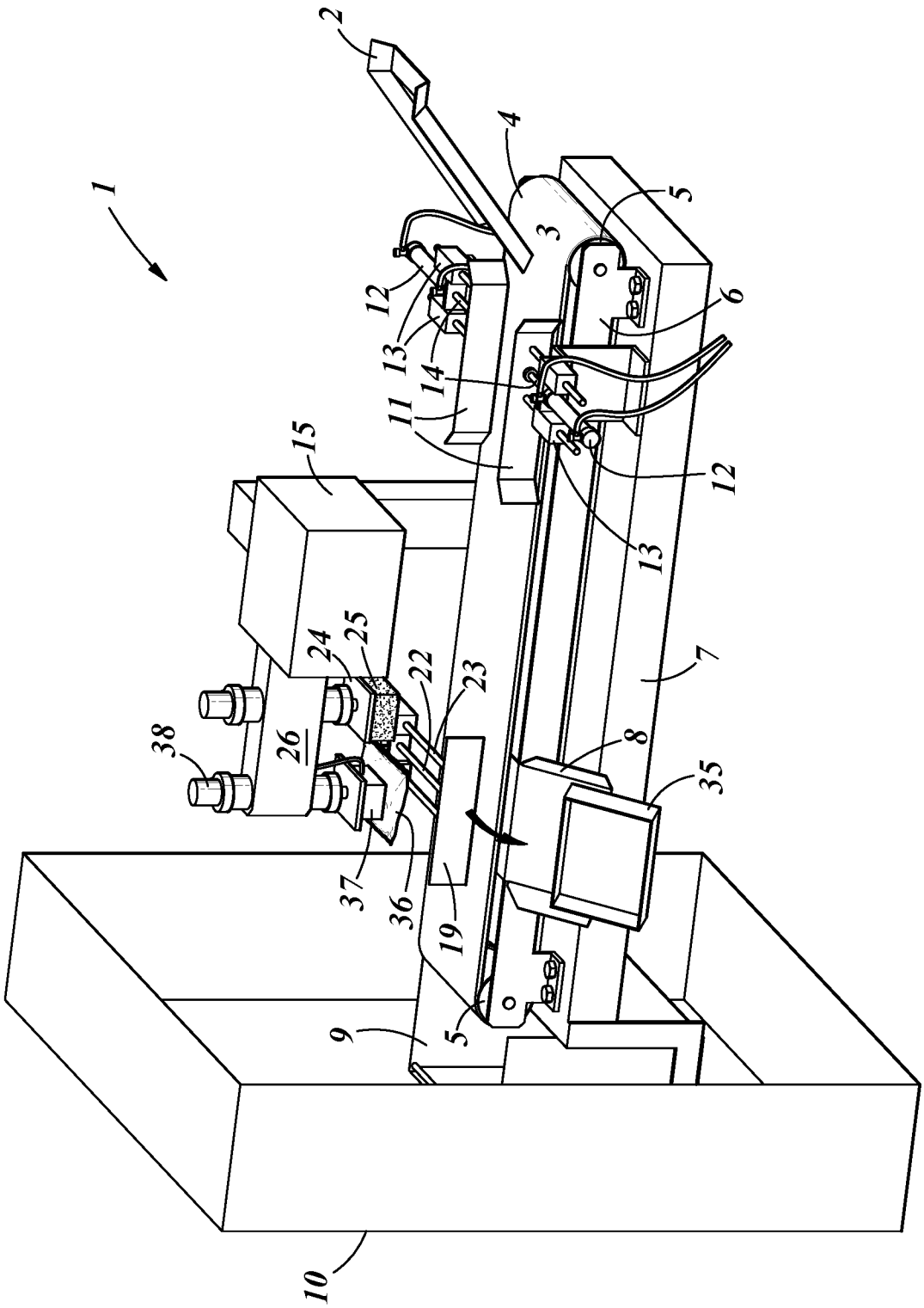

FIGURE 15

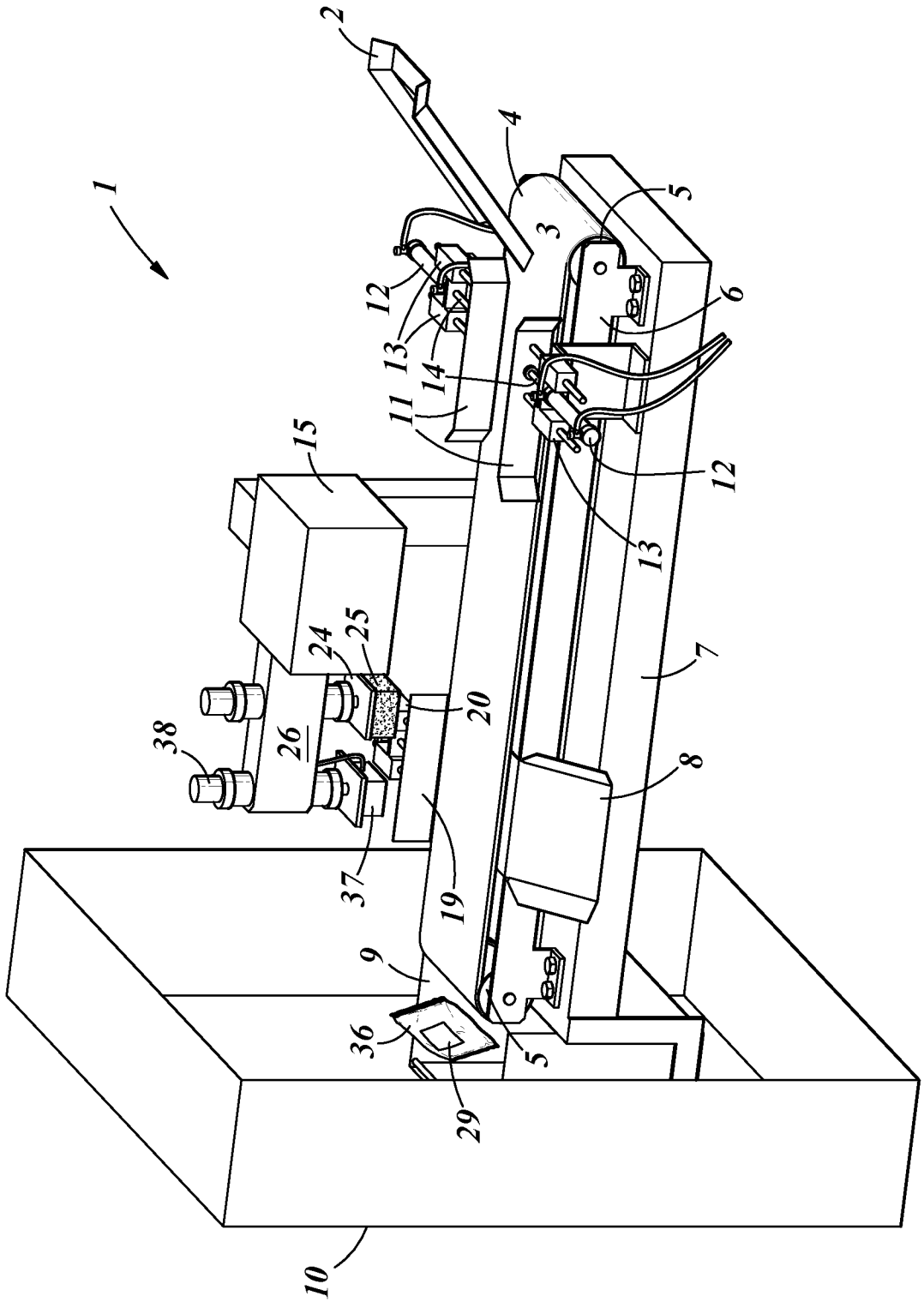

FIGURE 16

INTERNATIONAL SEARCH REPORT

International application No
PCT/IB2018/055308

A. CLASSIFICATION OF SUBJECT MATTER
INV. B65C1/02 B65C3/10
ADD. B65G47/82 B65G47/91

According to International Patent Classification (IPC) or to both national classification and IPC

B. FIELDS SEARCHED

Minimum documentation searched (classification system followed by classification symbols)
B65C B65G

Documentation searched other than minimum documentation to the extent that such documents are included in the fields searched

Electronic data base consulted during the international search (name of data base and, where practicable, search terms used)
EPO-Internal, WPI Data

C. DOCUMENTS CONSIDERED TO BE RELEVANT

Category*	Citation of document, with indication, where appropriate, of the relevant passages	Relevant to claim No.
X	US 4 321 103 A (LINDSTROM JOHN W ET AL) 23 March 1982 (1982-03-23) figures 1-3 column 1, line 62 - column 4, line 44 -----	1-23
X	US 6 155 322 A (LANDAN DANIEL A [US] ET AL) 5 December 2000 (2000-12-05) figures 1-7 column 3, line 42 - column 7, line 65 -----	1-23
X	EP 0 608 296 A1 (BIZERBA GMBH & CO KG [DE]) 3 August 1994 (1994-08-03) figures 1-15 column 3, line 46 - column 7, line 48 -----	1-23

☐ Further documents are listed in the continuation of Box C.

☒ See patent family annex.

* Special categories of cited documents :

"A" document defining the general state of the art which is not considered to be of particular relevance

"E" earlier application or patent but published on or after the international filing date

"L" document which may throw doubts on priority claim(s) or which is cited to establish the publication date of another citation or other special reason (as specified)

"O" document referring to an oral disclosure, use, exhibition or other means

"P" document published prior to the international filing date but later than the priority date claimed

"T" later document published after the international filing date or priority date and not in conflict with the application but cited to understand the principle or theory underlying the invention

"X" document of particular relevance; the claimed invention cannot be considered novel or cannot be considered to involve an inventive step when the document is taken alone

"Y" document of particular relevance; the claimed invention cannot be considered to involve an inventive step when the document is combined with one or more other such documents, such combination being obvious to a person skilled in the art

"&" document member of the same patent family

Date of the actual completion of the international search	Date of mailing of the international search report
20 December 2018	09/01/2019

Name and mailing address of the ISA/	Authorized officer
European Patent Office, P.B. 5818 Patentlaan 2 NL - 2280 HV Rijswijk Tel. (+31-70) 340-2040, Fax: (+31-70) 340-3016	Pardo Torre, Ignacio

INTERNATIONAL SEARCH REPORT

International application No.
PCT/IB2018/055308

Box No. II Observations where certain claims were found unsearchable (Continuation of item 2 of first sheet)

This international search report has not been established in respect of certain claims under Article 17(2)(a) for the following reasons:

1. ☐ Claims Nos.:
because they relate to subject matter not required to be searched by this Authority, namely:

2. ☒ Claims Nos.: 1-23(partially)
because they relate to parts of the international application that do not comply with the prescribed requirements to such an extent that no meaningful international search can be carried out, specifically:
see FURTHER INFORMATION sheet PCT/ISA/210

3. ☐ Claims Nos.:
because they are dependent claims and are not drafted in accordance with the second and third sentences of Rule 6.4(a).

Box No. III Observations where unity of invention is lacking (Continuation of item 3 of first sheet)

This International Searching Authority found multiple inventions in this international application, as follows:

1. ☐ As all required additional search fees were timely paid by the applicant, this international search report covers all searchable claims.

2. ☐ As all searchable claims could be searched without effort justifying an additional fees, this Authority did not invite payment of additional fees.

3. ☐ As only some of the required additional search fees were timely paid by the applicant, this international search report covers only those claims for which fees were paid, specifically claims Nos.:

4. ☐ No required additional search fees were timely paid by the applicant. Consequently, this international search report is restricted to the invention first mentioned in the claims; it is covered by claims Nos.:

Remark on Protest

☐ The additional search fees were accompanied by the applicant's protest and, where applicable, the payment of a protest fee.

☐ The additional search fees were accompanied by the applicant's protest but the applicable protest fee was not paid within the time limit specified in the invitation.

☐ No protest accompanied the payment of additional search fees.

FURTHER INFORMATION CONTINUED FROM PCT/ISA/ 210

Continuation of Box II.2

Claims Nos.: 1-23(partially)

ART. 6 PCT - MAJOR LACK OF CLARITY - INCOMPLETE SEARCH

The set of claims presently on file lacks clarity to such an extent that a meaningful search is not possible at this stage of the proceedings (Art. 17(2)(a)(ii) PCT). This is so for the following reasons:

Independent claims 1 and 20 have been so unduly broadly drafted and lack such a high number of essential features of the disclosed invention, that their scope is far beyond what is commensurate for the present invention as described in the description and as depicted in the drawings. In fact, basically any known automatic labelling apparatus and method anticipates the novelty of the independent claims, as any automatic labelling apparatus comprises an automatic conveying system, i.e. with a receiving end and a discharging end, a label applicator for attaching a label to an article, and a label securing means, either integrated with the label applicator or as separate device (e.g. known wipers, brushes, sponges, foams, pressers, etc.). This is so to such an extent, that almost any document of a whole series of CPC-classification groups could be used to object the lack of novelty of these independent claims, such as inter alia B65C9/26, B65C9/28, B65C9/30, B65C9/32, B65C9/34, or B65C9/36. In the same line of argumentation, even the common general knowledge could be used to object the lack of novelty of said independent claims.

The same applies, mutatis mutandis, to dependent claims 2-11, 13 and 21.

With respect to dependent claims 12, 14-19, 22 and 23, they disclose unrelated details of the apparatus of the invention in a very broad way. In the same way as above, the scope of these claims is overly broad with respect to the actual contribution to the art.

Consequently, the initial phase of the search revealed a very large number of documents relevant to the issue of novelty. So many documents were retrieved that it is impossible to determine which parts of the claims 1-23 may be said to define subject-matter for which protection might legitimately be sought.

It has been considered that the actual invention in view of the description, drawings and claims of the present application must at least include the following features:

A labelling apparatus comprising:
- a discharging chute (2);
- a linear conveyor (4)

downstream the discharging chute, for receiving a container delivered by

FURTHER INFORMATION CONTINUED FROM PCT/ISA/ 210

the discharging chute;
- a centering means (11-14) for centering a container received by the linear conveyor;
- a label applicator (15) downstream of the centering means, for applying a label onto a container placed on the linear conveyor, and a label securing means (25) for securing the label on the container;
- a discarding unit (19, 20) downstream of the label applicator, for discarding containers on the linear conveyor; and
- a dispensing container (9) downstream the discharging end of the linear conveyor, for receiving labelled containers.

This somehow corresponds to the subject-matter of claims 1 plus 5 plus 10 plus 12 plus 13. The search that has been carried out is thus incomplete in the sense that the whole scope of the claims in their broadest meaningful interpretation has not been covered. However, the search has covered the subject-matter of the claims in the context of the invention as described and represented in the figures. Consequently, claims 1 to 23 have been partially searched inasmuch as they comprise the technical features mentioned herein above.

The applicant's attention is drawn to the fact that claims relating to inventions in respect of which no international search report has been established need not be the subject of an international preliminary examination (Rule 66.1(e) PCT). The applicant is advised that the EPO policy when acting as an International Preliminary Examining Authority is normally not to carry out a preliminary examination on matter which has not been searched. This is the case irrespective of whether or not the claims are amended following receipt of the search report or during any Chapter II procedure. If the application proceeds into the regional phase before the EPO, the applicant is reminded that a search may be carried out during examination before the EPO (see EPO Guidelines C-IV, 7.2), should the problems which led to the Article 17(2) declaration be overcome.

INTERNATIONAL SEARCH REPORT

Information on patent family members

International application No
PCT/IB2018/055308

Patent document cited in search report	Publication date	Patent family member(s)	Publication date
US 4321103 A	23-03-1982	NONE	
US 6155322 A	05-12-2000	NONE	
EP 0608296 A1	03-08-1994	AT 133125 T	15-02-1996
		DE 4135106 A1	29-04-1993
		DE 59205126 D1	29-02-1996
		DK 0608296 T3	12-02-1996
		EP 0608296 A1	03-08-1994
		ES 2082512 T3	16-03-1996
		FI 941885 A	22-04-1994
		GR 3018894 T3	31-05-1996
		JP H07503216 A	06-04-1995
		WO 9308081 A1	29-04-1993