PATENT SPECIFICATION (11) 1 568 128

1 568 128

(21) Application No. 45004/77 (22) Filed 28 Oct. 1977
(31) Convention Application No. 7612081
(32) Filed 1 Nov. 1976 in
(33) Netherlands (NL)
(44) Complete Specification published 29 May 1980
(51) INT CL³ C03B 33/00
(52) Index at acceptance
C1M 400 401 TF



(54) METHOD OF BREAKING GLASS FIBRES

(71) We, N.V. PHILIPS' GLOEILAMPENFABRIEKEN, a limited liability Company, organised and established under the laws of the Kingdom of the Netherlands, of Emmasingel 29, Eindhoven, the Netherlands do hereby declare the invention, for which we pray that a patent may be granted to us, and the method by which it is to be performed, to be particularly described in and by the following statement:—

The invention relates to a method of breaking glass fibres destined for use in optical communication systems, each fibre to be broken being deformed in such a way that a tensile stress is produced in the fibre which decreases across the cross-section of the fibre, and fracture of the fibre being initiated by a score mark being made in the surface of the fibre at the location of maximum tensile stress and the fibre being fractured at the location of the score.

Fibres destined for use in optical communication systems must comply with stringent requirements. For example, the surfaces of the fibre ends are normally required to be as smooth as possible in order to minimize losses at laser-fibre couplings and fibre-fibre couplings.

A glass rod generally tends to break in such a way that the fracture surface has three zones: a mirror zone of optical surface quality, a hackle zone and a mist zone which constitutes the transition between the mirror zone and the hackle zone. This phenomenon, which also occurs when glass fibres are broken, is described comprehensively in the article by Johnson and Holloway: "On the Shape and Size of the Fracture Zones on Glass Fracture Surfaces" which appeared in "Philosophical Magazine", No. 14, October 1966, pages 731 to 743.

For most applications in optical communication systems the entire fracture surface of the fibre is required to be constituted by a mirror zone, and furthermore in many cases additional stringent requirements are imposed, for example, in respect to the perpendicular orientation of the fracture surface relative to the fibre axis.

From the previously mentioned publication a relationship is known between the shape and size of the mirror zone to the stress distribution across the fibre cross-section before the initiation of fracture. This relationship is reprsented by the equation in which for all points P of the mirror boundary:

$$Z_p r^{1/2} = C[N/mm^{3/2}]$$

where Zp is the stress component expressed in N/mm², normal to the fracture plane of the local stress at a point P at the mirror boundary before the initiation of fracture; r is the distance from the origin of fracture to the point P; C is a material constant.

In order to obtain a fracture surface solely having a mirror zone any point P on the fracture surface should meet the requirements:

$$Zp.r^{1/2} < C[N/mm^{3/2}]$$

wherein Zp, r and C are defined as above.

Another limiting factor is that the value of Zp for an arbitrary point P should not decrease to zero or even become negative, because otherwise fracture will continue in a direction which is not perpendicular to the fibre axis; a so-called lip may then be formed on one of the fibre ends.

A method in accordance with the aforesaid description is known from the article by Gloge *et al*: "Optical Fibre End Preparation for Low-Loss Splices", published in the journal "The Bell System Technical Journal", U.S.A., Vol. 52, No. 9, November 1973. In accordance with this known method a specific decreasing stress distribution across the fibre cross-section is obtained by bending the fibre over a convex surface in order to obtain a low value of Zp $r^{1/2}$; fracture is then initiated by scoring the bent portion of the fibre.

A disadvantage of this known method is that the fibre is mechanically scored with the aid of a diamond or sapphire cutter, so

that residual particles of scored fibre material may contaminate the fracture face. Moreover, a precision tool is required for carrying out this known method which complicates the use of the method in the field or, at times, even renders it impracticable.

One object of the present invention is to provide a method which is relatively more simple than the known method, which demands no special skill and which can be carried out with a very simple tool, so that it is particularly suitable for general use and for practical applications.

According to the present invention there is provided a method of breaking glass fibres destined for use in optical communication systems, each fibre to be broken being formed in such a way that a tensile stress is produced in the fibre which decreases across the cross-section of the fibre, a score mark being made in the surface of the fibre at the location of maximum tensile stress and the fibre being fractured at the location of the score, characterized in that the fibre is locally heated by means of a heating element, then bent around the heating element through a predetermined angle, the score mark being formed in the surface of the fibre at the location of the bend as an impression of the heating element, the bent condition of the fibre then being rendered permanent by cooling, after which a slight tensile stress is applied to the fibre on both sides of the bend and the fibre is broken at the location of the impression.

Thus, the fibre is permanently preformed and given a shape which is suitable for producing the desired stress distribution and for fracture whilst at the same time the necessary score for the initiation of fracture is formed by the impression of the heating element on the fibre; however, as no fibre material is removed contamination of the fracture surface is avoided. A fibre which has thus been preformed can be broken manually or with the aid of a simple tool. The heating element may have a sharp cutting edge, in order to obtain an accurate location of the fracture surface. An accurate orientation of the fracture surface is of importance when a bundle of fibres is to be broken so as to couple the bundle to an optical device or to another bundle.

The fibres can be pre-treated and prepared for fracture, after which of the fibres are broken simply by hand or by means of a tool at a convenient location, for example, in the field, and at a convenient time.

In one embodiment of the method of the invention a resistance wire whose diameter is at the most equal to the fibre diameter is employed as the heating element.

The resistance wire can simply be manufactured and replaced and requires only a small electric current which is again, of significance for work in the field.

In accordance with another embodiment of the method of the invention a second resistance wire with a diameter of at the most 1/10 of the fibre diameter is arranged between the first resistance wire and the fibre. The second thinner resistance wire, which substantially functions as a cutting edge, produces an impression of very small size on the fibre, whilst the first thicker resistance wire mainly serves for heating; the two resistance wires together function as the heating element.

According to a further aspect of the invention there is provided an apparatus for breaking glass fibre destined for use in optical communication systems comprising means for producing a deformation in the surface of the fibre at the point at which the fibre is to be broken, said means comprising a substantially flat substrate for supporting and holding one end of the fibre, a movable supporting block for contacting the other end of the fibre held in tension, at least one resistance wire connected to an associated electrical power source, said resistance wire being held in tension between two supports so that the wire crosses the fibre at the point where a deformation is to be produced when heat from the energised resistance wire deforms the fibre to a position set by the movable supporting block, and means to apply a tensile force on the fibre to break the fibre at the point of deformation.

By way of illustration certain embodiments of the invention will now be described in more detail with reference to the accompanying drawings in which:—

Figure 1 schematically represents the preparation of a fibre in a first phase of the method in accordance with the invention,

Figure 2 shows the pre-treated fibre,

Figure 3 shows a fibre end after fracture of the fibre.

A fibre 1 to be broken is placed on a horizontal table 3 and is fixed in position, for example, by means of a block 5. The fibre 1 then bears on a resistance wire 7, whose ends are fixed on two supports 9 in such a way that the wire is taut and touches the circumference of the fibre 1. The resistance wire 7 is connected to the terminals of a current source 11. Underneath the resistance wire 7 a second thicker resistance wire 8 is tensioned, which supports the resistance wire 7 over its full length. The reference numeral 13 designates a supporting block which may form part of the table 3. The supporting block 13 has an oblique supporting surface 15. The table 3, the supports 9 and the supporting block 13

are fixed relative to each other. The reference numeral 17 designates a switch.

The fibre 1 is preformed as follows:

By closing the switch 17 the clamped-in fibre 1 is heated by the resistance wires 7 and 8 at the location of the point of contact and locally softens. The fibre bends around the resistance wire 7 which functions as cutting edge, until the fibre portion which is disposed above the supporting block touches the supporting surface 15. At the location of the resistance wire 7 a bend or a kink is formed, the resistance wire 7 at the same time forming an impression *d* (Figure 2) on the fibre, so that the fibre is scored without the removal of fibre material.

After the switch 7 has been opened, the fibre which has thus been preformed is allowed to cool and retains the bent or kinked condition. Figure 2 shows the fibre which has bent through an angle *a*, *b* designates the kink and *d* the impression on the fibre.

The fibre is preformed and bent or kinked in such a way that by simply applying a slight tensile stress, the desired decreasing stress distribution in the fibre is produced and the fibre breaks at the location of the bend or kink so that the fracture surfaces exhibit a mirror zone over the entire area.

Figure 3 shows a fibre end with a fracture surface 19 which makes an angle *c* with the plane Y—Y at right angles to the axis X—X of the fibre 1 and with a part of the impression *d*.

Practical tests have been conducted with soda lime-glass fibres with an outer diameter D of 100 μm and a core diameter K of 50 μm; a single resistance wire with a diameter of 50 μm was used; the fibres were bent through an angle *a* of 2°, so that the bending or kinking angle was 178°; the angle *c* of the fracture surfaces was 1°.

WHAT WE CLAIM IS:—

1. A method of breaking glass fibres destined for use in optical communication systems, each fibre to be broken being deformed in such a way that a tensile stress is produced in the fibre which decreases across the cross-section of the fibre, a score mark being made in the surface of the fibre at the location of maximum tensile stress and the fibre being fractured at the location of the score, characterized in that the fibre is locally heated by means of a heating element, then bent around the heating element through a predetermined angle, the score mark being formed in the surface of the fibre at the location of the bend as an impression of the heating element, the bend condition of the fibre then being rendered permanent by cooling, after which a slight tensile stress is applied to the fibre on both sides of the bend and the fibre is broken at the location of the impression.

2. A method as claimed in Claim 1, characterized in that a resistance wire with a diameter which at the most equals the fibre diameter is used as the heating element.

3. A method as claimed in Claim 2, characterized in that between the first resistance wire and the fibre a second resistance wire is interposed with a diameter which is at the most 1/10 of the fibre diameter.

4. A glass fibre which is suitable for use in optical communication systems when prepared in accordance with the method as claimed in any of the Claims 1 to 3.

5. A method of breaking glass fibres substantially as hereinbefore described with reference to Figures 1 to 3 of the accompanying drawings.

6. An apparatus for breaking glass fibre destined for use in optical communication systems comprising means for producing a deformation in the surface of the fibre at the point at which the fibre is to be broken, said means comprising a substantially flat substrate for supporting and holding one end of the fibre, a movable supporting block for contacting the other end of the fibre held in tension, at least one resistance wire connected to an associated electrical power source, said resistance wire being held in tension between two supports so that the wire crosses the fibre at the point where a deformation is to be produced when heat from the energised resistance wire deforms the fibre to a position set by the movable supporting block, and means to apply a tensile force on the fibre to break the fibre at the point of deformation.

7. An apparatus for breaking glass fibres according to the method as described in any one of Claims 1 to 3 substantially as hereinbefore described with reference to Figure 1 of the accompanying drawings.

R. J. BOXALL,
Chartered Patent Agent,
Berkshire House,
168—173, High Holborn,
London, WC1V 7AQ.
Agent for the Applicants.

Printed for Her Majesty's Stationery Office, by the Courier Press, Leamington Spa, 1980
Published by The Patent Office, 25 Southampton Buildings, London, WC2A 1AY, from which copies may be obtained.

1568128 COMPLETE SPECIFICATION
1 SHEET *This drawing is a reproduction of the Original on a reduced scale*

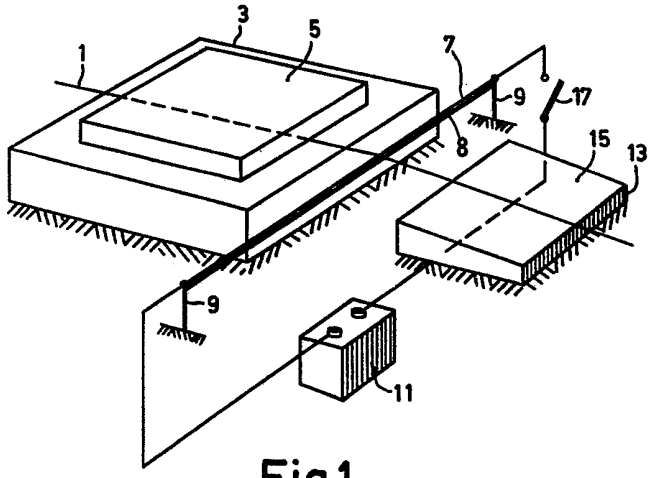

Fig.1

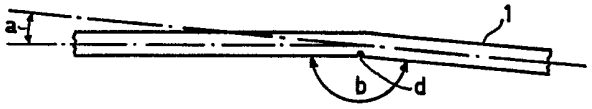

Fig. 2

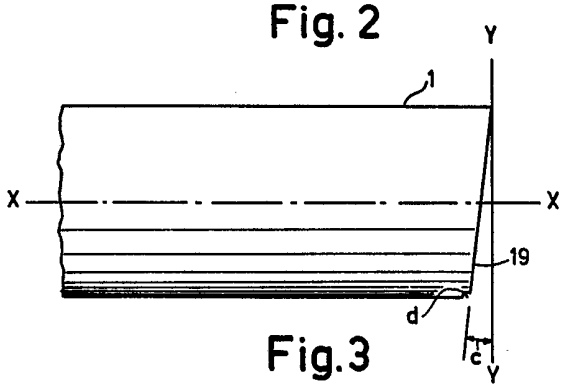

Fig.3