Dec. 29, 1964 J. V. H. IRELAND 3,162,914

SELF-LOCKING BUCKLE

Filed April 24, 1962

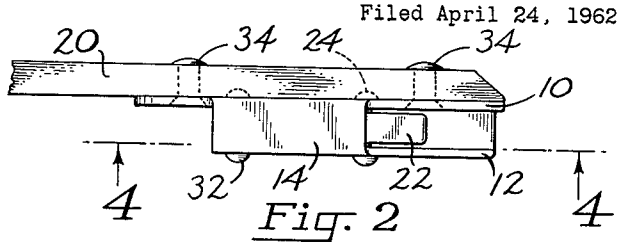

Fig. 2

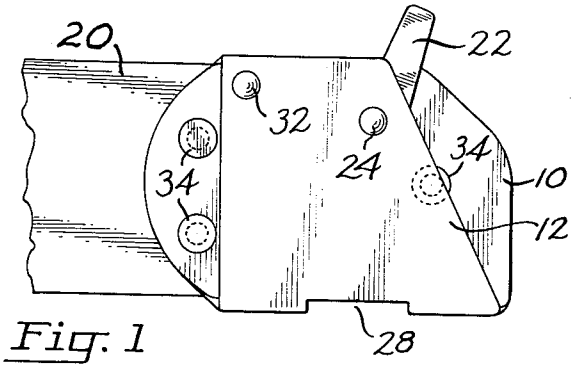

Fig. 1

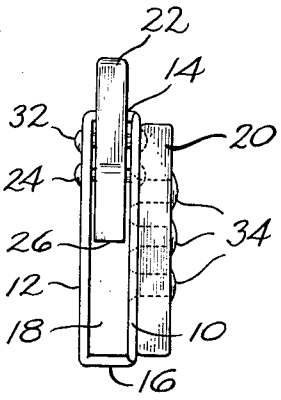

Fig. 3

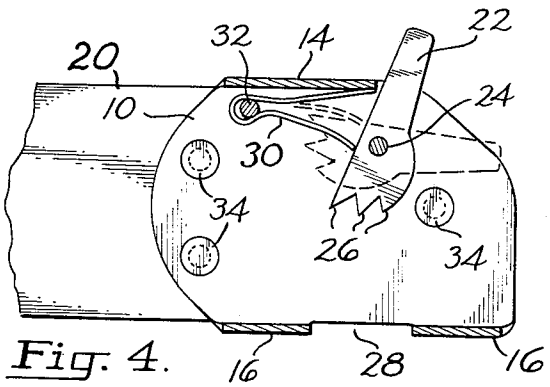

Fig. 4.

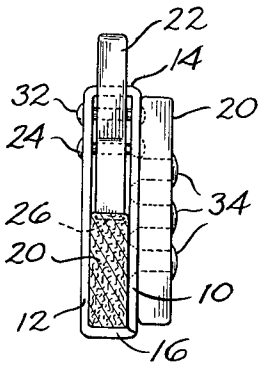

Fig. 6.

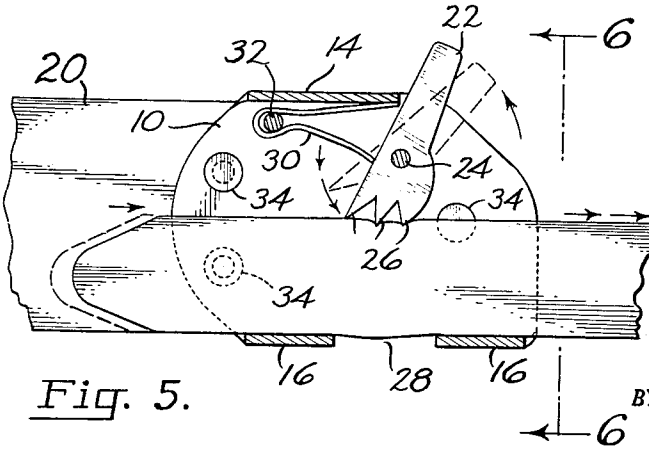

Fig. 5.

John V. H. Ireland
INVENTOR.

BY Olivier Q. Olson
Agent

United States Patent Office 3,162,914
Patented Dec. 29, 1964

1

3,162,914

SELF-LOCKING BUCKLE

John V. H. Ireland, P.O. Box 5724,
Mountain View, Alaska

Filed Apr. 24, 1962, Ser. No. 189,756
1 Claim. (Cl. 24—170)

This invention relates to buckles, and more particularly to a novel self-locking buckle for use with belts, straps, and other similar strip material hereinafter referred to as belts.

It is the principal object of the present invention to provide a self-locking buckle which is of minimum thickness in relation to an associated belt, and which is operable with maximum facility for releasably securing the belt in desired positions of adjustment.

Another important object of this invention is the provision of a self-locking buckle of simplified construction for economical manufacture.

The foregoing and other objects and advantages of this invention will appear from the following detailed description, taken in connection with the accompanying drawing in which:

FIG. 1 is a fragmentary view in front elevation showing attached to one end of a belt a self-locking buckle embodying the features of the present invention;

FIG. 2 is a fragmentary top plan view as viewed from the top in FIG. 1;

FIG. 3 is a view in side elevation as viewed from the right in FIG. 1;

FIG. 4 is a sectional view taken along the line 4—4 in FIG. 2;

FIG. 5 is a sectional view similar to FIG. 4 and showing the buckle in operative locking position in relation to a belt; and

FIG. 6 is a sectional view taken along the line 6—6 in FIG. 5.

In the embodiment illustrated, the self-locking buckle of this invention includes a frame which, in end view (FIG. 3), is of generally rectangular shape and is formed of a back wall 10 and a laterally spaced front wall 12 interconnected by the top wall 14 and the bottom, or base wall 16. The spacing between the back and front walls provides a longitudinal opening 18 through the frame which is only slightly wider than the thickness of the cooperating portion of a belt 20 with which the buckle is to be used (FIG. 6).

A locking lever 22 is positioned within the longitudinal opening of the frame and is mounted intermediate its ends pivotally on the frame by means of the pivot pin 24 which extends through aligned openings in the lever and back and front walls of the frame. The exposed opposite ends of the pin may be riveted over to secure the pin on the frame. One end of the lever projects above the top wall of the frame, on the infeed end of the latter, that is the end through which a belt is inserted through the longitudinal opening in the frame. This end of the lever serves as an actuating arm, as explained more fully hereinafter.

The opposite end of the lever 22 provides a gripping surface which is adapted to releasably engage a belt. When the lever is rotated counterclockwise to its limit established by abutment with the adjacent end of the top wall 14, the belt gripping surface is disposed at substantially its closest distance from the bottom wall 16 of the frame. This distance is slightly less than the width of the belt with which the buckle is associated. In this manner the gripping surface functions to engage the adjacent edge of the belt, during counterclockwise rotation of the lever arm, and to force the opposite edge of the belt into firm frictional contact with the bottom wall 16 of the frame. This is achieved by virtue of the lateral support provided the belt by the back and front walls 10, 12 which prevent collapsing of the belt in its widthwise dimension. The belt thus is secured in the desired position of adjustment.

2

In the embodiment illustrated, the belt gripping surface of the lever 22 is serrated to provide a plurality of teeth 26. The terminal ends of the teeth are spaced progressively farther from the pivot axis 24 of the lever, in the clockwise direction of rotation. Accordingly, as the lever is rotated counterclockwise the teeth are caused to penetrate progressively farther into the adjacent edge of the belt, to provide a progressively increased hold on the belt.

The belt gripping end of the lever preferably is only slightly narrower than the longitudinal opening 18 in the frame, and hence is substantially the same width as the belt, to provide maximum contacting surface on the adjacent edge of the belt.

To enhance still further the gripping effectiveness of the buckle, an opening 28 is provided in the bottom wall 16 in the area opposite the locking position of the lever. Thus, the force of the lever causes the portion of the opposite edge of the belt registering with the opening 28 to be forced into the latter. This offsetting of a portion of the edge of the belt provides additional resistance to the retraction of the belt from the buckle.

A generally U-shaped leaf spring 30 is positioned within the frame, as by the pivotal mounting on the transverse pin 32 which traverses the frame opening and is supported at its opposite ends on the back and front walls. One end of the spring is arranged to engage the undersurface of the top wall 14 of the frame, and the other end of the spring is arranged to engage the locking lever 22 at a point below the pivot 24. In this manner the locking lever is urged normally to its limit of counterclockwise rotation.

As indicated in FIGS. 2 and 3, one end of the belt 20 is secured to the outer surface of the back wall 10 of the frame, as by means of the rivets 34. This end of the belt preferably is substantially the same width as the back wall 10. Means other than the rivets may be employed for attachment. For example, the back wall of the frame may be slotted to receive the looped end of a belt, in the manner of conventional trouser belts.

In the use of the buckle described hereinafter, reference is made particularly to FIGS. 4, 5 and 6 of the drawing. The free end of the belt 20 is threaded into the frame opening 18, from the right hand infeed end toward the left hand outfeed end. Although by hand manipulation the lever 22 may be rotated clockwise to the position shown in dotted line in FIG. 4, to provide unobstructed opening for passage of the belt under the lever, it is perhaps more convenient simply to feed the belt toward the left without manually retracting the cam. Referring to FIG. 5, as the belt progresses toward the left and engages the intercepting lever, the latter is caused to be rotated clockwise, against the resistance of the spring 30, to the position shown in dotted lines. When the belt has been adjusted to a desired position, slight movement of the belt in the retracting direction (indicated by the arrows in FIG. 5) causes the engaged lever arm to be rotated in the counterclockwise direction indicated by the arrows. During this counterclockwise rotation the engaging teeth 26 apply progressively increased force on the adjacent edge of the belt, until the lever is moved into abutment with the adjacent edge of the top wall 14 of the frame.

To release the belt from its locked position in the buckle, the actuator end of the lever is rotated clockwise (FIG. 4) to move the teeth 26 out of engagement with the adjacent belt edge, whereupon the belt may be retracted from the buckle.

To accommodate the buckle to belts of various widths, the frame dimensions are modified only to the extent of providing the appropriate distance between the bottom wall **16** and the teeth **26**, in the normal locking position of the lever.

It will be apparent to those skilled in the art that various changes may be made in the structural details described hereinbefore. For example, the spring **30** may be eliminated, although its use is preferred for automatically holding the lever teeth in normally locking position. The projecting actuator end of lever **22** may be confined wholly within the profile of the frame and actuated by a pin projecting forwardly through an arcuate slot in the front wall **12**. Alternatively, the lever may be secured firmly to its pivot pin **24** and the latter extended outwardly through the front wall **12** to carry a hand knob or lever.

The foregoing and other modifications may be made, as desired, without departing from the spirit of this invention and the scope of the appended claim.

Having now described my invention and the manner in which it may be used, what I claim as new and desire to secure by Letters Patent is:

A belt buckle comprising a frame having a longitudinal opening defining infeed and outfeed ends for the passage of a belt therethrough, the frame including side walls spaced apart slightly greater than the thickness of the belt to support the latter against widthwise collapsing and a base wall for engagement by one longitudinal edge of the belt, lever means having a belt engaging end substantially the same width as said longitudinal opening between the side walls, pivot means mounting the lever means on the frame for pivotal movement of the belt engaging end between said side walls between an inoperative retracted position and an operative locking position spaced from the base wall a distance less than the width of the belt for engaging the latter on its edge opposite the edge engaging the base wall, the belt engaging end being spaced farther from the base wall and infeed end of the frame opening in the retracted position than in the locking position, the base wall being apertured in the area opposite the operative position of the belt engaging end of the lever means, whereby the registering portion of the belt edge is forced into said aperture by the lever means in said operative position, resilient means urging the lever means to said operative position, and abutment means on the frame arranged to intercept the path of movement of the lever means for limiting movement of the belt engaging end of the lever means in the operative direction.

References Cited in the file of this patent

UNITED STATES PATENTS

63,782	Caldwell	Apr. 16, 1867
206,169	Fayman	July 23, 1878
324,984	Cook	Aug. 25, 1885
1,503,567	Wallis et al.	Aug. 5, 1924
2,060,628	McCormick	Nov. 10, 1936