Aug. 3, 1926. 1,594,431

J. THOMSON

DEVICE FOR PRINTING NAMES OR OTHER INDICATIONS ON GOLF BALLS

Filed March 30, 1926

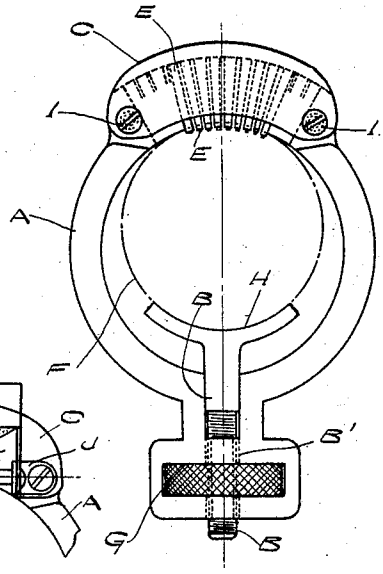

Fig. 1.

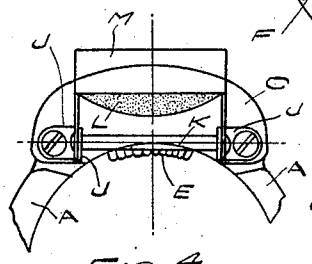

Fig. 4.

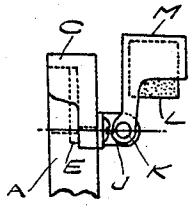

Fig 5

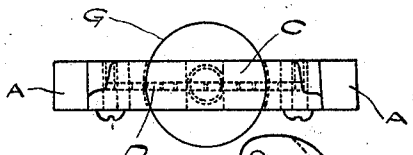

Fig. 2.

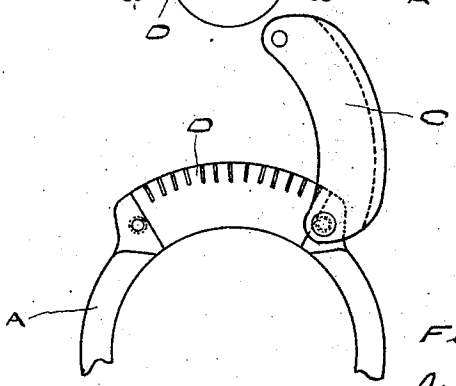

Fig. 3.

Inventor
John Thomson
By
W. Singer, Atty

Patented Aug. 3, 1926. 1,594,431

UNITED STATES PATENT OFFICE.

JOHN THOMSON, OF MILNGAVIE, SCOTLAND.

DEVICE FOR PRINTING NAMES OR OTHER INDICATIONS ON GOLF BALLS.

Application filed March 30, 1926, Serial No. 98,539, and in Great Britain April 4, 1925.

My invention relates to a device for printing a name or other indication on a golf ball.

It is well known that golfers lose a great many balls on the golf course, frequently only temporarily, and when such are found there is a difficulty sometimes distinguishing to whom the ball belongs. Ofttimes it is difficult to know, even in the course of the game, on the putting green for instance, a golfer's own ball. The object, therefore, of my invention is to obviate this by producing a device by which a golfer can print his or her full name or other indication on the ball.

In carrying out this invention, I provide a circular frame of aluminum or other suitable metal or material having at the lower end thereof a hole or opening through which there is passed a threaded spindle or rod, the inner end of which forms a cup or saucer-shaped holder integral with said rod for the ball. The outer end of the spindle or rod is connected to a suitably shaped operating nut. The upper end of the frame is so recessed as to receive the type of the owner of the ball, may be placed therein, and a cover-plate is placed over same and detachably fixed to the upper part by suitable screws to the frame and so retains the type in position.

As a means for inking the type, I provide a little bracket at each end of the cover-plate which is suitably attached thereto and between which there is a hinge-pin on which there is suitably pivoted a frame or casing containing a suitable ink-pad.

In order that my invention may be properly understood and readily carried into effect, I have hereunto appended one sheet of drawings, of which—

Figure 1 is a front elevation illustrating my invention.

Figure 2 is a plan of Figure 1.

Figure 3 is a part front elevation showing the cover-plate open.

Figure 4 is a part front elevation showing the pad for inking the type.

Figure 5 is a side view of Figure 4.

Referring to the drawings, A is the frame, B′ the hole through which a threaded spindle B passes, H is the saucer-shaped holder for the golf ball F suitably attached to or integral with spindle B. G is the threaded nut which is carried on the threaded-spindle B. D are the recesses on the upper part of the frame A into which the type E is positioned, C being the cover-plate for retaining the type E in position, which cover-plate C is detachably fixed to the upper end of the frame A by screws I or other convenient means.

J are the brackets fixed to the cover-plate C and K is the hinge-pin carrying the casing M in which the ink pad L is placed.

The modus operandi is as follows:—

Before the ball is placed in the cup or saucer-shaped holder H, the casing M with ink-pad is swung around on its hinge-pin K and comes into contact with the type E by which a sufficient supply of ink is left thereon for printing purposes. The holder H with golf ball F is screwed up by the handle or nut G, and, when it comes into contact with the type E, the name is permanently embossed on the face of the ball and coloured with the ink. The nut G is then turned in the opposite direction and the holder H with golf ball F is relieved of its engagement with the type E and the ball F can then be removed and the device ready for another.

Claims:—

1. Device for printing the full name or other indication on a golf ball, characterized by the provision of a circular frame, a threaded spindle passing through an opening or hole at lower end of said frame and having a saucer-shaped holder forming part of said spindle, a threaded-nut carried on said threaded spindle received in an aperture in an extension of the circular frame, and recesses formed on the upper part of said frame to receive the type, and with a hinged cover-plate so constructed as to retain the type in position, substantially as and for the purposes hereinbefore described and illustrated.

2. Device as in claim 1, characterized by the provision of a pair of brackets, a hinge-pin, a casing carried thereon and an ink-pad fixed on said casing, substantially as and for the purposes hereinbefore described and illustrated.

In testimony whereof I affix my signature.

JOHN THOMSON.