Nov. 11, 1924. 1,514,881

G. S. VAN NORMAN

AUTOMATIC REVERSING CONTROL

Filed Nov. 20, 1920 2 Sheets-Sheet 1

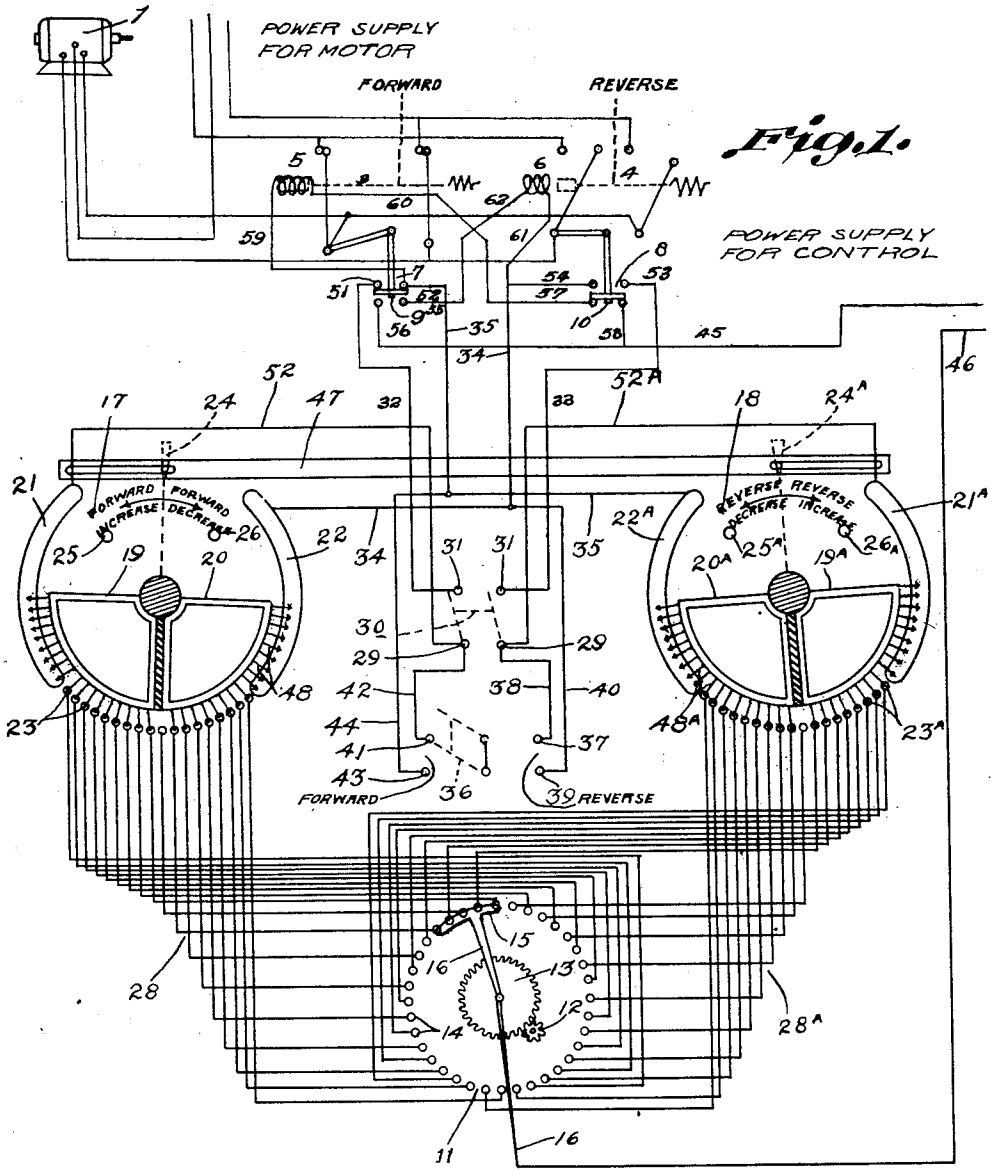

Fig. 1.

Inventor
George S. Van Norman

By Whittemore Hulbert & Whittemore

Attorneys

Nov. 11, 1924. 1,514,881

G. S. VAN NORMAN

AUTOMATIC REVERSING CONTROL

Filed Nov. 20, 1920 2 Sheets-Sheet 2

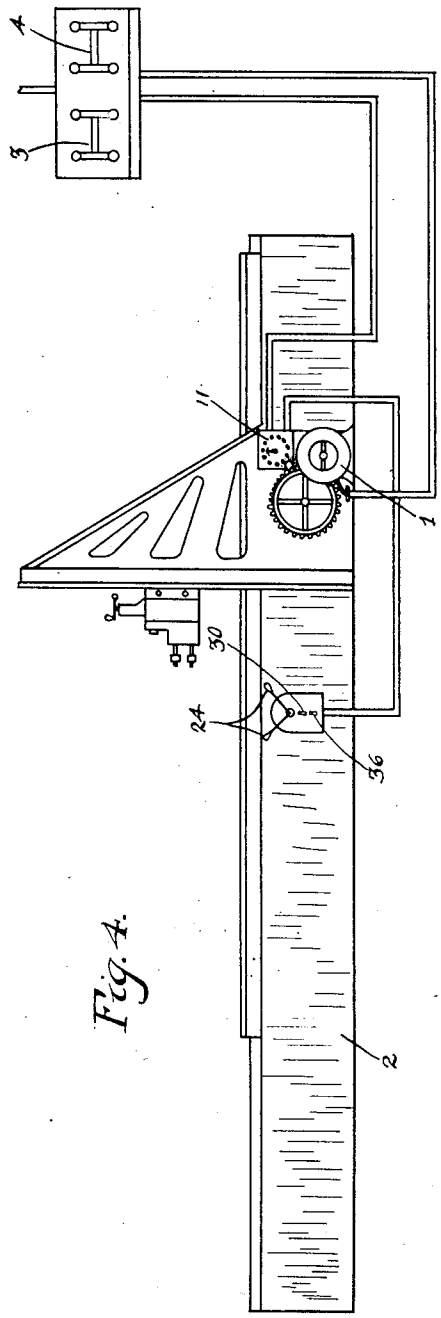

Fig. 4.

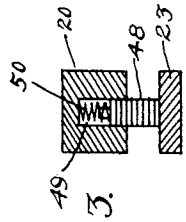

Fig. 3.

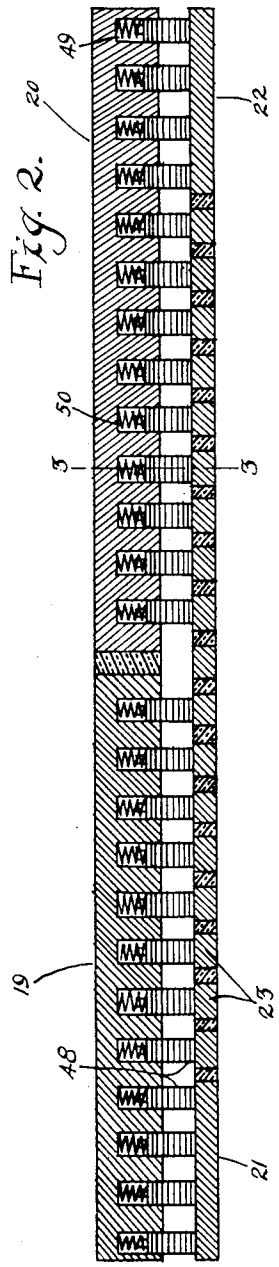

Fig. 2.

Inventor
George S. Van Norman

By Whittemore Hulbert & Whittemore

Attorneys

Patented Nov. 11, 1924. 1,514,881

UNITED STATES PATENT OFFICE.

GEORGE S. VAN NORMAN, OF DETROIT, MICHIGAN.

AUTOMATIC REVERSING CONTROL.

Application filed November 20, 1920. Serial No. 425,536.

To all whom it may concern:

Be it known that I, GEORGE S. VAN NORMAN, a citizen of the United States of America, residing at Detroit, in the county of Wayne and State of Michigan, have invented certain new and useful Improvements in Automatic Reversing Controls, of which the following is a specification, reference being had therein to the accompanying drawings.

The invention relates to controls for governing the operation of reversing electric motors, which are adapted to drive reciprocating machines, such as planers, rockable electric furnaces, etc.

The invention has for one of its objects the provision of means for electrically controlling the amount of travel of the reciprocating machine, the position of such travel with respect to the maximum limits thereof, or both, while the motor is in operation. Another object is to electrically limit the amount of travel of the reciprocating machine when manually operating the motor. Other objects of the invention reside in the novel features as more fully hereinafter set forth.

In the drawings:—

Figure 1 is a diagrammatical representation of an electric system embodying my invention;

Figure 2 is a sectional elevation of a controller;

Figure 3 is a cross section on the line 3—3 of Figure 2;

Figure 4 shows a possible arrangement of my invention as applied to a reciprocating machine such as a planer.

1 is a reversing electric motor, and 2, a reciprocating machine driven from the motor. 3 and 4 are standard two pole magnetically operated switches or contactors, which control the reversal of the motor circuit. These switches are normally held open but are closed whenever the respective operating coils 5 and 6 are energized. 7 and 9 are auxiliary switches connected to the operating coils 5 and 6, respectively, and adapted to be operated simultaneously with the contactor 3, the arrangement being such that when current flows through, the operating coil 5, contactor 3 and switch 7 are closed, while the switch 9 is open and, vice versa, when no current flows through, the operating coil 5, contactor 3 and switch 7 are open, while the switch 9 is closed. 8 and 10 are other auxiliary switches connected to the operating coils 6 and 5, respectively, and adapted to be operated simultaneously with the contactor 4, the arrangement being such that when current flows through the operating coil 6, contactor 4 and switch 8 are closed, while the switch 10 is open, and, vice versa, when no current flows through the operating coil 6, contactor 4 and switch 8 are open while the switch 10 is closed. Any suitable mechanical arrangement for the operation of the switches and contactors by the operating coils 5 and 6 may be used, such as shown diagrammatically in Figure 1. By the above arrangement of connections only one contactor can be closed at one time, the other being open.

11 is a dial switch, positively driven from the machine 2, as by means of the pinion 12 and the gear 13. This dial switch comprises the circular series of contacts 14, which are stationary, and the rotatable contact 15, mounted upon the arm 16, and fixedly secured to the gear 13. The rotatable contact 15, of this dial switch 11, is of sufficient length to engage simultaneously five of the contacts 14.

17 is a controller, which comprises the segment shaped contact arms 19 and 20, mechanically connected to each other, but electrically insulated from each other, and the arch shaped conductor plates 21 and 22, and the arch shaped series of contacts 23, which are located between the adjacent ends of the plates 21 and 22 and arranged concentric therewith. Each of the segment shaped contact arms is provided with a series of contact brushes or fingers 48, which are adapted to make contact with their respective conductor plates 21 and 22, and the contacts 23. As specifically shown, the contact brushes or fingers are slidably mounted in the holes 49, in the arms 19 and 20, there being coil springs 50, fitting over the small inner ends 49, of the brushes 48, for forcing the contact brushes or fingers into engagement with their plates 21 and 22, and the contacts 23.

For adjustably rotating the segment shaped contact arms 19 and 20, the handle 24 is provided, and for limiting the amount of rotation of the arm, suitable stops 25 and 26, are arranged to be engaged by the handle 24.

18 is a controller, which comprises the

segment shaped contact arms 19ª and 20ª, the arch shaped conductor plates 21ª and 22ª, the contacts 23ª, the contact brushes 48ª, the handle 24ª, and the stops 25ª and 26ª, and is electrically and mechanically similar to the controller 17.

The handles 24 and 24ª, of the controllers 17 and 18 respectively, are connected by a suitable mechanical interlock 47, so that neither handle can be moved in such a direction as to electrically connect more than one half of the contacts 23 or 23ª, to the arch shaped plates 22 or 22ª respectively, until the other handle has been moved a corresponding distance. In other words, the reversal positions of the dial switch 11, due to the positions of the controllers 17 and 18, can never come closer than the minimum distance fixed by this mechanical interlock 47.

28 and 28ª are electrical connections between the stationary contacts 14 of the dial switch 11 and the contacts 23 and 23ª of the controllers 17 and 18 respectively, the arrangement being such that the total number of contacts 23 and 23ª of the controllers 17 and 18 is equal to the total number of contacts 14 of the dial switch 11.

30 is a switch for controlling the connections of the system for automatic operation and 36 is a switch for controlling the hand operation of the system, this switch 36 being normally opened.

The arch shaped plate 21, of the controller 17, is electrically connected to the terminal 29, of the switch 30, and the terminal 41, of the switch 36, by means of the electrical connections 52 and 42. The arch shaped plate 21ª, of the controller 18, is electrically connected to the terminal 29ª, of the switch 30, and the terminal 37, of the switch 36, by means of the electrical connections 52ª and 38.

The arch shaped plate 22, of the controller 17 is electrically connected to the terminal 39, of the switch 36, the terminal 54, of the switch 8, and one terminal of the coil 6, by means of the electrical connections 34, 40 and 61. The other terminal of the coil 6, is electrically connected to the terminal 55, of the switch 9, by means of the electrical connection 62. The arch shaped plate 22ª, of the controller 18, is electrically connected to the terminal 43, of the switch 36, the terminal 52, of the switch 7, and one terminal of the coil 5, by means of the electrical connections 35, 44 and 59. The other terminal of the coil 5, is electrically connected to the terminal 57, of the switch 10, by means of the electrical connection 60.

The terminal 31, of the switch 30, is electrically connected to the terminal 51, of the switch 7, by means of the electrical connection 32. The terminal 31ª, of the switch 30, is electrically connected to the terminal 53, of the switch 8, by means of the electrical connection 33.

The terminal 56, of the switch 9, and the terminal 58, of the switch 10, are electrically connected to the power supply line 45. The contact 15, of the dial switch 11, is electrically connected through the arm 16, to the power supply line 46.

For convenience of operation the controllers 17 and 18 may be mounted in the same frame, with the switches 30 and 36 and thus form a unit which may be located any desirable distance from the machine 2 and the dial switch 11, which is mounted thereon, and positively driven from said machine 2.

In operation, assuming the machine 2 and the motor 1 to be running forward, with the forward contactor 3 and the switch 30 closed, and the switch 36 open, the circuit is completed from the power supply line 46, through the arm 16, the rotatable contact 15 and the stationary contacts 14, the electrical connections 28, the contacts 23, the brushes 48, the segment shaped contact arm 19, the arched shaped plate 21, the electrical connection 52, one side of the switch 30, the electrical connection 32, the switch 7, the electrical connection 59, the coil 5, the electrical connection 60, and through the switch 10 to the power supply line 45.

The machine 2, in running forward, rotates the rotatable contact 15, of the dial switch 11, which upon reaching the first contact 14, electrically connected to the arch shaped plate 22, of the controller 17, through the electrical connections 28, the contacts 23, the brushes 48 and the segment shaped contact arm 20, establishes electrical connection through the electrical connections 34 and 61, the coil 6, and the electrical connection 62, to the terminal 55, of the switch 9, which latter is open. When the rotatable contact 15, of the dial switch 11, leaves the last contact 14, electrically connected to the arch shaped plate 21, of the controller 17, through the electrical connections 28, the contacts 23, the brushes 48 and the segment shaped contact arm 19, the forward contactor 3 automatically opens, thereby closing the switch 9 and completing the electrical circuit of the coil 6 to the power supply line 45. Upon the opening of the forward contactor 3, therefore, the reverse contactor 4, operated by the coil 6, closes and the electric motor 1 and the machine 2 run in the reverse direction, driving also in the reverse direction the contact 15, of the dial switch 11.

The contactor 4 in closing, opens the switch 10 and closes the switch 8, thereby establishing electrical connection from the power line 46, through the arm 16, the rotatable contact 15, the contacts 14, the electrical connections 28ª, the contacts 23ª, the brushes 48ª, the segment shaped contact arm 19ª, the arch shaped plate 21ª, the electrical

connection 52ª, one side of the switch 30, the electrical connection 33, the switch 8, the electrical connection 61, the coil 6, the electrical connection 62, and the switch 9, to the power supply line 45.

When the rotatable contact 15, of the dial switch 11, reaches the first contact 14, electrically connected to the arch shaped plate 22ª, of the controller 18, through the electrical connections 28ª, the contacts 23ª, the brushes 48ª and the segment shaped contact arm 20ª, it establishes electrical connection through the electrical connections 35 and 59, the coil 5 and the electrical connection 60, to the terminal 57, of the switch 10, which latter is open. When the rotatable contact 15, of the dial switch 11, leaves the last contact 14, electrically connected to the arch shaped plate 21ª, of the controller 18, through the electrical connections 28ª, the contacts 23ª, the brushes 48ª and the segment shaped contact arm 19ª, the reverse contactor 4, automatically opens, thereby closing the switch 10 and completing the electrical circuit of the coil 5 to the power supply line 45. The forward contactor 3, operated by the coil 5, then closes and the electric motor 1 and the machine 2 again run in the forward direction.

From the above description it will be seen that the electric motor 1, and the machine 2 driven thereby, automatically reverse and run in each direction, through that portion of the maximum range, which drives the rotatable contact 15, of the dial switch 11, over the contacts 14, of said switch, which are electrically connected to the arch shaped plates 21 and 21ª, of the controllers 17 and 18 respectively, through their respective electrical connections 28 and 28ª, brushes 48 and 48ª and segment shaped contact arms 19 and 19ª.

The length of this portion of the maximum range and also its position within the said maximum range, is varied by changing the positions of the segment shaped contact arms of the controllers 17 and 18, by means of the handles 24 and 24ª respectively. The reversing motion can thereby be easily adjusted to maximum, or any portion thereof, in any position thereof desired, while the machine is in operation.

When it is desired to operate the machine by hand control, the switch 30 is opened and the switch 36 may then be used to close either contactor 3 or 4, to operate the machine in a direction controlled by these contactors and through the distance covered by the electrical connection of the contacts 14 of the dial switch 11, to the arch shaped plates 21 and 21ª of the controllers 17 and 18 respectively, through their respective electrical connections 28 and 28ª, brushes 48 and 48ª, and segment shaped contact arms 19 and 19ª. If it is attempted to exceed this distance, by holding the switch 36 in contact on the forward side, the machine will run until the dial switch contact 15, leaves the last contact 14 electrically connected to the arch shaped plate 21, of the controller 17, through the electrical connections 28, the contacts 23, the brushes 48 and the segment shaped contact arm 19. The forward contactor 3 will then open, and the electrical circuit will be completed from the supply line 46, through the arm 16, the contact 15 and the contacts 14 of the dial switch 11, the electrical connections 28, the contacts 23, brushes 48, segment shaped contact arm 20 and arch shaped plate 22, of the controller 17, the electrical connections 34 and 61, the coil 6, the electrical connection 62, and the switch 9 to the supply line 45. The reverse contactor 4 will now close and the machine will run in the reverse direction. When the contact 15 of the dial switch 11, leaves the last contact 14, electrically connected to the arch shaped plate 22, of the controller 17, through the electrical connections 28, the contacts 23, brushes 48 and segment shaped contact plate 20, the reverse contactor 4 will open, thereby closing the switch 10, and completing the electrical circuit from the supply line 46, through the arm 16, the contact 15, and the contacts 14, of the dial switch 11, the electrical connections 28, the contacts 23, brushes 48, segment shaped contact arm 19 and arch shaped plate 21, of the controller 17, the electrical connections 52 and 42, the switch 36, the electrical connections 44, 35 and 59, the coil 5, the electrical connection 60 and the switch 10, to the supply line 45. The machine will now run forward and will repeat this cycle, oscillating back and forth through a few degrees, until the switch 36 is opened. The corresponding operations would take place by means of the controller 18, if the switch 36 was held in contact on the reverse side.

When changing from hand control to automatic control, the switch 30 is closed and the switch 36 is momentarily closed to start the motor in either direction desired.

From the above description it will be readily seen that I have provided an electrical control for a reversing electric motor, which control may be located where desired and without reference to the position of the motor. Furthermore, the control will act as a limit stop under all conditions, thereby avoiding the need of an additional limit stop protection.

What I claim as my invention is:

1. The combination with a reversing electric motor and means associated therewith for controlling the reversal of the motor circuit, of a switch comprising a series of contacts and a movable contact engageable with said series of contacts and driven from

said motor, manually operable controllers for governing the operation of said motor, each of said controllers comprising a pair of arch shaped plates electrically connected to said reversal controlling means, an arch shaped series of contacts between adjacent ends of said plates and concentric therewith, said arch shaped series of contactors being electrically connected to said series of contacts of said switch, and a pair of segment shaped contact arms mechanically connected together and electrically connected to said arch shaped series of contacts, and said arch shaped plates, and power supply connections extending to said movable contact of said switch and to said reversal controlling means.

2. The combination with a motor and means associated therewith for controlling the reversal of the motor circuit, of a dial switch having a circular series of contacts and a rotatable contact engageable with said series of contacts and driven from said motor, a pair of manually operable controllers for governing the operation of said motor, each of said controllers comprising a pair of arch shaped plates, an arch shaped series of contacts between adjacent ends of said plates and concentric therewith, said arch shaped series of contacts being electrically connected to the circular series of contacts of said dial switch, and a pair of mechanically connected segment shaped contact arms electrically insulated from each other and adapted to be electrically connected to said arch shaped series of contacts and said plates, electrical connections between one of the arch shaped plates of each controller and said reversal controlling means and electrical connections between the other of said arch shaped plates of each controller and said reversal controlling means including a switch.

3. The combination of a motor and means associated therewith for controlling the reversal of the motor circuit of a dial switch having a circular series of contacts and a rotatable contact engageable with said series of contacts and driven from said motor, a pair of manually operable controllers for governing the operation of said motor, each of said controllers comprising a pair of arch shaped plates, an arch shaped series of contacts between adjacent ends of said plates and concentric therewith, said arch shaped series of contacts being electrically connected to the circular series of contacts of said dial switch, and a pair of mechanically connected segment shaped contact arms electrically insulated from each other and adapted to be electrically connected to said arch shaped series of contacts and said plates, electrical connections between one of the arch shaped plates of each controller and said reversal controlling means, electrical connections between the other of said arch shaped plates of each controller and said reversal controlling means including a switch, and electrical connections including a manually operable switch between said electrical connections of said arch shaped plates and reversal controlling means.

4. The combination of a motor and magnetic contactors associated with said motor for controlling the reversal of the same, of a switch having a series of stationary contacts and a movable contact driven from said motor, means for electrically controlling said motor including manually operable controllers electrically connected to said switch and magnetic contactors and a switch for automatic control, and a manual starting switch in the connections between said controllers and magnetic contactors.

5. The combination with a reversing electric motor and means associated therewith for controlling the reversal of the motor circuit, of a switch comprising a series of contacts and a cooperating movable contact, the latter being positively driven in timed relation to said motor and engageable with said series of contacts, a manually operable controller electrically connected to said switch and to said reversal controlling means, the connections being such as to automatically reverse said motor after a predetermined movement of said movable contact relative to said series of contacts, and means for manually adjusting said controller to vary the amount of movement of said movable contact before reversal of said motor.

6. The combination with a reversing electric motor and means associated therewith for controlling the reversal of the motor circuit, of a switch comprising a series of stationary contacts and a cooperating movable contact, the latter being positively driven by said motor to successively engage said stationary contacts, a manually operable controller having stationary contacts connected respectively with said reversal controlling means and with the stationary contacts of said switch, said controller having a movable contact arm engaging the stationary contacts thereof, the connections being such as to automatically reverse said motor when the movable contact of said switch engages a predetermined stationary contact thereof, and means for manually adjusting the movable contact arm of said controller to vary the electrical connections whereby the automatic reversal of said motor is accomplished when the movable contact of said switch engages another predetermined stationary contact.

7. The combination with an oscillating member, and means for driving the same in opposite directions, of electro-magnetic

means for controlling the reversal of said member, including a switch having relatively movable contacts, one of said contacts being positively driven in timed relation to said oscillating member, and a controller electrically connected to said contacts in such a manner that said oscillating member is automatically reversed after a predetermined movement thereof, said controller being manually adjustable to vary the amount of movement of said oscillating member before the automatic reversal thereof.

8. The combination with an oscillating member, and means for driving the same in opposite directions, of electro-magnetic means for controlling the reversal of said member, including a switch having a movable contact and a series of co-operating stationary contacts, means for positively driving said movable contact in timed relation to said member, a pair of controllers electrically connected to said stationary contacts in such a manner that said oscillating member is automatically reversed after a predetermined movement thereof in each direction, one of said controllers being manually adjustable to vary the amount of movement of said oscillating member in one direction before the automatic reversal thereof, and the other of said controllers being adjustable to similarly control the reversal of said oscillating member when the latter is moving in the opposite direction.

9. The combination with an oscillating member, and means for driving the same in opposite directions, of electro-magnetic means for controlling the reversal of said member, including a switch having a movable contact and a series of co-operating stationary contacts, means for positively driving said movable contact in timed relation to said member, a pair of controllers electrically connected to said stationary contacts in such a manner that said oscillating member is automatically reversed after a predetermined movement thereof in each direction, one of said controllers being manually adjustable to vary the amount of movement of said oscillating member in one direction before the automatic reversal thereof, and the other of said controllers being adjustable to similarly control the reversal of said oscillating member when the latter is moving in the opposite direction, and an interlock for said adjustable controllers for the purpose described.

10. The combination with an oscillating member, and means for driving the same in opposite directions, of electro-magnetic means for controlling the reversal of said member, including a switch having a movable contact positively driven in timed relation to said oscillating member, a series of co-operating stationary contacts, a pair of controllers electrically connected to said stationary contacts in such a manner that the movement of said movable contact into engagement with a predetermined stationary contact automatically reverses said oscillating member and the reverse movement of said movable member into engagement with a second predetermined contact again reverses said oscillating member, means for independently adjusting said controllers to change the predetermined contacts causing the reversal, and an interlock limiting the independent adjustment of said controllers with respect to each other.

In testimony whereof I affix my signature.

GEORGE S. VAN NORMAN.