March 26, 1963 D. CARDWELL ETAL 3,082,975

UNDER-SEA AND HEAVIER-THAN-AIR CRAFT OR THE LIKE

Filed Sept. 11, 1961 2 Sheets-Sheet 1

Fig. 1.

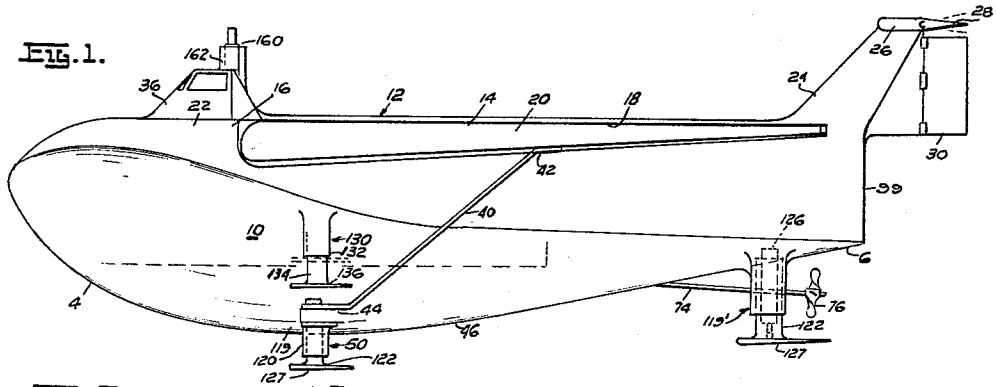

Fig. 2.

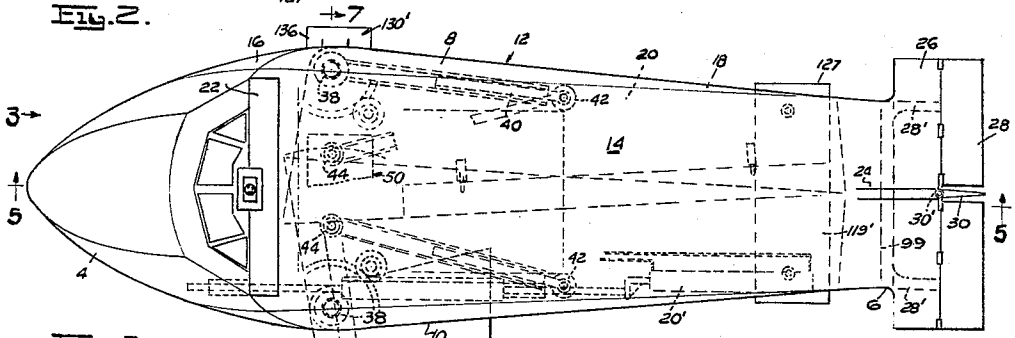

Fig. 7.

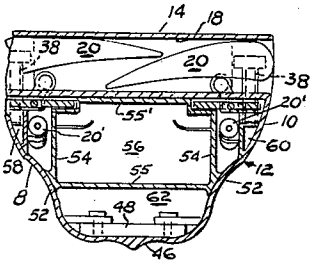

Fig. 10.

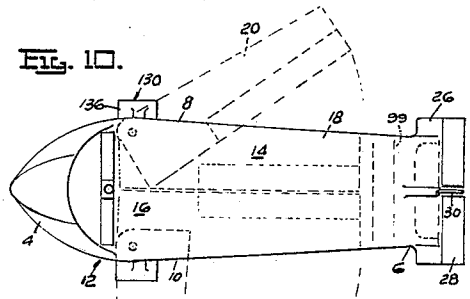

Fig. 3.

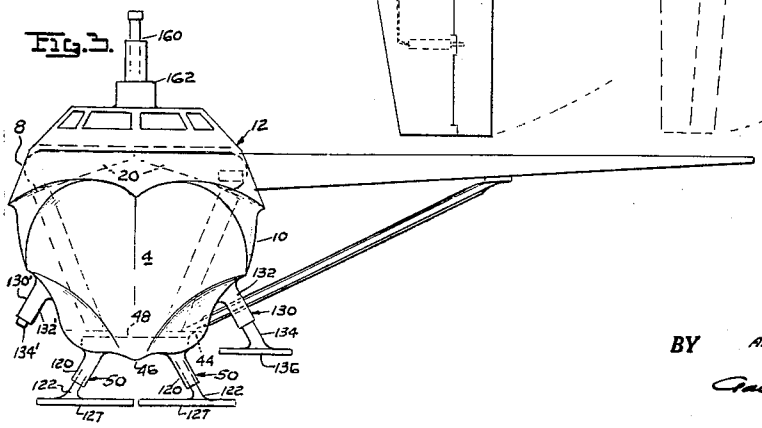

INVENTORS
DICK CARDWELL
BY ADOLPH F. GRAF von SODEN
ATTORNEY

March 26, 1963 D. CARDWELL ETAL 3,082,975

UNDER-SEA AND HEAVIER-THAN-AIR CRAFT OR THE LIKE

Filed Sept. 11, 1961 2 Sheets-Sheet 2

Fig. 5.

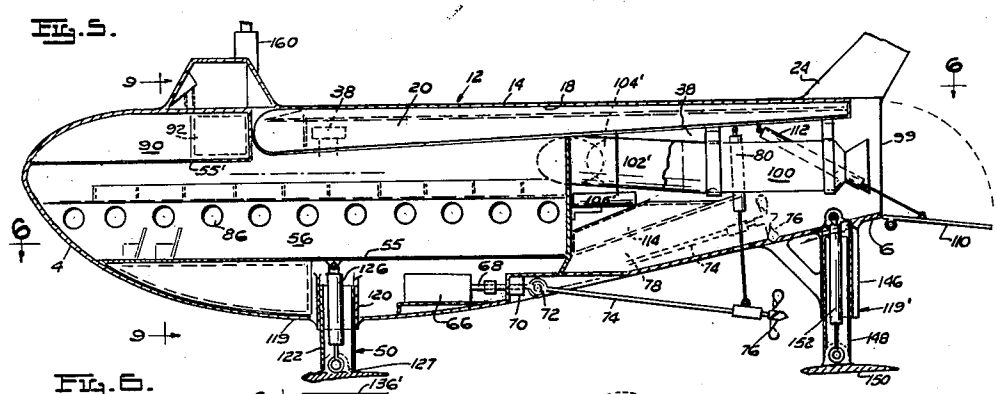

Fig. 6.

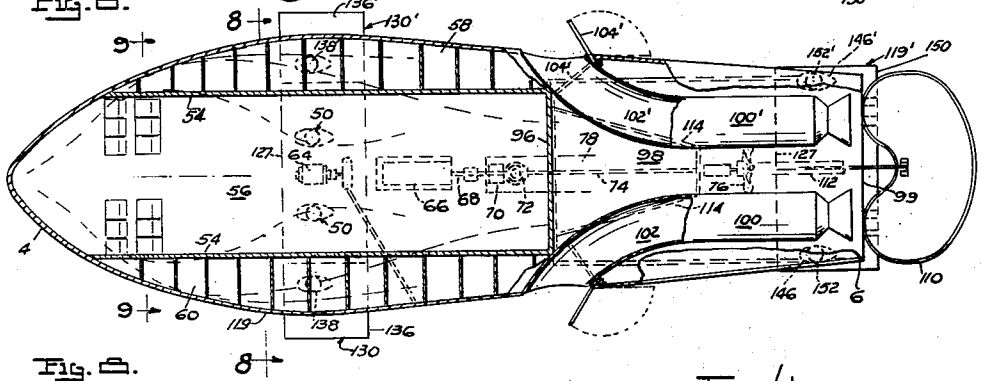

Fig. 8.

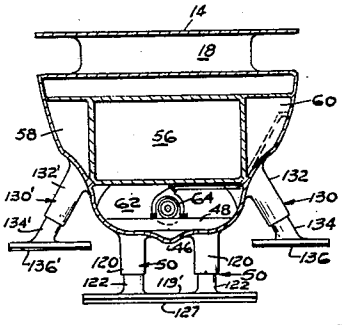

Fig. 12.

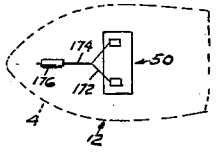

Fig. 4.

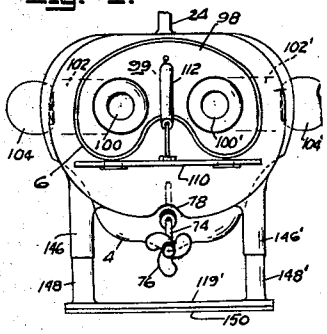

Fig. 11.

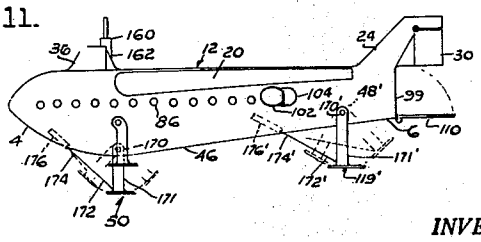

Fig. 9.

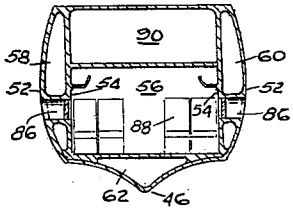

INVENTORS
DICK CARDWELL
ADOLPH F. GRAF von SODEN
BY
ATTORNEY

United States Patent Office 3,082,975 Patented Mar. 26, 1963

3,082,975
UNDER-SEA AND HEAVIER-THAN-AIR CRAFT OR THE LIKE

Dick Cardwell, 5118 Hilda Road, and Adolph F. Graf Von Soden, 4529 Noyes St., Pacific Beach, both of San Diego, Calif.

Filed Sept 11, 1961, Ser. No. 137,237
4 Claims. (Cl. 244—2)

This invention relates to the undersea and heavier-than-air craft and more particularly to semi-marine vessels, which may be used and employed for securing a transportation of cargo or passengers, including military equipment for whatever purpose it may be required, said vessel to be applicable also for uses as a submerged and close to the surface of water operating craft.

Manifestly an object of the invention is to provide a suitably constructed craft, having a hull and means connected to and associated therewith for directing said craft in a direction as it may be required, and also, having a suitable power means adapted for propelling said craft when submerged under the surface of water, and also for propelling same when floating upon the water surface and, when in the air.

Accordingly, an object of the invention is to provide said craft with a suitable hull or fuselage, said fuselage having means for submerging same under water surface and having means for propelling said hull or fuselage when submerged, also for directing and guiding the course of said submerged craft as required, and also having means for surfacing said submerged craft when necessary and required.

A further object of the invention is to provide said craft with a suitable hull or fuselage, having means for floating said fuselage upon a surface of water, also having suitable means for propelling said fuselage at a high rate of speed, and in addition said fuselage having a set of suitably arranged stabilizers and hydrofoils which are secured thereon and adapted for lifting said hull or fuselage out of the water and for holding same slightly above the water surface for eliminating the drag and skin friction with said fuselage surfaces, and thereby causing said craft to attain a high rate of speed including maneuverability, and when used as a displacement craft.

Another object of the invention is to provide a suitably constructed craft having a hull or fuselage elongated in shape and tapering in diametrical cross-section toward the stern end thereof, said fuselage having a pair of sidewardly extendable and retractable wing structures adapted for supporting said fuselage when in air, also, said fuselage having a suitable power unit mounted therein for propelling and for sustaining said craft in the air when airborne, and in addition said craft having means for landing same upon a body of water, for surface navigation and for submerging, having suitable power means for rendering said craft navigable when in air and in flight and when surfaced upon a body of water.

A further object of the invention is to provide said craft with suitable propulsion means adapted for rendering said craft navigable when submerged within twenty feet of water since the purpose of the invention is not for maintaining deep sea diving operations, also said craft having suitable motive power means for navigating same above the water surface or in flight when in foil-borne position and controlled in its flight by means of hydrofoils associated therewith.

The invention also has for its objects to provide such means that are positive in operation, convenient in use, easily installed in a working position and easily disconnected therefrom, economical in manufacture, relatively simple, and of general superiority and serviceability.

Other and further objects and advantages of the invention as will hereinafter more fully appear, are attained by the construction herein shown on the drawings and described in the specification, forming a part of the application.

Reference is now had to the accompanying drawings, in which the similar reference characters denote the same parts.

In the drawings:

FIG. 1 shows a longitudinal side elevational view of the undersea and heavier-than-air craft.

FIG. 2 shows the top plan view of the craft, taken from the top of FIG. 1, and showing one wing in an extended position.

FIG. 3 shows a front elevational view of the craft, showing same in the direction of arrow 3, in FIG. 2, having one of the wings in an extended position.

FIG. 4, shows the stern end elevational view of the craft.

FIG. 5 shows a transverse longitudinal and partly sectional view of the craft, taken on lines 5—5 of the FIG. 2.

FIG. 6 shows a top plan and partly sectional view of the craft, taken on lines 6—6 of the FIG. 5.

FIG. 7 shows a vertically sectional view of the craft, taken on line 7—7 of the FIG. 2.

FIG. 8 shows a vertically sectional view of the craft, taken on line 8—8 of the FIG. 6, and showing the center hydrofoils in modified position.

FIG. 9 shows another vertically sectional view thereof, taken on line 9—9 of the FIG. 6.

FIG. 10 shows a top plan view of the hull, disclosing the retracted position of said wings, showing same in a modified form.

FIG. 11 shows a fragmentary and side elevational view of the hull including the hydrofoils, showing same angularly adjustable and in modified form.

FIG. 12 shows a top plan view of the hydrofoils, taken in the direction of lines 12—12 from FIG. 11.

Describing the invention more in detail, in its broader aspects, said invention comprises a craft, consisting of a suitable bow section 4 and a stern section 6, also having a starboard side 8 and a portside 10, thus forming a hull or fuselage structure, generally designated by numeral 12.

Said hull or fuselage 12 is elongated in structure, having an upper longitudinal plate or covering 14 which is suitably spaced over the topmost hull section 16 and thereby forming a longitudinal compartment 18 wherein a pair of wing structure members 20 are housed and retained.

Said compartment 18 is open on both sides and extending from the frontward section 22 into said stern section 6, as shown, and thereabove a suitably arranged and upwardly extending fin member 24 is provided which is substantially an integral part of said covering 14, the upper section of which terminating with a horizontal stabilizer 26 having suitable elevator 28 hingedly attached thereto, and thereunder the rearwardly and upwardly extending section of said fin member 24 is provided with a hingedly attached rudder 30.

For the operation of said wing structures 20, including said elevator 28 and said rudder 30, each of said members is provided with suitably actuated hydraulic or pneumatic cylinder 20', 28' and 30' respectively, which are conventional in structure and operable by means of suitable hydraulic or pneumatic controls disposed within a cabin 36 positioned forwardly of said frontward section 22, as shown.

Said pair of wing structures **20** repose longitudinally within said compartment **18** and the front sections of which are provided with and pivotally mounted at the starboard and the portside respectively of said fuselage **12**, each being mounted upon a suitable pivot member **38**, and each is pivotally actuated by means of said hydraulic or pneumatic cylinders previously mentioned, for causing said wing structures **20** to be pivoted sidewardly and outwardly and out of said compartment **18**, as shown in FIGS. 2 and 3.

Said wing structures **20** may, if so desired, be arranged longitudinally within said compartment **18** in an overlaid position, as shown in FIGS. 2 and 7, or, said wing structures may be arranged to lie longitudinally and parallel to each other, so that same may be enclosed within said compartment **18**, as shown in FIG. 3.

Also, each of said wing structures **20** is provided with a pivotally mounted brace or strut **40**, having the upper end **42** pivotally secured to the underside and approximately the mid-section of said wing, while the lowermost end **44** of said brace or strut **40** is pivotally connected to the lower section of said hull or fuselage **12** and in close proximity to a keel structure **46** thereof.

Internally of said keel structure **46** and at the mounting position of said lowermost ends **44** of said braces **40**, a suitable cross bar **48** is provided, which is employed for supporting a pair of front center hydrofoils **50**, each of which extends downwardly therefrom, or, if so desired to be angularly positioned therein as shown in FIGS. 3 and 8.

A part of said hull or fuselage **12** at the front section thereof, comprise an outer and inner wall **52** and **54** respectively, including the flooring **55** and the ceiling plate **55'** disposed therein, thus forming a central compartment **56** and also suitable independently partitioned side enclosures **58** and **60**, wherein a suitable ballast may be stored and be used when submerging said fuselage **12** below the water surface, said enclosures **58** and **60** having conventional and suitable pumping unit (not shown) adapted for expelling said ballast therefrom for surfacing purposes.

Below said flooring **55** of said central compartment **56**, the frontward section or space **62** leading to and terminating at said bow **4** and extending along said keel **46**, may be used for mounting therein a suitable bilge pump **64** and a marine power plant **66** including other craft propulsion gear and mechanism that may be most advantageous and applicable in practice.

Said power plant **66** is provided with a drive shaft **68** and arranged for passing through a suitable packing box **70**, said shaft extending outwardly through said fuselage keel and the extended end of which is provided with a conventional universal joint **72**, to which a shaft extension **74** is connected and which terminates with a suitable propeller member **76**.

The rearwardly extending underside section of said stern **6** and above the entire length of said shaft extension **74** including said propeller member **76** a fuselage recess **78** is provided and adapted for housing said shaft extension and said propeller member therein.

The lowering and elevating of said propeller member **76** into any operable position below said stern section **6** is accomplished by means of a hydraulically actuated cylinder **80**, which is operable by means of suitable control mechanism (not shown) and disposed within said cabin **36** hereinbefore mentioned.

It may be noted, that the craft of the structure herein disclosed is not for the purpose to be used exclusively for deep sea diving operations, since it is precluded to extend the under surface activity of the apparatus within the 25 to 50 feet in depth, therefore the volume of ballast that may be required for such operations is comparatively low, and in volume depending upon the dimensional size or tonnage of the craft in use.

Said central compartment **56** is also provided with a plurality of port holes **86**, each having a tubular enclosure extending to said outer wall **52** of said fuselage, and the space thus provided within said compartment **56** may, if so desired, be utilized for passengers or cargo storage, so that when using said craft for passenger service the suitable chairs **88** may be installed therein, as shown in FIG. 9.

The entry and exits for said passengers and the crew, or the stored cargo may be arranged in a conventional manner that in practice may be most desirable and practicable.

Within said bow section **4** and above said ceiling plate **55'** of said central compartment **56**, a suitable upper enclosure **90** is provided, which may be used for storing cargo, ballast, fuel or air compression tanks **92**, which may be used for the purposes desired, having also a suitable air compressor or accumulator mounted therein (not shown) for replenishing the used supply when in operation.

Said fuselage **12** is also divided by a vertically positioned wall or partition **96** which is disposed past the point of center gravity of the craft for forming a rear wall section of said central compartment **56**, and thus providing a rearward enclosure **98** which extends to the end of said stern section **6**.

Said enclosure **98** is provided with a tail opening **99** disposed at said stern section **6**, which is arranged for housing therein a pair of power units **100** and **100'** having their respective nozzle members positioned in line with the edge of said enclosure **98**, as shown.

It may be noted, that said power units may be mounted therein in pairs, as shown, or that a single power unit may be installed wthin said enclosure **98**, also, that any suitable combinations, types, or pluralities of power units may be employed therein as in practice may be found to be most desirable and be used for the purposes intended.

When a pair of said power units **100** and **100'** are used, as shown in FIGS. 4, 5 and 6, each unit is provided with a suitable air intake conduits **102** and **102'** respectively, and each orifice thereof extends to and terminates at the external surface of said hull or fuselage **12**, and each orifice is provided with a pivotally mounted closure or gate **104** and **104'** respectively, so that same may be swung inwardly into position, for closing said air intake orifices when said craft is used for submerged navigation, and, that said orifices may be opened when said craft is airborne or floating over the water surface.

Each closure or gate **104** and **104'** is hydraulically or pneumatically actuated into its closing or opening position by means of a suitably arranged control cylinder **106** and **106'** respectively, the operation of which is regulated from said cabin **36**.

Also, said discharge or tail opening **99** disposed at the stern section **6** is provided with a suitable hingedly mounted cover **110**, which encloses the entire opening thereof and in operation is actuated by means of a hydraulic cylinder **112** mounted as shown in FIGS. 4, 5 and 6.

When said craft is in readiness for submerging and for under the water surface navigation, said closures or gates **104** and **104'** including said tail cover **110** are closed, for preventing water seepage into said rearward enclosure **98**.

Interiorly and within said enclosure **98** suitable fuel tank or a plurality of tanks **114** are mounted for providing fuel for said power units **100** and **100'** respectively.

It may be noted, that said craft may be operable at high speed when airborne by employing said wings **20** and propelled by said power units **100** and **100'**, also, that said craft may be navigable when floating upon the water surface and using said propeller **76** operable by means of said motor **66**, and that said craft may be submerged under the water surface and propelled by means of said propeller **76** or other suitable propelling unit that may be applicable for under water navigation.

In order to accelerate the speed of said craft when float-

ing upon the water surface, said hull **12** is provided with suitable hydrofoils of which a pair of front center hydrofoils **50** are positioned at the forebody section **119** of said hull and also having a pair of stern hydrofoils **119'** at the stern section **6** for securing the best results.

Said hydrofoils **50** and **119'** are provided with a streamline outer shield **120** which is hollow in structure and made an integral part of the underside hull structure, each having a companion shield **122** which is also hollow in cross-section and slidably mounted in said outer shell.

Each of said companion shields **122** and within its hollow section is provided with a suitable hydraulic cylinder **126**, each having a control rod extending downwardly and the end of which is pivotally secured to a plate **127** disposed at the downwardly extending end section of said companion shield **122**, and which is bridged between said pair of hydrofoils as shown, for forming a rigid bridge structure between said respective members.

The upper end of said hydraulic cylinder **126** in each hydrofoil shield **120** and **122** is mounted upon said cross bar **48**, also, said hydraulic cylinders having suitable pipe connections extending to said cabin **36** wherein same are connected to a control panel disposed therein, so that the position of said plate **127** may be elevated or lowered when required.

Also, said forebody section **119** is provided with a pair of control stabilizers **130** and **130'** as shown in FIGS. 6 and 8, which are disposed one at each side and slightly above said pair of front center hydrofoils **50**, each having an outer shield **132** and **132'** and also a companion shield **134** and **134'** slidably mounted one within the other, and the downwardly extending end of each companion shield **134** and **134'** having a stabilizer plate **136** and **136'** secured thereto.

Each of said control stabilizers **130** and **130'** is provided with a hydraulic cylinder **138** and **138'** which is connected in the same manner as herein before described, so that in operation said stabilizer plate **136** and **136'** may be elevated and lowered individually, whereby the maneuverability and sharp turns of the craft may be attained when lifting one stabilizer and depressing the other.

Said pair of stern hydrofoils **119'** disposed at said stern section **6** are employed for maintaining a constant draft of said stern section of said craft when in motion and allowed to skim the water surface.

In structure, said stern hydrofoils **119'** comprise outer shields **146** and **146'** which are positioned vertically in relation to the horizontal axis of the craft and which extend downwardly from said hull **12** at said stern section **6**, as shown in FIG. 4.

Said hydrofoil outer shields **146** and **146'** are also provided with companion shields **148** and **148'** which are slidably mounted within said outer shields and the downwardly extending ends thereof having a common cross bridged plate **150** for connecting both of said companion shields **148** and **148'**, and for forming a rigid bridge structure between said respective members.

Each of said hydrofoils **119** and **119'** is provided with a hydraulic cylinder **152** and **152'** respectively, so that the lowering and elevating of said cross bridged plate **150** may be maintained and controlled in the similar manner as hereinbefore described.

It may then be noted, that said craft when navigably floating upon the water surface may be maintained operable at high speeds and be easily maneuverable, particularly because said bridged plate **150** of said hydrofoil **119'** may be maintained at any desired surface depth, and also for allowing said front center hydrofoil **50** to be suitably controlled and maintained at the desired depth, so that said bow section **4** of said hull **12** may be raised, and thereby eliminating the hull surface water friction.

Also, when said control stabilizers **130** and **130'** are used, by depressing or elevating one or the other individually, thus a variable turn and shift of said craft from one side to the other may be attained, so that, when said starboard stabilizer **130'** is depressed and causing the respective stabilizer plate **136'** to come in contact with water and at the same time causing said portside hydrofoil **130** to become elevated, then said hull **12** will shift its floating position at a sharp angle to the starboard side, and also, when said portside hydrofoil **130** is reversed in the manner herein before described then said hull **12** will turn sharply to the port side particularly when said starboard side stabilizer **130'** is elevated.

Further, when said craft is entirely submerged, the operation of said starboard and portside stabilizers **130'** and **130** is performed in the manner herein above described, then the desired maneuverability of said craft including sharp turns in deep water may be had.

When said craft is submerged for navigational operation and reaches a suitable depth, and also when it is desired to scan the horizon over the water surface and the space thereabove, a suitable periscope apparatus **160** may be provided upon the top section **162** of said cabin **36**, and which, if so desired, may be made retractable and extendable, and also suitably shielded so that the water contact friction may be alleviated.

As shown in FIGS. 11 and 12, said front center hydrofoil structure **50** and said stern hydrofoil structure **119'** are modified in construction, showing same pivotally mounted for securing greater maneuverability of the craft when in submerging and surfacing operations.

To that end, said cross bar **48** disposed below said forebody section **119** and a cross bar **48'** provided at the stern section **6** are each provided with end hinge pins **170** and **170'** respectively, said pins extending outwardly of said hull **12** provide mounting bearings to which the combined bar and hydrofoil plates **171** and **171'** are connected.

Said combined bar and hydrofoil plate **171** and **171'** are each provided with a suitable yoke member **172** and **172'**, to which the respective extension rod **174** and **174'** is connected and which are substantially a part of the respective hydraulic cylinders **176** and **176'** as shown.

Said hydraulic cylinders **176** and **176'** are mounted in a conventional manner within said hull **12** of said craft, and are operable in unison or independently of each other, and in the usual and conventional manner by means of controls and regulators disposed in said cabin **36**, so that variable angular positions which may be frontward or rearward, as shown in dotted lines, may be had when the hydrofoil plates **171** and **171'** are in use and operation.

It may then be noted, that in operation, the angular position of said hydrofoil plates **171** and **171'** may be used for fast and rapid submerging and surfacing operations and also maintaining nearly a horizontal position of said hull **12**.

While this invention is described herein in great particularity, it will be clear that the same may be modified throughout a wide range.

Accordingly, it is not proposed that this invention be limited to the exact details of construction herein shown in the drawings and described in the specification, and that reservations of the rights in practice are made, to the end that any necessary changes and modifications may be made therein, which may come within the scope of the appended claims.

We claim as the invention:

1. In a navigable craft of the class described having a hull consisting of an impermeable elongated body and floatable upon water surface and consisting of a bow section, a starboard side, a portside and a stern section, said hull having a forebody section and a front center hydrofoil extending downwardly therefrom, and said stern section having a stern hydrofoil supported on a pair of telescoping shields and extending downwardly therefrom, a longitudinal compartment upon the top section of said hull extending from a forebody section and terminating in close proximity at said stern section, a pair of wing means pivotally mounted at said forebody section of said hull and within said longitudinal compartment for pivot-

ally and simultaneously extending one at said starboard side and the other at said portside and at approximately right angles to the horizontal center axis of said hull and thereby providing an airborne lift for said craft, a brace connected to and extending from said hull at said starboard side and said portside and connecting said respective wing means for supporting same in extended position and when said craft is skimming over the water surface and when airborne, the combination of, a plurality of side enclosures in the sides said hull independently partitioned for retaining ballast therein and thereby allowing said craft to be submersible and navigable under the water surface, a pair of power units in said stern section of said hull for propelling said craft when airborne, also when floating and skimming upon the water surface and a marine power unit below said stern section having the propeller thereof directed between said downwardly extending pair of telescoping shields of said stern hydrofoil when submerged.

2. In a navigable craft of the class described, as disclosed in claim 1, wherein a central compartment provided and extending in part of said elongated body and frontwardly of said stern section of said hull for securing passengers and cargo storage therein, a plurality of port holes in said port side and said starboard side passing through said side enclosures and communicating with said central compartment, said front center hydrofoil in said forebody section extending downwardly from the bottom of said hull for lifting said bow section and for holding same above the water surface when skimming thereover, said stern hydrofoil extending downwardly from said stern section of said hull for lifting and for holding said stern section above the water surface when skimming thereover, and a pair of side stabilizers one at said starboard side and the other at said port side angularly and sidewardly extending from said forebody of said hull and operable independently of each other and in unison for controlling the turns of said craft to said starboard side and said port side when said craft is in navigable operation at high rate of speed upon the water surface and when submerged.

3. In a navigable craft of the class described as disclosed in claim 1, wherein, said front center hydrofoil is retractable, telescoping side stabilizers are provided, said front and stern hydrofoils and telescoping side stabilizers are connected to said hull for lifting and for holding said craft above the water surface for controlling the maneuverability of said craft when propelled and skimming at high speed upon the water surface and when submerged.

4. In a navigable craft of the class described having in combination an airtight floatable elongated hull, the combination of, a bow section, the starboard side, the port side and a stern section, including a cabin at the top of the forebody of said hull, a longitudinal compartment in said hull extending to and terminating at the stern section thereof, a pair of wing structures pivotally mounted in said longitudinal compartment, a pair of telescoping braces pivotally connected to the sides of said hull and pivotally connecting said wing structures for supporting same when in housed position in said longitudinal compartment and when in outwardly extended position for rendering said craft airborne, a plurality of side enclosures in the sides of said hull independently partitioned therein for retaining ballast therein, a central compartment in said forebody of said hull for providing passengers and cargo storage therein, a plurality of port holes in said port side and said starboard side of said hull passing through said side enclosures and communicating with said central compartment, a pair of hydraulic or pneumatic cylinders in said hull and connecting each respective wing structure for the simultaneous actuation and control of the position of said pair of wing structures and controllable from said cabin, an extendable and contractible front center hydrofoil mounted beneath said forebody of said hull, a pair of hydraulic or pneumatic cylinders connecting said front center hydrofoil for actuating the position thereof and controllable from said cabin, a pair of extendable and contractible stern hydrofoils beneath said stern of said hull, a pair of hydraulic or pneumatic cylinders each connecting said respective hydrofoil for actuating the respective positions thereof and controllable from said cabin, a pair of extendable and contractible stabilizers each mounted at the respective side of said forebody of said hull and above said front center hydrofoil, a pair of hydraulic or pneumatic cylinders connecting said respective stabilizers for actuating same in unison or independently of each other for extending or contracting their respective positions and controllable from said cabin and thereby regulating and controlling the sharp turn and shift of said hull when said craft is submerged or when skimming the water surface, a pair of power units in said stern of said hull for propelling said craft when airborne or when skimming over the water surface, and a marine power unit in said hull connecting a propeller beneath said stern for propelling said craft when skimming over the water surface and when submerged.

References Cited in the file of this patent

UNITED STATES PATENTS

2,444,332	Briggs et al.	June 29, 1948
2,666,602	Holland	Jan. 19, 1954
2,720,367	Doolittle	Oct. 11, 1955
2,980,047	Korganoff et al.	Apr. 18, 1961
2,991,747	Bader et al.	July 11, 1961